LIBRARIES
UNIVERSITY OF WISCONSIN–MADISON

[Hamilton Manufacturing Company patterns, 9/6/90 (?)]. 1890

Two Rivers, Wisconsin: J.E. Hamilton Holly Wood Type Company, 1890

https://digital.library.wisc.edu/1711.dl/7M5XU6NIJJPRY8E

Based on date of publication, this material is presumed to be in the public domain.

For information on re-use see:
http://digital.library.wisc.edu/1711.dl/Copyright

The libraries provide public access to a wide range of material, including online exhibits, digitized collections, archival finding aids, our catalog, online articles, and a growing range of materials in many media.

When possible, we provide rights information in catalog records, finding aids, and other metadata that accompanies collections or items. However, it is always the user's obligation to evaluate copyright and rights issues in light of their own use.

728 State Street | Madison, Wisconsin 53706 | library.wisc.edu

"CASTINGS"

MOLD MARKS
PITS
SLUGS



THE HAMILTON MFG. CO.

DON'T REMOVE THIS LEAF FROM BOOK

IRON TOP PATTERNS

PAT. NO.	B.P. NO.	SIZE
748T	379-C	$1\frac{1}{2}$" x $25\frac{1}{2}$" x $30\frac{1}{2}$" (SMOUSE)
796T		N. G.
800T	004607A	2 x 28 x 60
803T	005851A	1½ x 25 x 36
809T	817S	7 COL 1½ x 23½ x 28½
810T	818S	8 COL 1½ x 25½ x 30½
818T	006614	24 x 26 WATER COOLED
838T	444C	7" x 10" MODEL TOP
976T	15733-A	$25\frac{1}{2}$" x $30\frac{1}{2}$" NEW STYLE

2 SHEETS THIS IS NO. 2

THE HAMILTON MFG. CO.

DON'T REMOVE THIS LEAF FROM BOOK

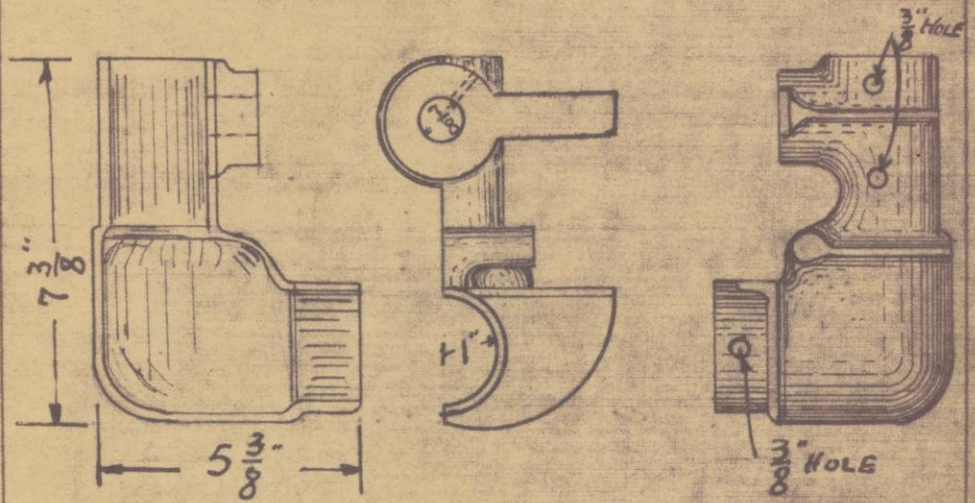

PATTERN NO.

SEE B. P. NO.

THE HAMILTON MFG. CO.

DON'T REMOVE THIS LEAF FROM BOOK

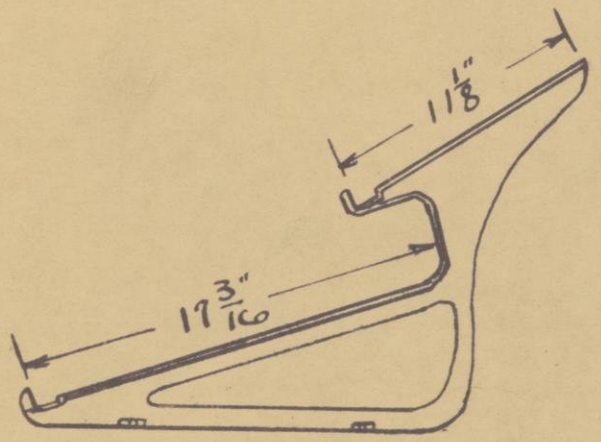

PATTERN NO. K-9

SEE B. P. NO.

THE HAMILTON MFG. CO.

DONT REMOVE THIS LEAF FROM BOOK



N.1. Hamilton Potent Tilting Bracket.

PATTERN NO. 1R

SEE B. P. NO. " " 1L

NO DRAWING

THE HAMILTON MFG. CO.

DONT REMOVE THIS LEAF FROM BOOK

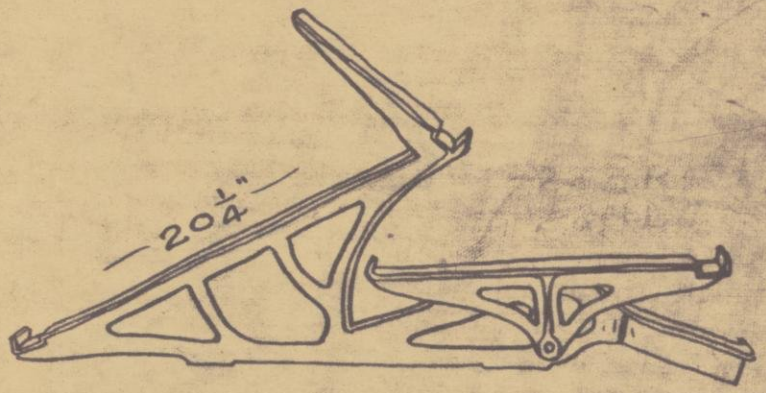

No. 3 Hamilton Patent Three-Case Tilting Bracket.

PATTERN NO. 3R

" " 3L

SEE B. P. NO.
No Drawing

THE HAMILTON MFG. CO.

DONT REMOVE THIS LEAF FROM BOOK

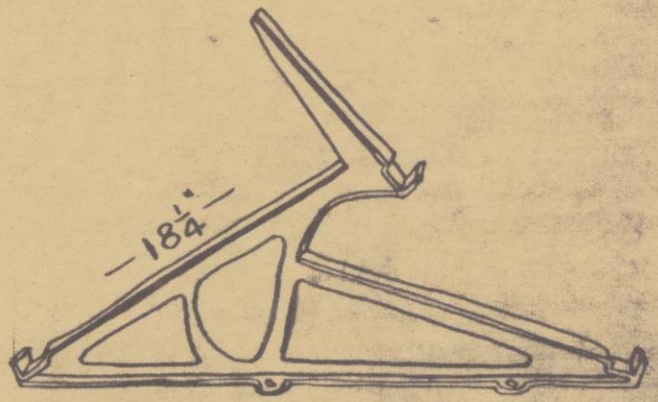

No. 4. Hamilton Three-Case Bracket.

PATTERN NO. 4

SEE B. P. NO.
No Drawing.

THE HAMILTON MFG. CO.

DONT REMOVE THIS LEAF FROM BOOK

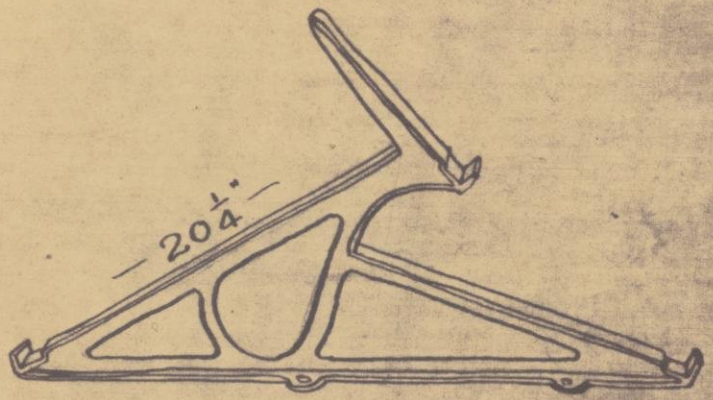

No. 5. Hamilton Three-Case Bracket.

PATTERN NO. 5

SEE B. P. NO.
No Drawing

THE HAMILTON MFG. CO.

DONT REMOVE THIS LEAF FROM BOOK

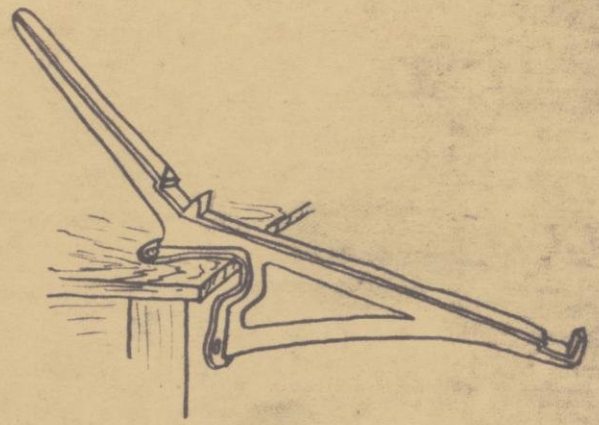

No. 6 Double Case Bracket.

PATTERN NO. 6

SEE B. P. NO.
No Drawing

THE HAMILTON MFG. CO.

DONT REMOVE THIS LEAF FROM BOOK

#2615

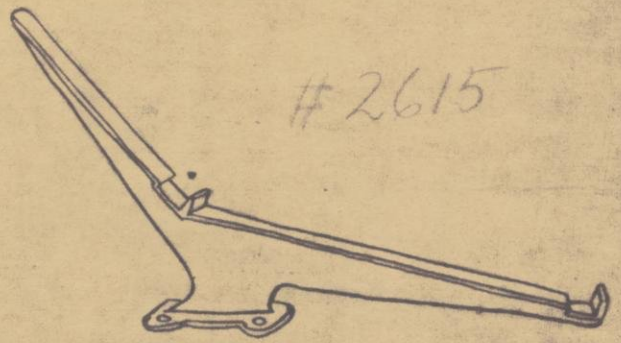

No. 7 Double Case Bracket.

PATTERN NO. 7

SEE B. P. NO.
No Drawing.

THE HAMILTON MFG. CO.

DONT REMOVE THIS LEAF FROM BOOK

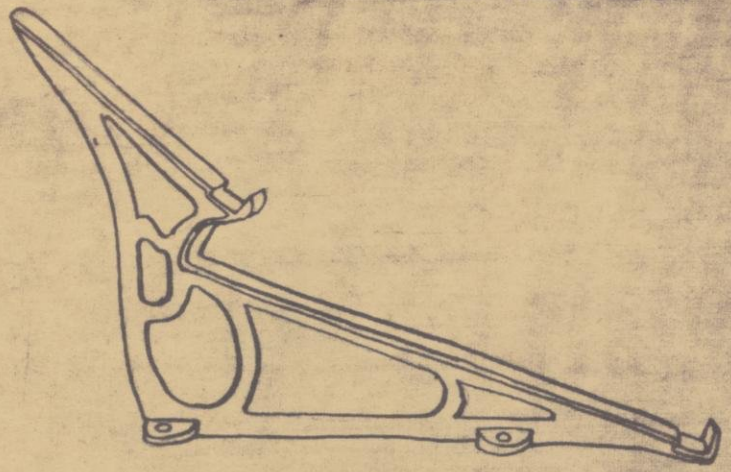

No. 8 Double Case Bracket.

PATTERN NO. 8

SEE B. P. NO.

No Drawing.

THE HAMILTON MFG. CO.

DONT REMOVE THIS LEAF FROM BOOK

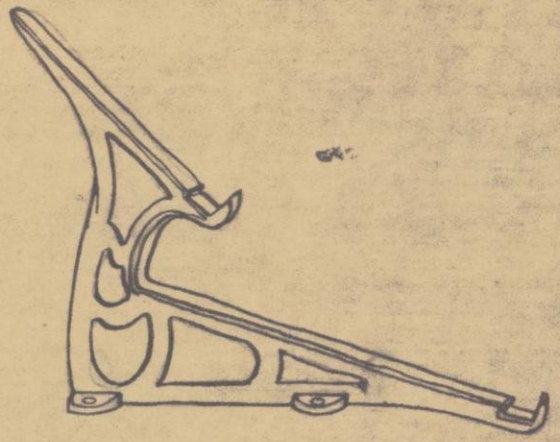

No. 9 New York Case Bracket.

PATTERN NO. 9

SEE B. P. NO. 302-C

THE HAMILTON MFG. CO.

DONT REMOVE THIS LEAF FROM BOOK

1640

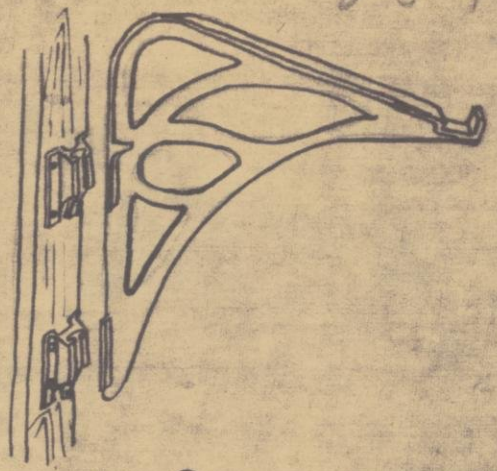

No. 10. Detachable Single Case Bracket.

PATTERN NO. 10

SEE B. P. NO.

No Drawing.

THE HAMILTON MFG. CO.

DONT REMOVE THIS LEAF FROM BOOK

#2620



No. 11. Single Case Bracket.

PATTERN NO. 11

SEE B. P. NO.

No Drawing.

THE HAMILTON MFG. CO.

DONT REMOVE THIS LEAF FROM BOOK

#2673



No. 13 Roller Bracket.

PATTERN NO. 13

SEE B. P. NO.

No Drawing.

THE HAMILTON MFG. CO.

DONT REMOVE THIS LEAF FROM BOOK

No 2650

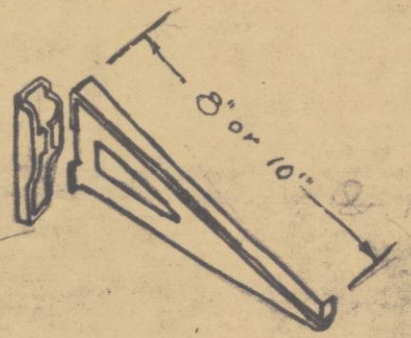

No. 14 Detachable Galley Bracket.

PATTERN NO. 14

SEE B. P. NO.

No Drawing

THE HAMILTON MFG. CO.

DONT REMOVE THIS LEAF FROM BOOK

2660

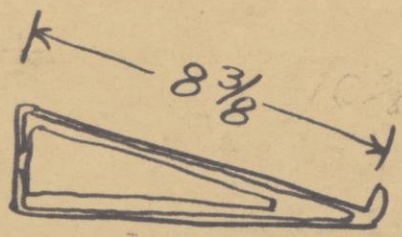

This bracket will fit regular no. 14 socket.

No. 15 Galley Bracket.

PATTERN NO. 15

SEE B. P. NO. —

No Drawing.

THE HAMILTON MFG. CO.

DONT REMOVE THIS LEAF FROM BOOK

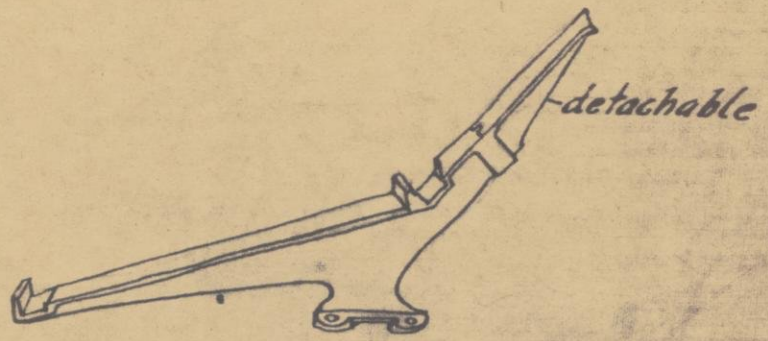

No. 18 Case Bracket with upper arm.

PATTERN NO. 18

SEE B. P. NO.

No Drawing

THE HAMILTON MFG. CO.

DONT REMOVE THIS LEAF FROM BOOK

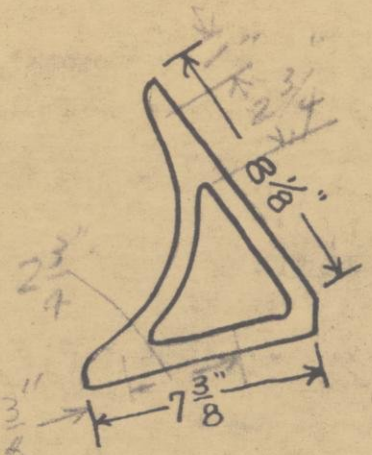

No. 22. Bracket.

PATTERN NO. 22L

SEE B. P. NO. " " 22R

No Drawing.

THE HAMILTON MFG. CO.

DON'T REMOVE THIS LEAF FROM BOOK

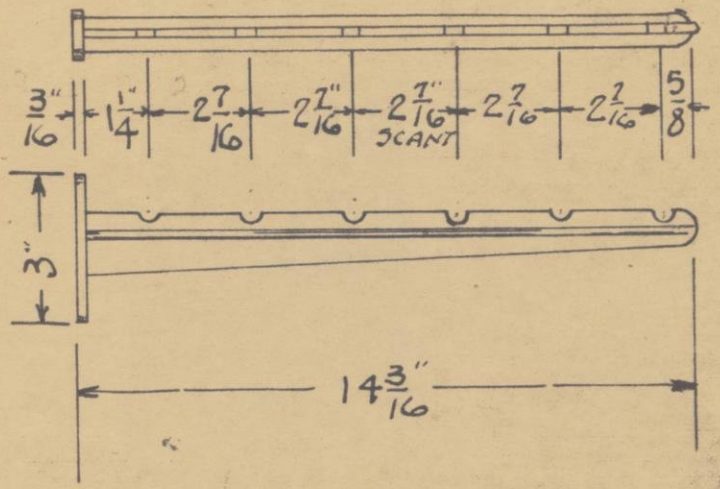

PATTERN NO.

SEE B. P. NO.

THE HAMILTON MFG. CO.

DONT REMOVE THIS LEAF FROM BOOK



No. 39 Creighton Galley shelf Bracket

PATTERN NO. 39

SEE B. P. NO.

No Drawing.

THE HAMILTON MFG. CO.

DONT REMOVE THIS LEAF FROM BOOK

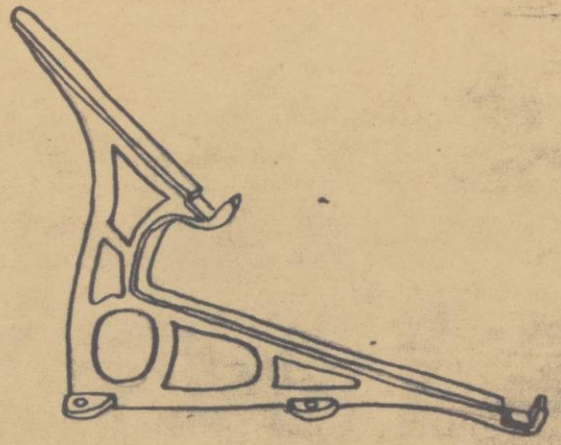

No. 40 Double Case Bracket.

PATTERN NO. 40

SEE B. P. NO.

No Drawing.

THE HAMILTON MFG. CO.

DONT REMOVE THIS LEAF FROM BOOK

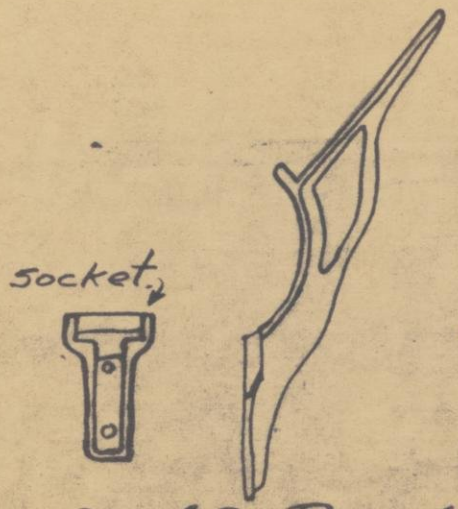

No. 42. Bracket.

PATTERN NO. 42

SEE B. P. NO.

No Drawing

THE HAMILTON MFG. CO.

DONT REMOVE THIS LEAF FROM BOOK

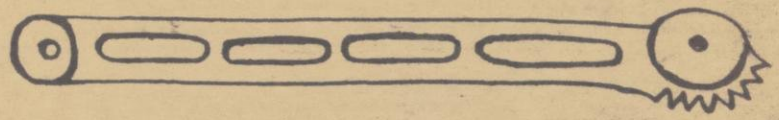

Part for Dental Bracket-No 1

PATTERN NO. 100

SEE B. P. NO.

No Drawing

THE HAMILTON MFG. CO.

DONT REMOVE THIS LEAF FROM BOOK

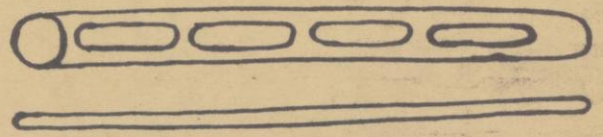

Part for Dental Bracket-No 1

PATTERN NO. 101

SEE B. P. NO.

No Drawing.

THE HAMILTON MFG. CO.

DONT REMOVE THIS LEAF FROM BOOK



Pattern-103



Pattern-102.

Parts for Dental Bracket-Gated Pattern. No 1

PATTERN NO. 102

SEE B. P. NO. " " 103

No Drawing

THE HAMILTON MFG. CO.

DONT REMOVE THIS LEAF FROM BOOK



Part for Dental Bracket No. 1 - Gated Pat - 2 Castings

PATTERN NO. 104
105

SEE B. P. NO.

No Drawing.

THE HAMILTON MFG. CO.

DONT REMOVE THIS LEAF FROM BOOK

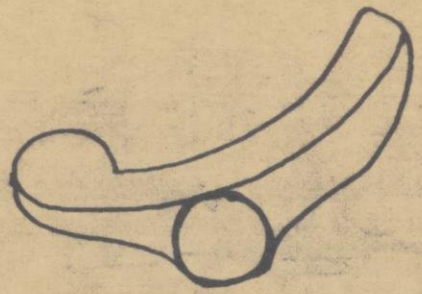

Part for Dental Bracket - No. 1

PATTERN NO. 106

SEE B. P. NO.

No Drawing

THE HAMILTON MFG. CO.

DONT REMOVE THIS LEAF FROM BOOK

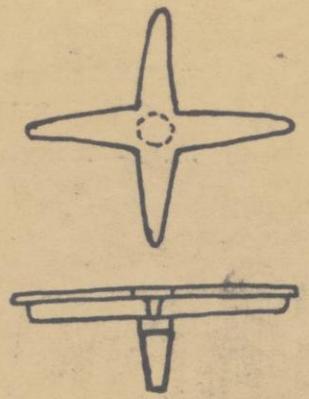

Part for Dental Bracket No 1

PATTERN NO. 107

SEE B. P. NO.

No Drawing

THE HAMILTON MFG. CO.

DONT REMOVE THIS LEAF FROM BOOK

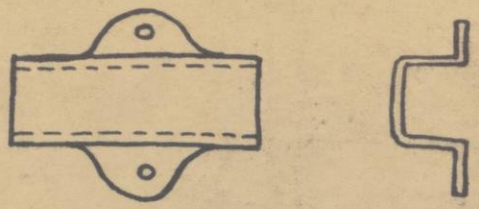

Part for Dental Bracket - No 1

PATTERN NO. 108.

SEE B. P. NO.

No Drawing

THE HAMILTON MFG. CO.

DONT REMOVE THIS LEAF FROM BOOK

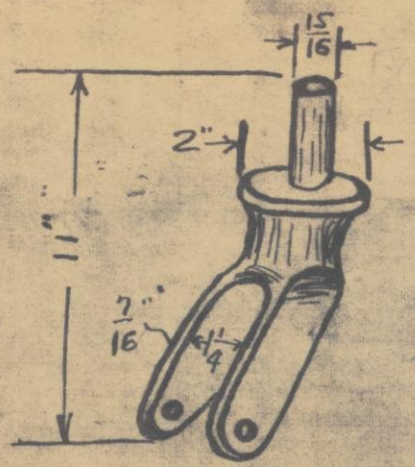

Fork for Style "A" Caster.

PATTERN NO. 109

SEE B. P. NO 166-C

THE HAMILTON MFG. CO.

DONT REMOVE THIS LEAF FROM BOOK

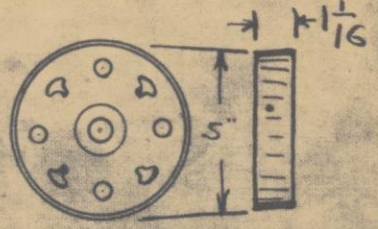

5" Dia Wheel for Style "A" Caster.

SEE B P NO. 167-C

PATTERN NO. 110

THE HAMILTON MFG. CO.

DONT REMOVE THIS LEAF FROM BOOK

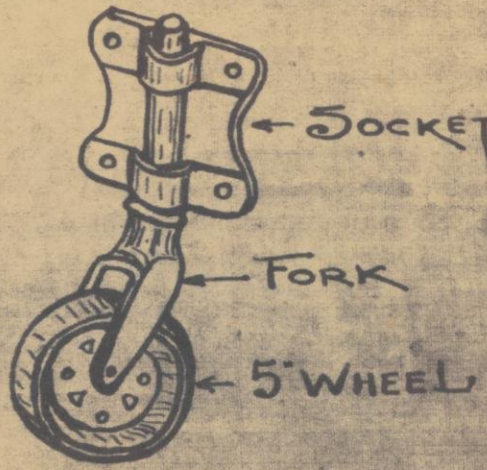

Style - "A" Swivel Caster

PATTERN NO. STYLE - "A"

SEE B. P. NO. 167C-A

THE HAMILTON MFG. CO.

DONT REMOVE THIS LEAF FROM BOOK

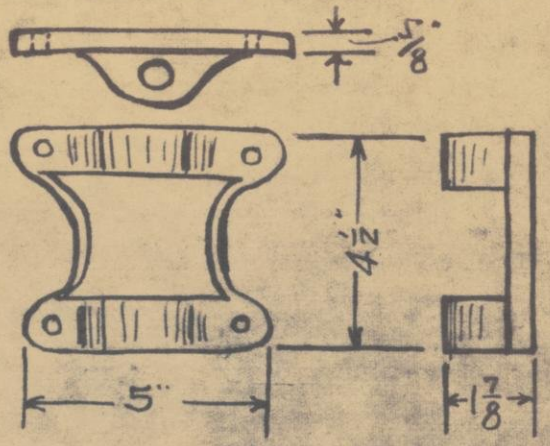

Socket for Fork of Style "A" Caster.

PATTERN NO. 111

SEE B. P. NO. 165-C

THE HAMILTON MFG. CO.

DON'T REMOVE THIS LEAF FROM BOOK

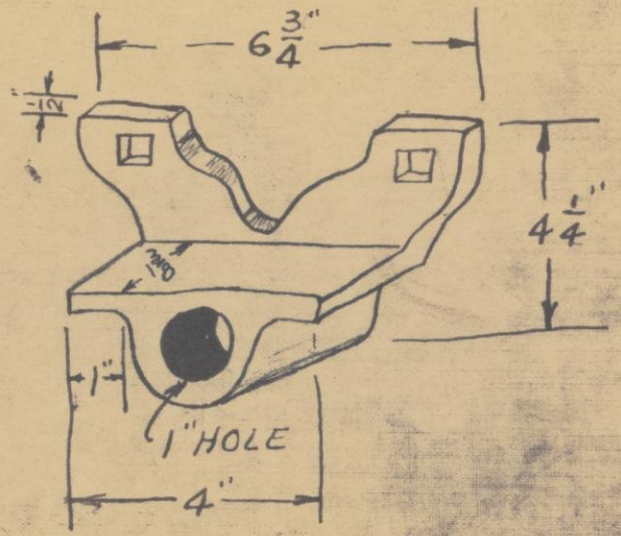

SHAFT BEARING FOR PRINTERS TRUCKS

PATTERN NO. 112

SEE B. P. NO. 164-C

THE HAMILTON MFG. CO.

DONT REMOVE THIS LEAF FROM BOOK



Poster Stick Knee Clamp - Gated Pat - 8 Castings

PATTERN NO. 113

SEE B. P. NO.
No Drawing.

THE HAMILTON MFG. CO.

'DON'T REMOVE THIS LEAF FROM BOOK

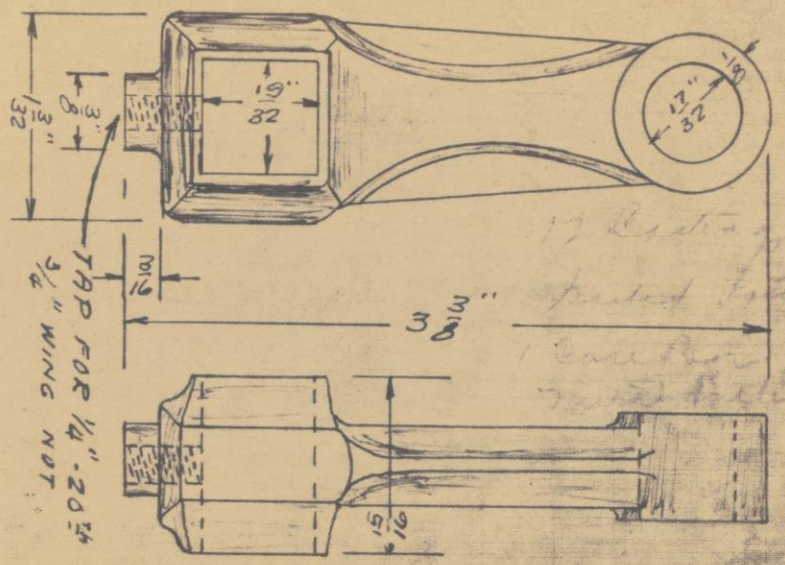

CASTING FOR HAND ROLLERS

PATTERN NO. 114

SEE B. P. NO. 336-C

THE HAMILTON MFG. CO.

DONT REMOVE THIS LEAF FROM BOOK

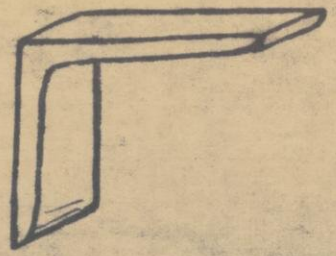

Poster Stick Knee-Gated Pattern-6 Castings.

PATTERN NO. 115

SEE B. P. NO.
No Drawing.

THE HAMILTON MFG. CO.

DONT REMOVE THIS LEAF FROM BOOK

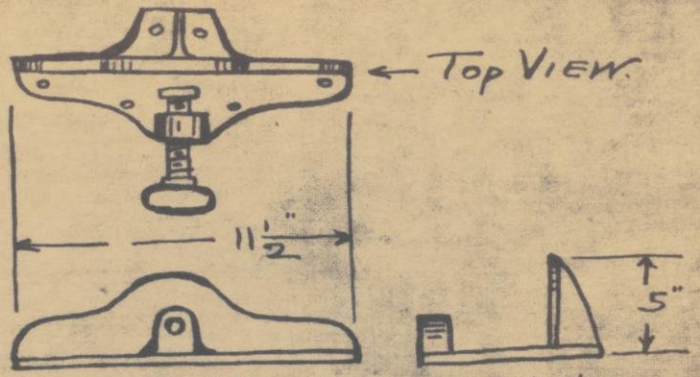

Part for Finishing Stand.

PATTERN NO. 116

SEE B. P. NO. 416-C ~~No Drawing~~

THE HAMILTON MFG. CO.

DONT REMOVE THIS LEAF FROM BOOK

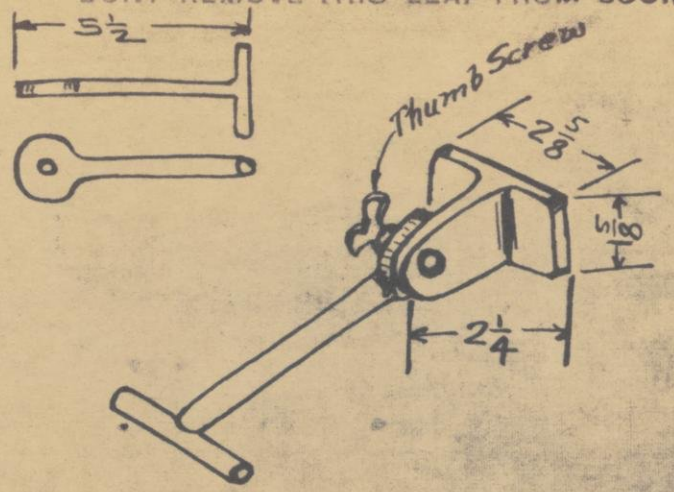

Part for Finishing Stand.

PATTERN NO. 117

SEE B. P. NO. 417-C
No Drawing

THE HAMILTON MFG. CO.

DONT REMOVE THIS LEAF FROM BOOK

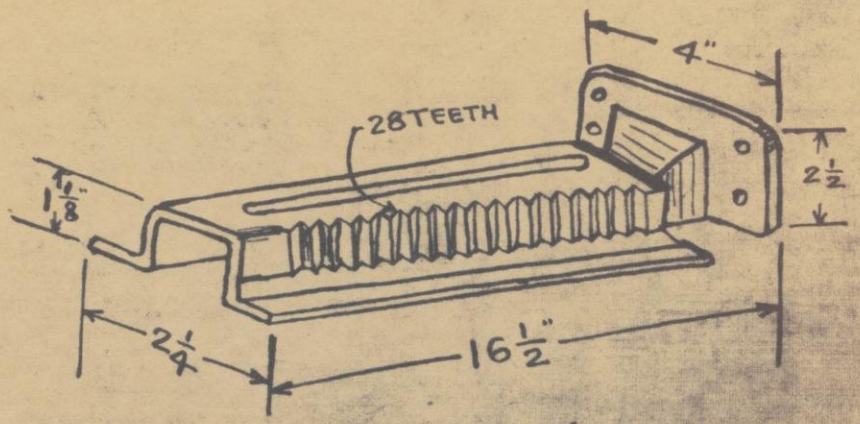

Part for Stuart Finishing Stand.

PATTERN No. 118

SEE B. P. NO.
No Drawing

THE HAMILTON MFG. CO.

DONT REMOVE THIS LEAF FROM BOOK

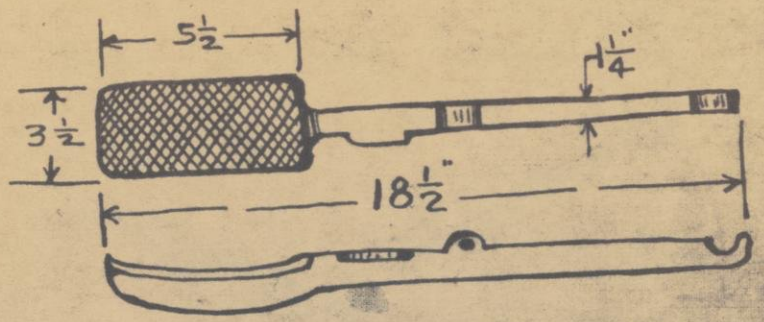

Part for Stuart Finishing Stand

PATTERN NO. 119

SEE B. P. NO.
no drawing

THE HAMILTON MFG. CO.

DONT REMOVE THIS LEAF FROM BOOK

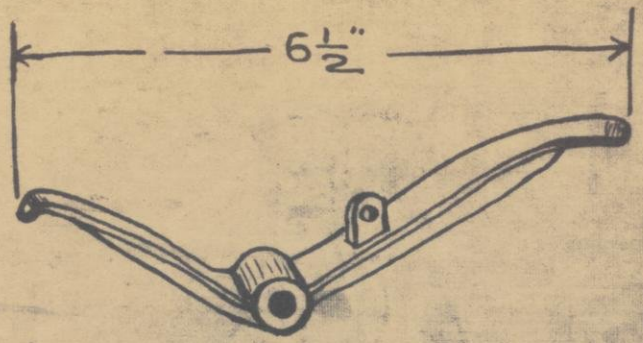

Part for Stuart Finishing Stand

PATTERN NO. 120

SEE B. P. NO.
No Drawing.

A

THE HAMILTON MFG. CO.

DONT REMOVE THIS LEAF FROM BOOK

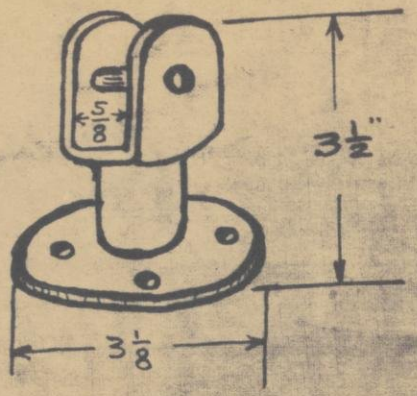

Part for Stuart Finishing Stand

PATTERN NO. 121

SEE B. P. NO.
No Drawing.

THE HAMILTON MFG. CO.

DONT REMOVE THIS LEAF FROM BOOK

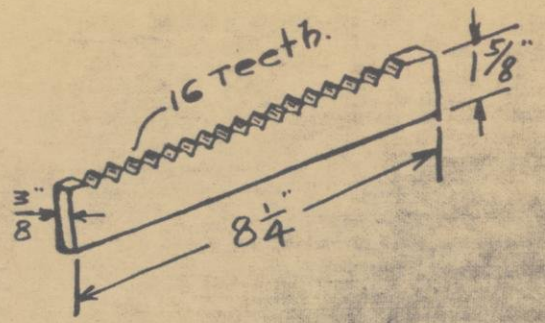

Part for Stuart Finishing Stand.

PATTERN NO. 122

SEE B. P. NO.
No Drawing.

THE HAMILTON MFG. CO.

DONT REMOVE THIS LEAF FROM BOOK

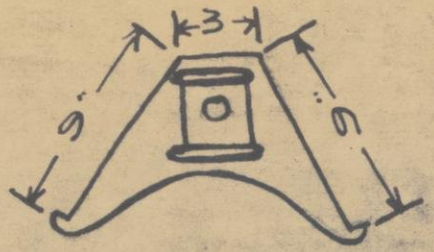

Bracket for Overhead - for 1/4 pipe

PATTERN NO. 300

SEE B. P. NO. - 3-C.

THE HAMILTON MFG. CO.

DONT REMOVE THIS LEAF FROM BOOK

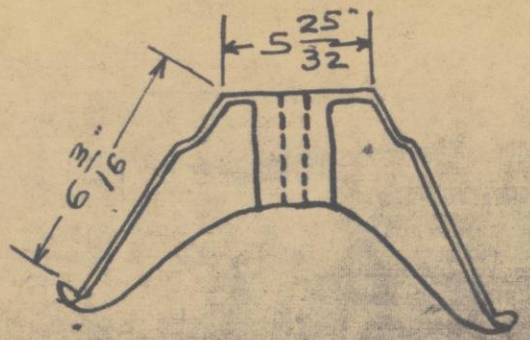

Intermediate Bracket

PATTERN NO. 301-S

SEE B. P. NO. 4-C

THE HAMILTON MFG. CO.

DONT REMOVE THIS LEAF FROM BOOK

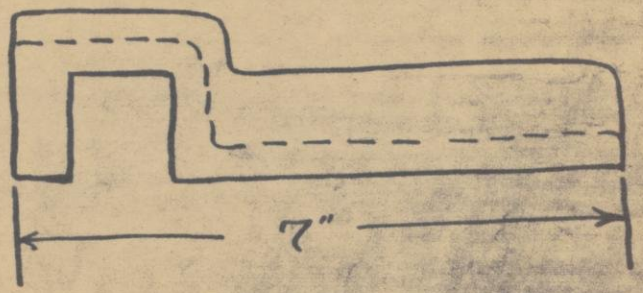

Galley Stop.

PATTERN NO. 307

SEE B. P. NO. 25-C.

THE HAMILTON MFG. CO.

DONT REMOVE THIS LEAF FROM BOOK

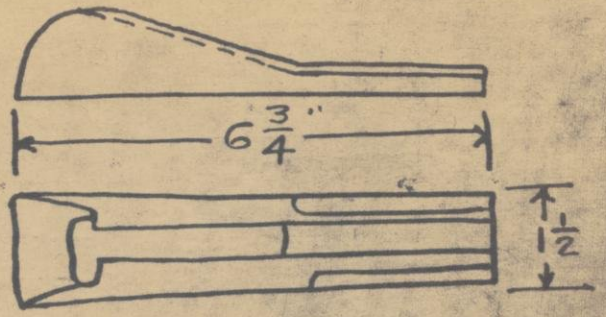

Socket for Galley Dump or Foot Rail Brk't

PATTERN NO. 308

SEE B. P. NO. 26-C.

No Drawing

THE HAMILTON MFG. CO.

DON'T REMOVE THIS LEAF FROM BOOK

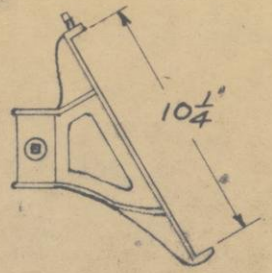

FOR $\frac{3}{4}$"-PIPE

10" CASE BRACKET

PATTERN NO. 314

SEE B. P. NO. 2-C

8-20-25 REV. CHANGED FROM 9" TO 10"

THE HAMILTON MFG. CO.

DONT REMOVE THIS LEAF FROM BOOK

FOR $1\frac{1}{4}$ PIPE SEE PAT. 378

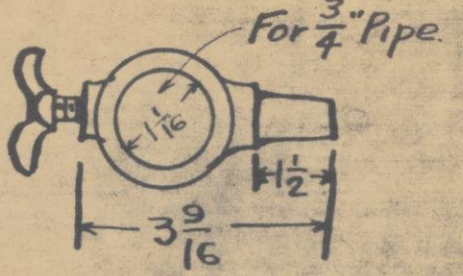

Fitting for Copy Hook Bar.

PATTERN NO. 315

SEE B. P. NO. -2-C.

THE HAMILTON MFG. CO.

DONT REMOVE THIS LEAF FROM BOOK

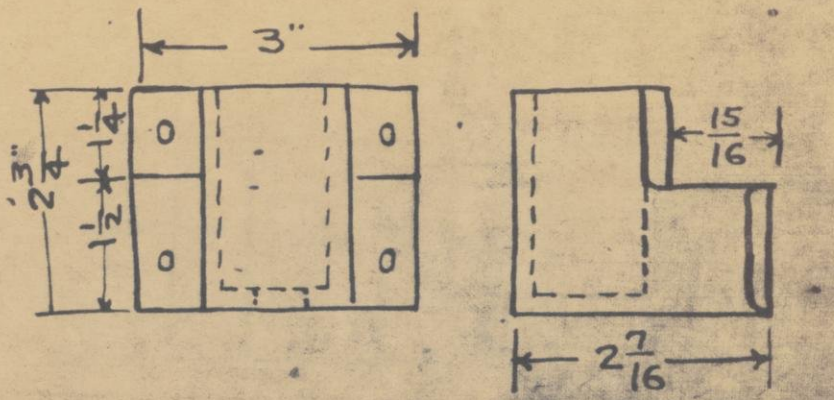

Socket for 3/4" Pipe - 15/16" Overhang

PATTERN NO. 316

SEE B. P. NO.-2-C

THE HAMILTON MFG. CO.

DONT REMOVE THIS LEAF FROM BOOK

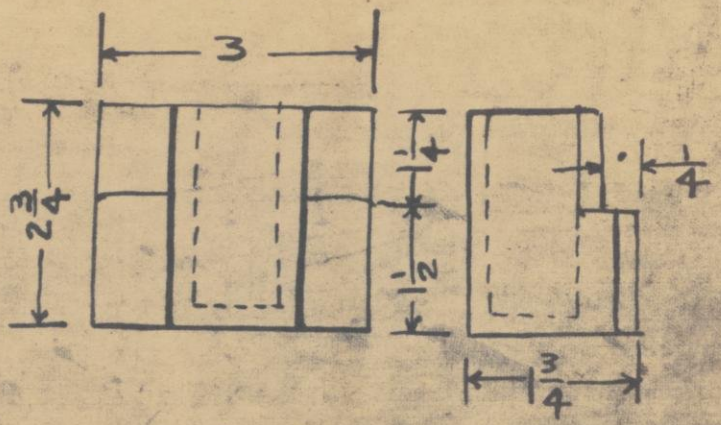

Socket for $\frac{3}{4}$" Pipe — $\frac{1}{4}$" Overhang

PATTERN NO. 317

SEE B. P. NO. 15-C.

THE HAMILTON MFG. CO.

DONT REMOVE THIS LEAF FROM BOOK

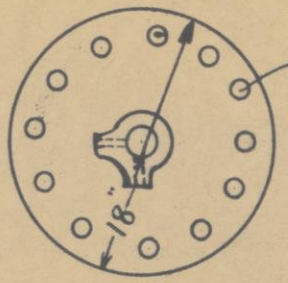

Top Disk of Revolving Roller Rack.

PATTERN NO. 324

SEE B. P. NO.-21-C

No Drawing

THE HAMILTON MFG. CO.

DONT REMOVE THIS LEAF FROM BOOK

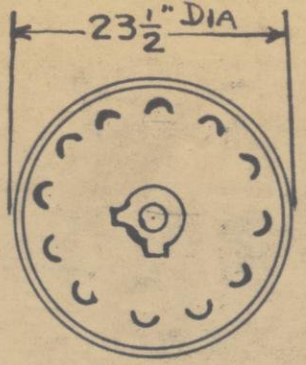

Bottom Disk of Revolving Roller Rack

PATTERN NO. 325

SEE B. P. NO.-21-C.

THE HAMILTON MFG. CO.

DONT REMOVE THIS LEAF FROM BOOK

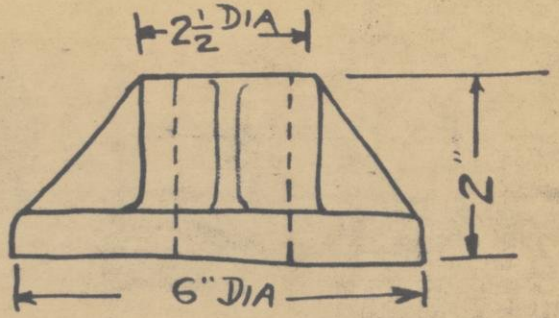

Top Flange for Roller Rack

PATTERN NO. 326

SEE B. P. NO. 21-C.

THE HAMILTON MFG. CO.

DONT REMOVE THIS LEAF FROM BOOK

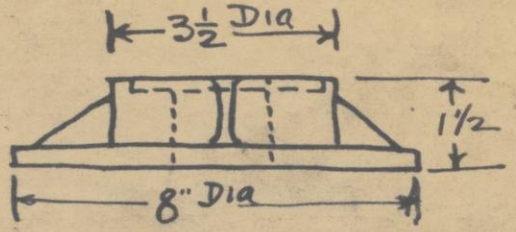

Bottom Flange for Roller Rack

PATTERN NO. 327

SEE B. P. NO.- 21-C.

THE HAMILTON MFG. CO.

DONT REMOVE THIS LEAF FROM BOOK

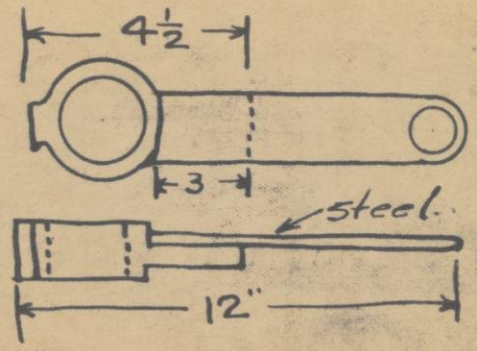

Adjustable Arm for Roller Rack

PATTERN NO. 328

SEE B. P. NO. - 21-C.

THE HAMILTON MFG. CO.

DONT REMOVE-THIS LEAF FROM BOOK

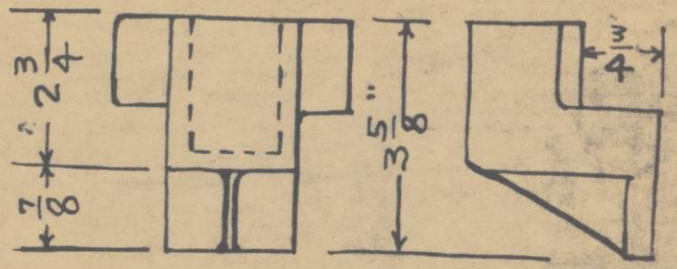

Socket with $\frac{3}{4}$" Offset for $\frac{3}{4}$" Pipe

PATTERN NO. 330

SEE B. P. NO. -1-c

THE HAMILTON MFG. CO.

DONT REMOVE THIS LEAF FROM BOOK

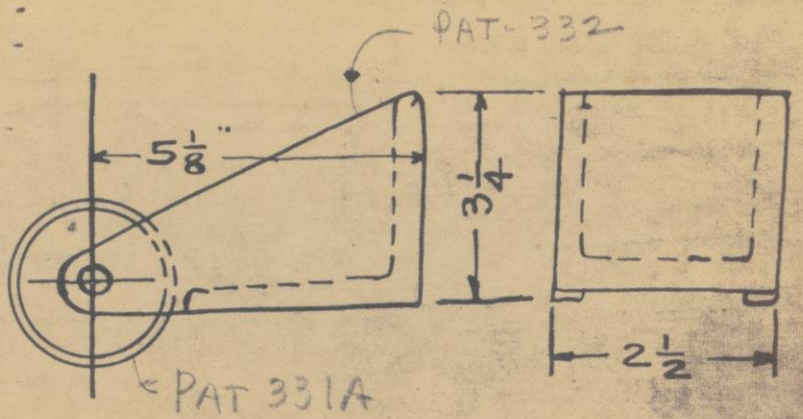

Back Caster for Magazine Drawer

PATTERN NO. 332

SEE B. P. NO.-5-C.

THE HAMILTON MFG. CO.

DONT REMOVE THIS LEAF FROM BOOK

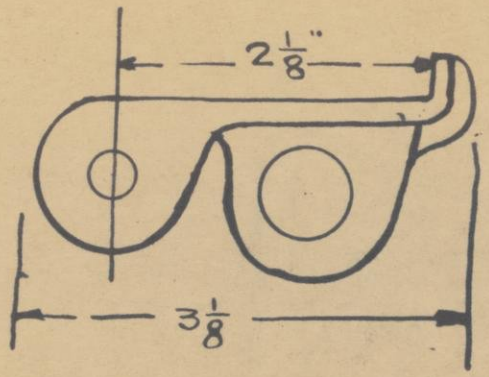

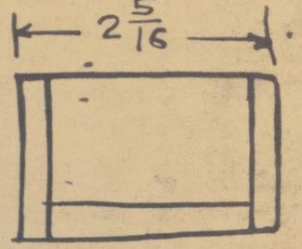

Magazine Drawer Stop

PATTERN NO. 333-S

SEE B. P. NO.-16-C.

THE HAMILTON MFG. CO.

DONT REMOVE THIS LEAF FROM BOOK

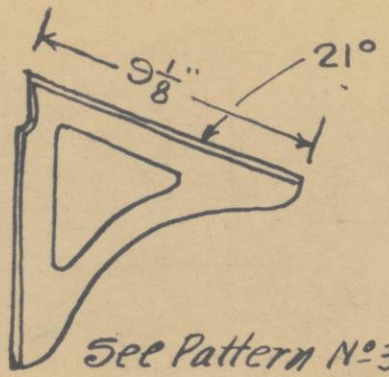

See Pattern No. 308 for Socket

Galley Dump Bracket.

PATTERN NO. 337-S.

SEE B. P. NO.-30-C.

THE HAMILTON MFG. CO.

DONT REMOVE THIS LEAF FROM BOOK

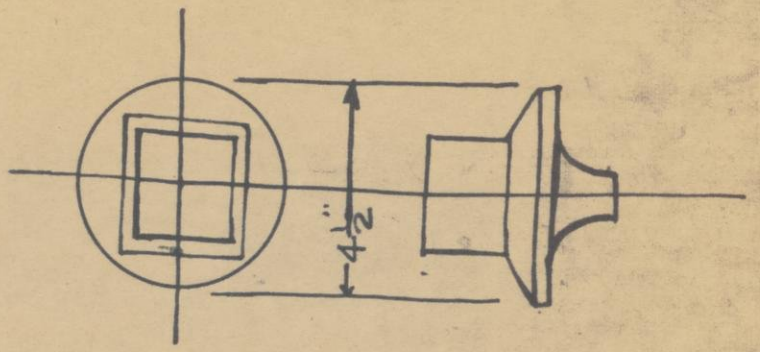

Flange for Style 87½ No. 112 Caster - Angle Legs

PATTERN NO. - 339-S

SEE B. P. NO. - 31-C.

THE HAMILTON MFG. CO.

DON'T REMOVE THIS LEAF FROM BOOK

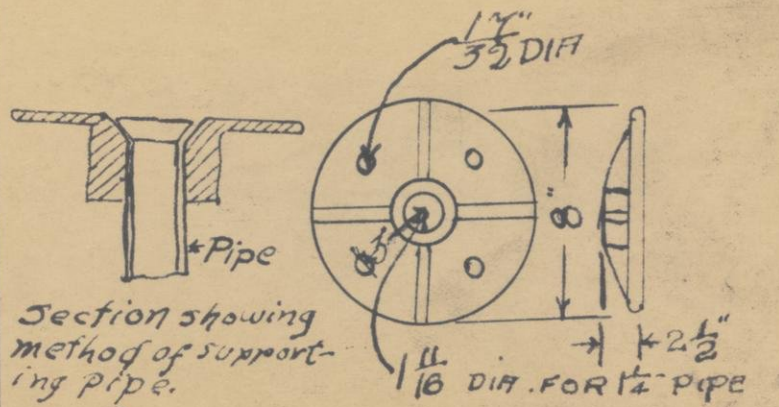

Section showing method of supporting pipe.

8 inch Ceiling flange for 1¼" pipe.

SEE B. P. NO. 285 PATTERN NO. 351

THE HAMILTON MFG. CO.

DONT REMOVE THIS LEAF FROM BOOK



Bracket for Auxiliary Banks - for 1" Pipe

PATTERN NO. 354

SEE B. P. NO. 44-C.

THE HAMILTON MFG. CO.

DONT REMOVE THIS LEAF FROM BOOK

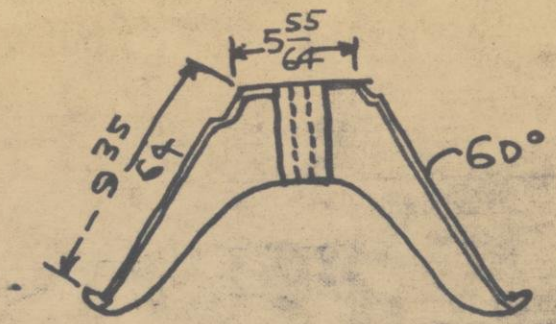

For End Bracket See PAT 355

Intermediate Bracket for 12" Overhead Banks

PATTERN NO. 356-S

SEE B. P. NO. 45-C.

THE HAMILTON MFG. CO.

DON'T REMOVE THIS LEAF FROM BOOK

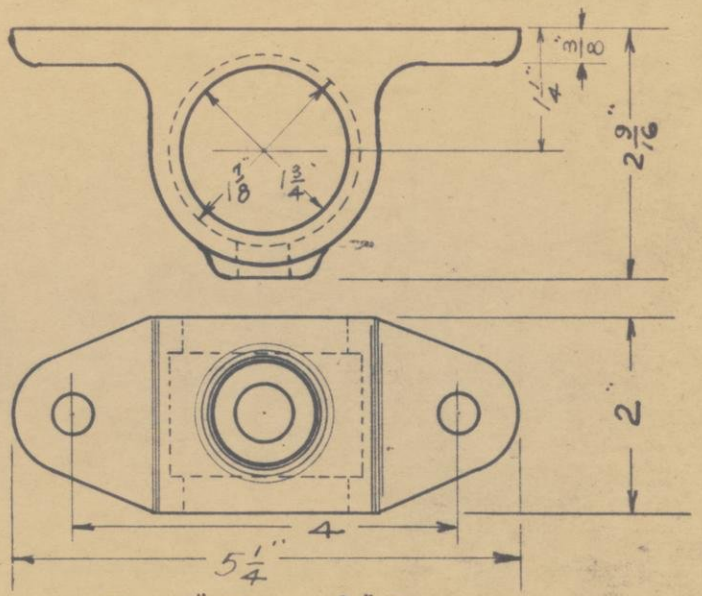

Socket For 1¼" Pipe (⅜" Projection.)

PATTERN NO. 357.

SEE B. P. NO. 46-C.

THE HAMILTON MFG. CO.

DONT REMOVE THIS LEAF FROM BOOK

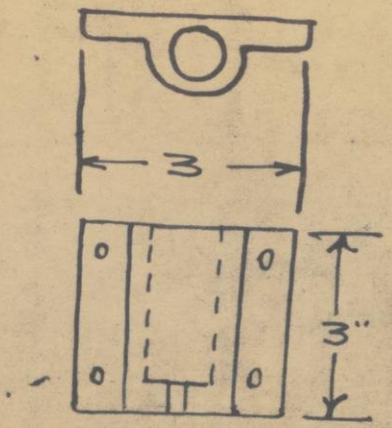

Socket for $\frac{3}{4}$" Pipe. $\frac{1}{4}$" Overhang

PATTERN NO. 370

SEE B. P. NO. 59-C

THE HAMILTON MFG. CO.

DONT REMOVE THIS LEAF FROM BOOK

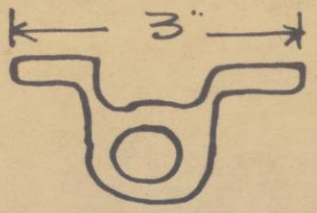

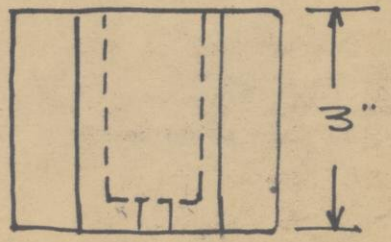

Socket for $\frac{3}{4}$" Pipe - $\frac{7}{8}$" Overhang

PATTERN NO. 371

SEE B. P. NO. 60-C.

THE HAMILTON MFG. CO.

DONT REMOVE THIS LEAF FROM BOOK

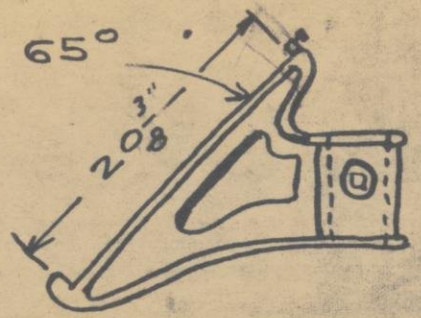

20"-Bracket for 1¼ Pipe.

PATTERN NO. 374

SEE B. P. NO. 63-C.

REV. 8-20-25 ADDED SET SCREW

THE HAMILTON MFG. CO.

DONT REMOVE THIS LEAF FROM BOOK

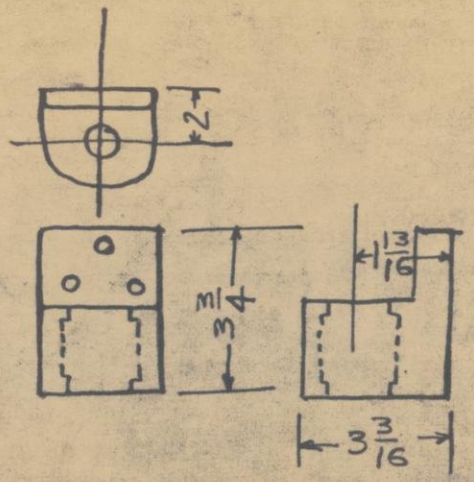

Socket for 1¼" Pipe for 1 3/16" Overhang.

PATTERN NO. 375

SEE B. P. NO. 64-C.

THE HAMILTON MFG. CO.

DONT REMOVE THIS LEAF FROM BOOK



Bracket for 12 & 4" Case 1¼ pipe.

PATTERN NO. 377

REV. BRACKET 8/20/25
ADDED SET SCREW

SEE B. P. NO. 66-C

THE HAMILTON MFG. CO.

DONT REMOVE THIS LEAF FROM BOOK

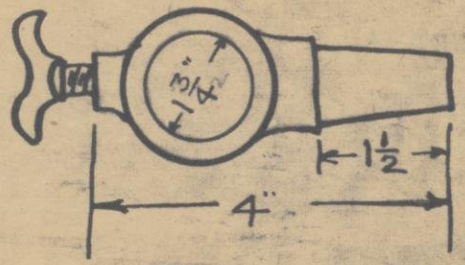

Fitting for Adjustable Copy Hook Rack for ¼ pipe

PATTERN NO. 378

SEE B. P. NO. 67-C.

THE HAMILTON MFG. CO.

DONT REMOVE THIS LEAF FROM BOOK

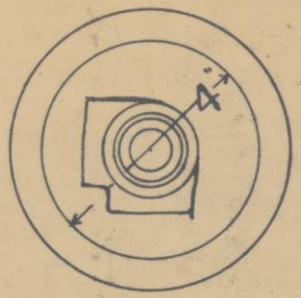

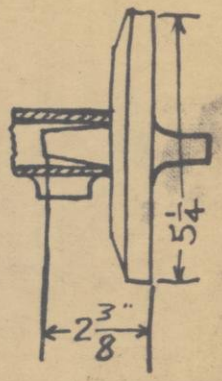

Flange for Style 87 No 142 Caster for ¼ Fitting

PATTERN NO. 379

SEE B. P. NO. 68-C.

THE HAMILTON MFG. CO.

DONT REMOVE THIS LEAF FROM BOOK

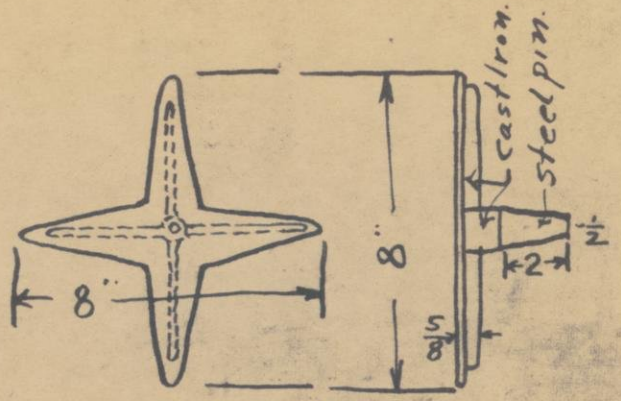

Tray Support for Operating Table No. 1.

PATTERN NO. 382

SEE B. P. NO. 71-C.

THE HAMILTON MFG. CO.

DONT REMOVE THIS LEAF FROM BOOK

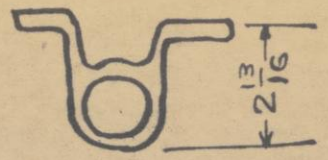

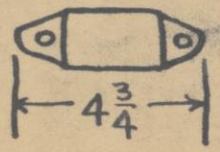

Socket for 1" Pipe for 1 1/16" Projection

PATTERN NO. 383

SEE B. P. NO.-72-C.

THE HAMILTON MFG. CO.

DONT REMOVE THIS LEAF FROM BOOK

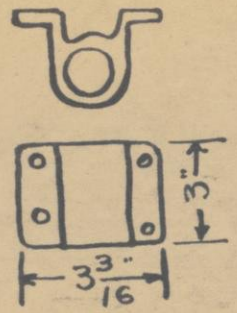

Socket for $\frac{3}{4}$" Pipe for $1\frac{1}{8}$" projection

PATTERN NO. 388

SEE B. P. NO. -77-C.

THE HAMILTON MFG. CO.

DONT REMOVE THIS LEAF FROM BOOK



Fork for Dumping Truck.

PATTERN NO. 390-S

SEE B. P. NO. -79-C.

No Drawing

THE HAMILTON MFG. CO.

DONT REMOVE THIS LEAF FROM BOOK

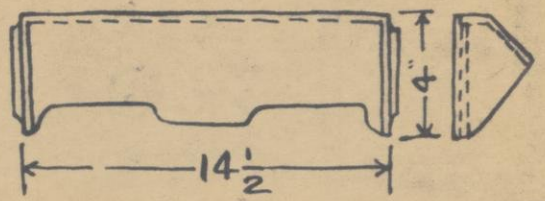

Rail for Dumping Truck #850

PATTERN NO. 391-S.

SEE B. P. NO. 80-C.

No Drawing

THE HAMILTON MFG. CO.

DONT REMOVE THIS LEAF FROM BOOK

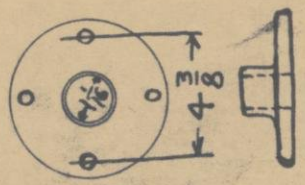

Collar for Dumping Truck Shaft.

PATTERN NO. 392-S

SEE B. P. NO. 81-C.

No Drawing

THE HAMILTON MFG. CO. No.

DONT REMOVE THIS LEAF FROM BOOK

PRINT

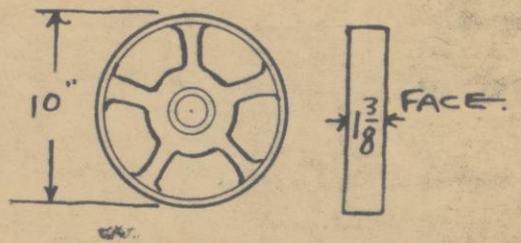

10" Wheel with 1 3/8" Face.

PATTERN NO. 393

SEE B. P. NO. 82-C.

No Drawing

THE HAMILTON MFG. CO.

DONT REMOVE THIS LEAF FROM BOOK

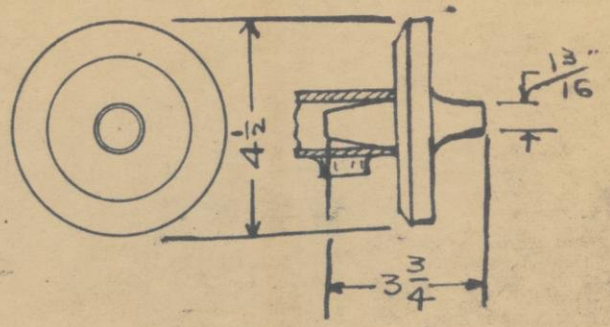

Flange for Style 87 N° 112 Casters - 1½ fitting

PATTERN NO. 3955

SEE B. P. NO. 84-C.

THE HAMILTON MFG. CO.

DONT REMOVE THIS LEAF FROM BOOK

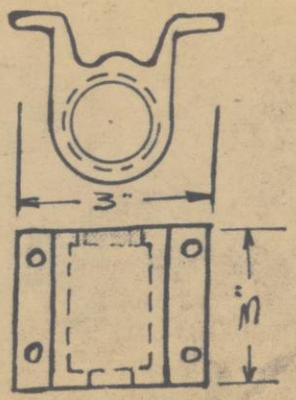

Socket for ½" Pipe for 1" Overhang.

PATTERN NO. 396

SEE B. P. NO. 85-C.

THE HAMILTON MFG. CO.

DONT REMOVE THIS LEAF FROM BOOK

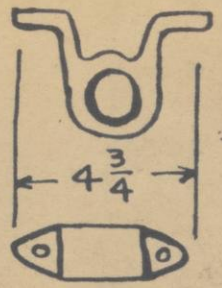

Flange for $\frac{3}{4}$" Pipe - $1\frac{1}{8}$ projection

PATTERN NO. 399

SEE B. P. NO. No Drawing

THE HAMILTON MFG. CO.

DONT REMOVE THIS LEAF FROM BOOK

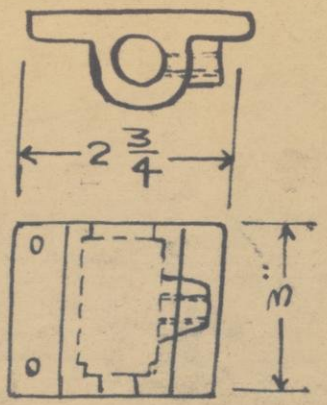

Socket for 1/2" Pipe for 1/4" Projection

PATTERN NO.-404

SEE B. P. NO.-91-C

THE HAMILTON MFG. CO.

DON'T REMOVE THIS LEAF FROM BOOK

REV. 11-27-51 LENGTH WAS 3¾" NEW.

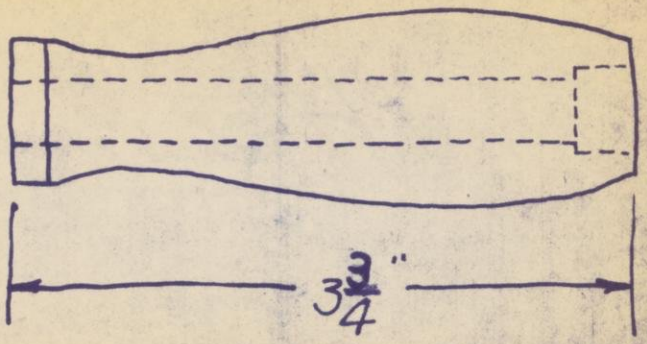

Handle for Hand Wheel on Mashek Truck

DEC 2 1959

PATTERN NO. 779

SEE B. P. NO. 405-C

THE HAMILTON MFG. CO.

DONT REMOVE THIS LEAF FROM BOOK

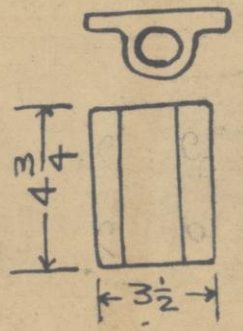

Socket for 1" Pipe - 1/4" projection.

PATTERN NO. 406

SEE B. P. NO. - 93-C.

THE HAMILTON MFG. CO.

DONT REMOVE THIS LEAF FROM BOOK

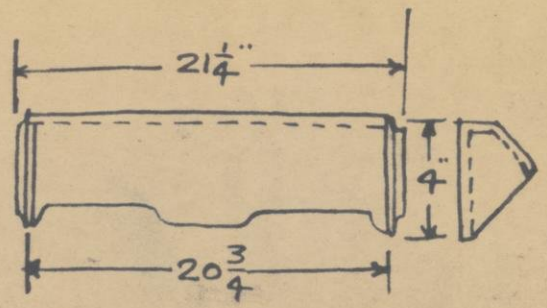

Rail for Dumping Truck-No. 850-A

PATTERN NO. 411-S

SEE B. P. NO.
No Drawing made from B.P. 80C.

THE HAMILTON MFG. CO.

DONT REMOVE THIS LEAF FROM BOOK



American Cut Cost Bracket for 3/4" Pipe.

PATTERN NO.-412

SEE B. P. NO.-98-C

THE HAMILTON MFG. CO.

DONT REMOVE THIS LEAF FROM BOOK

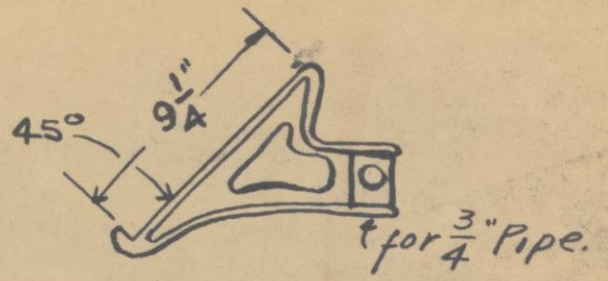

Bracket for Cut Cost Work Bench

PATTERN NO. 418

SEE B. P. NO. 104-C.

THE HAMILTON MFG. CO.

DONT REMOVE THIS LEAF FROM BOOK

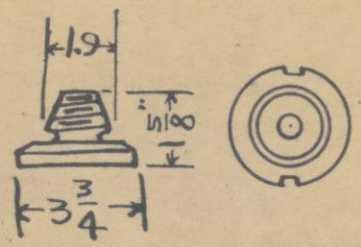

Caster Flange for 1½ Fitting.

PATTERN NO. 422

SEE B. P. NO. 108-C.

THE HAMILTON MFG. CO.

DONT REMOVE THIS LEAF FROM BOOK

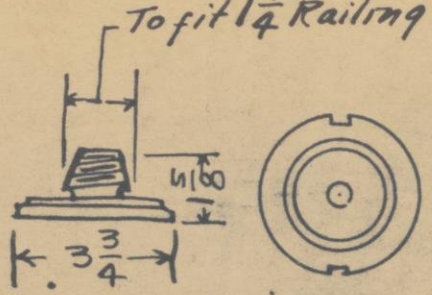

Caster Flange for 1¼ Fitting.

PATTERN NO. 423

SEE B. P. NO. 109-C.

THE HAMILTON MFG. CO.

DONT REMOVE THIS LEAF FROM BOOK

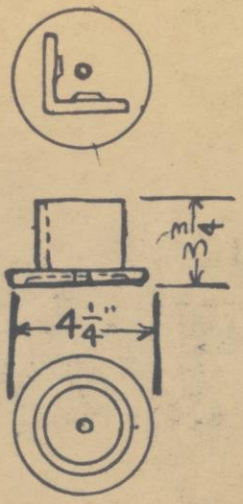

Caster Flange for 3x3x3/16 Angle or 2 1/2 x 2 1/2 Wood Post

PATTERN NO. - 424

SEE B. P. NO. - 110-C.

THE HAMILTON MFG. CO.

DONT REMOVE THIS LEAF FROM BOOK

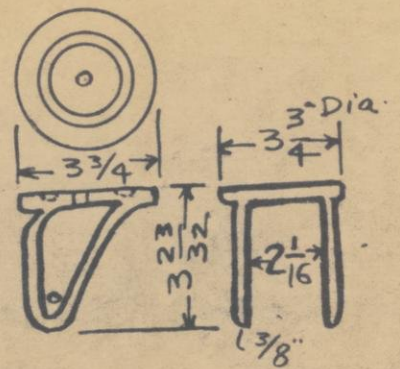

Fork for Swivel Caster

PATTERN NO. 425

SEE B. P. NO. 111-C.

THE HAMILTON MFG. CO.

DONT REMOVE THIS LEAF FROM BOOK

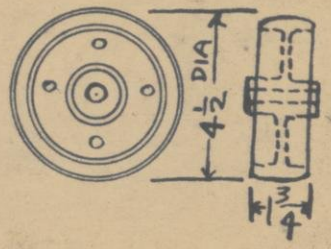

4½" Caster Wheel.

PATTERN NO. 426

SEE B. P. NO. 112-C.

No Drawing

THE HAMILTON MFG. CO.

DONT REMOVE THIS LEAF FROM BOOK

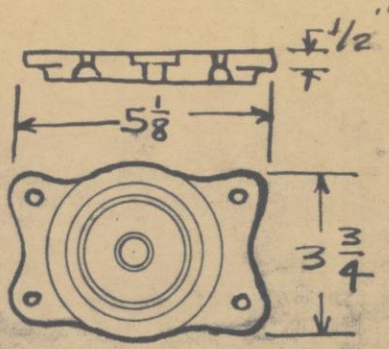

Caster Flange.

PATTERN NO. 427

SEE B. P. NO. 113-C.

THE HAMILTON MFG. CO.

DONT REMOVE THIS LEAF FROM BOOK

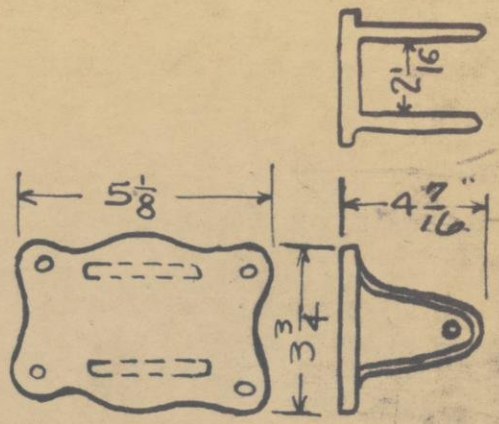

Fork for Stationary Caster

PATTERN NO. 428

SEE B. P. NO. 114-C.

THE HAMILTON MFG. CO.

DONT REMOVE THIS LEAF FROM BOOK

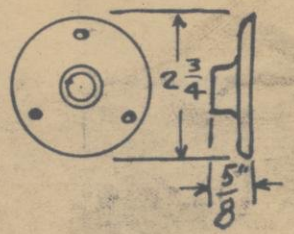

Socket for 5/8" Shaft for Roll Curtain.
AND 9543 B-ARM REST

PATTERN NO. 430

SEE B. P. NO. 116-C

THE HAMILTON MFG. CO.

DONT REMOVE THIS LEAF FROM BOOK

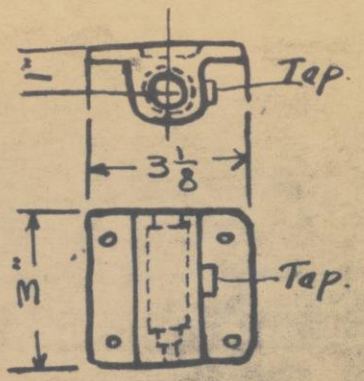

Socket for ½" Pipe or Conduit

PATTERN NO. 431

SEE B. P. NO. 117-C.

THE HAMILTON MFG. CO.

DONT REMOVE THIS LEAF FROM BOOK

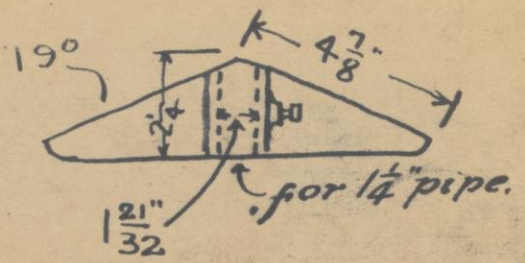

Bracket for Auxiliary Banks - for 1¼" pipe.

PATTERN NO. 434

SEE B. P. NO.
No Drawing Made from Pat 354 - P.P. 49 C.

THE HAMILTON MFG. CO.

DONT REMOVE THIS LEAF FROM BOOK



Special Bracket same as #412 but for 1" pipe

PATTERN NO. 435

SEE B. P. NO.
No Drawing made

THE HAMILTON MFG. CO.

DONT REMOVE THIS LEAF FROM BOOK

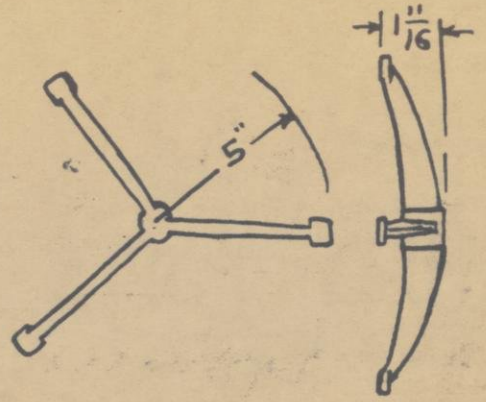

Spider for Bracket Table.

PATTERN NO. 442.

SEE B. P. NO.-122-C.

THE HAMILTON MFG. CO.

DONT REMOVE THIS LEAF FROM BOOK

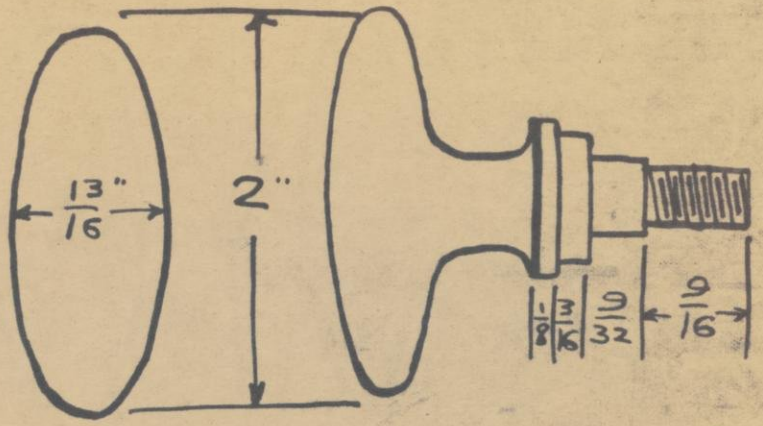

Knob No. 1 for Up and Down Bolts.

SEE B.P. 207 C

PATTERN NO. 445

SEE B. P. NO. ~~125 C~~ 1.

THE HAMILTON MFG. CO.

DONT REMOVE THIS LEAF FROM BOOK

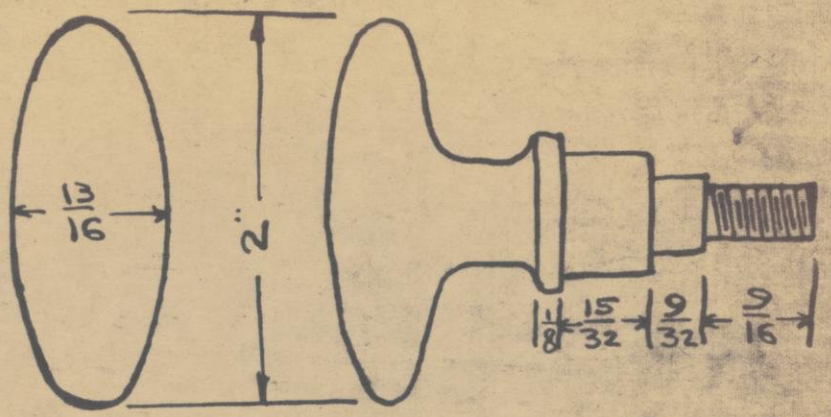

Knob No. 2 for Up and Down Bolts.

PATTERN NO. 446.

SEE B. P. NO. 125-C.

THE HAMILTON MFG. CO.

DONT REMOVE THIS LEAF FROM BOOK

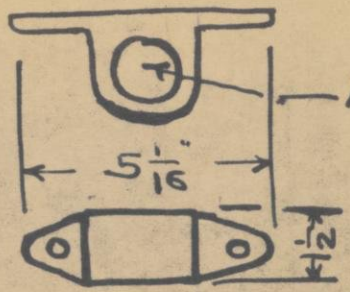

Socket for 1¼ Pipe - ¼" Overhang.

PATTERN NO. 452

SEE B. P. NO. 130-C.

THE HAMILTON MFG. CO.

DONT REMOVE THIS LEAF FROM BOOK

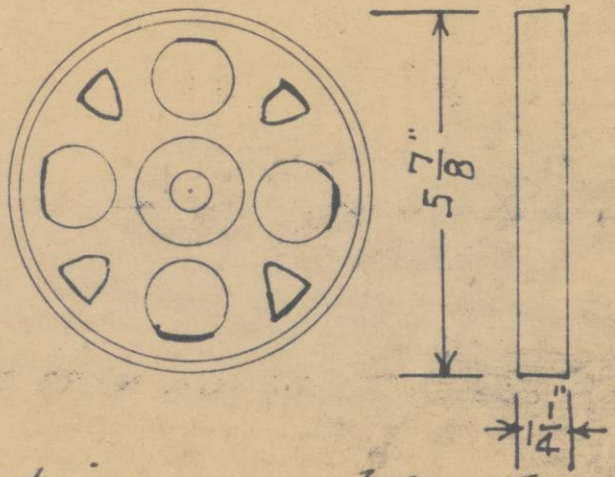

Cast iron wheel for trucks

PATTERN NO. 488

SEE B. P. NO. 169-C

THE HAMILTON MFG. CO.

DONT REMOVE THIS LEAF FROM BOOK

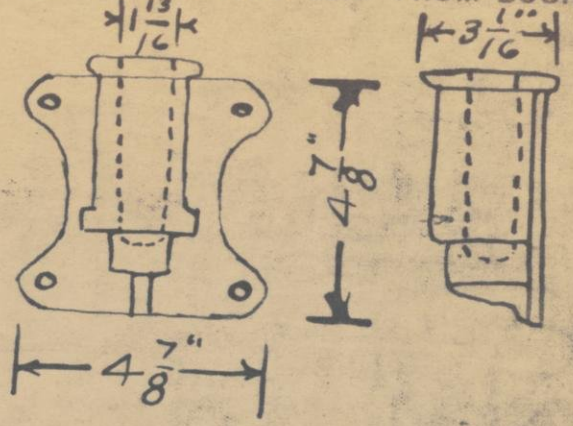

Cast iron socket for truck casters

SEE B. P. NO. 170-C.

PATTERN NO. 489

THE HAMILTON MFG. CO.

DONT REMOVE THIS LEAF FROM BOOK

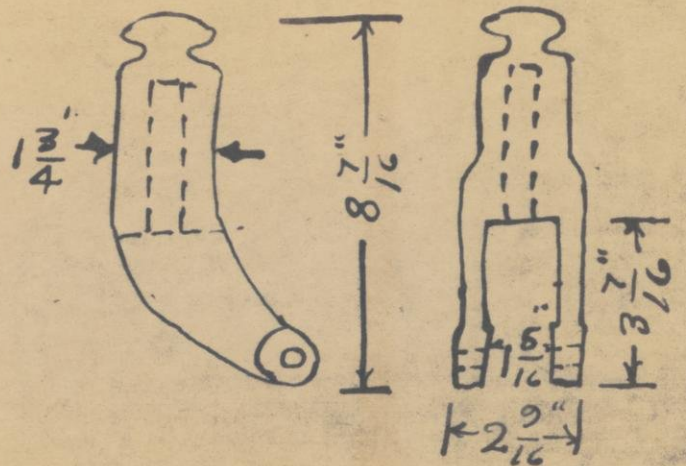

Cast iron fork for truck casters

PATTERN NO. 490

SEE B. P. NO. 171-C

THE HAMILTON MFG. CO.

DONT REMOVE THIS LEAF FROM BOOK

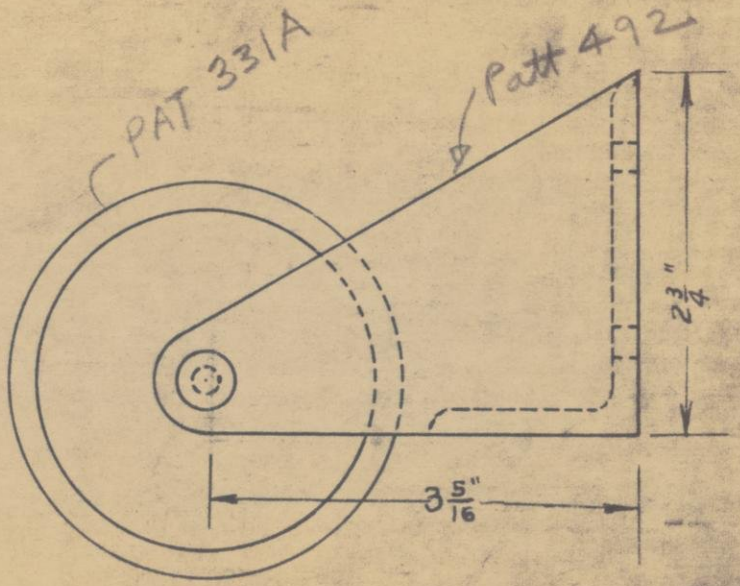

CASTING FOR REAR OF ROLLER DRAWER FOR WOOD PLATEN PRESSROOM CABINET.

PATTERN NO. 492

SEE B. P. NO. 174-C.

THE HAMILTON MFG. CO.

DONT REMOVE THIS LEAF FROM BOOK

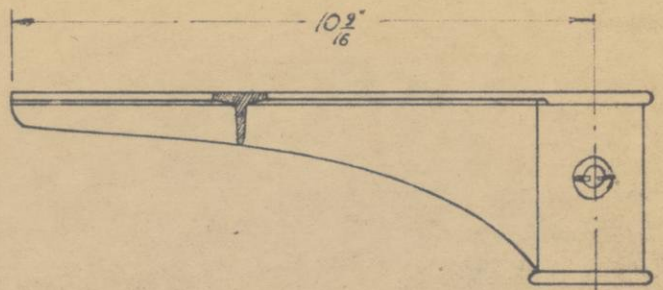

1" PIPE BRACKET FOR MACHINISTS CABINET AND WORK BENCH

PATTERN NO. 493

SEE B. P. NO. 175-C.

THE HAMILTON MFG. CO.

DONT REMOVE THIS LEAF FROM BOOK

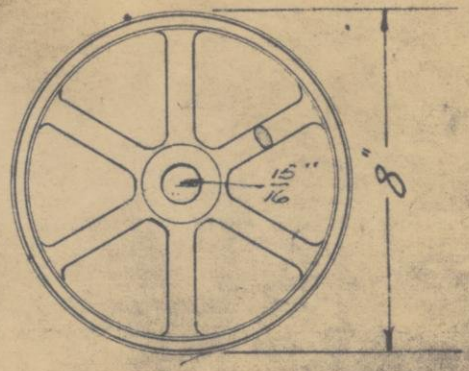

8" CAST IRON TRUCK WHEEL
1½" FACE

PATTERN NO. 496

SEE B. P. NO. 177-C.

THE HAMILTON MFG. CO.

DONT REMOVE THIS LEAF FROM BOOK

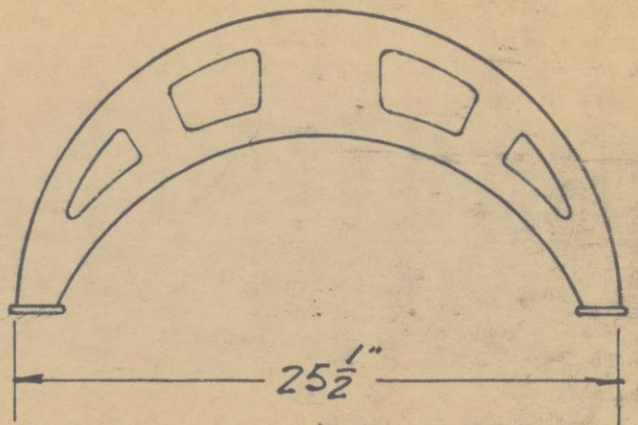

Bracket for No. 31-D. Adj Drawing Table

PATTERN NO. 497

SEE B. P. NO. 1629-W.

THE HAMILTON MFG. CO.

DONT REMOVE THIS LEAF FROM BOOK

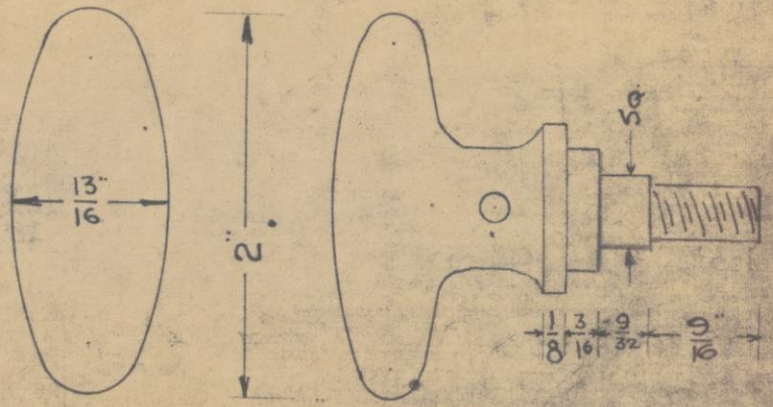

No 1 MALLEABLE IRON KNOB FOR UP & DOWN BOLT

PATTERN NO. 530 "S"

SEE B. P. NO. 207 "C"

4/18/27 REV. FROM CAST IRON TO MALLEABLE IRON

THE HAMILTON MFG. CO.

DONT REMOVE THIS LEAF FROM BOOK

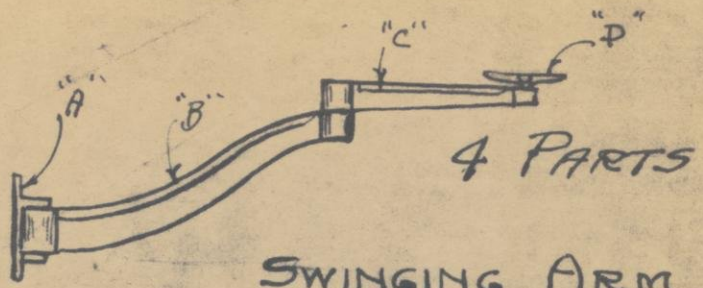

4 PARTS

SWINGING ARM FOR
DRAWING STAND TRAY

NO WORKING DRAWING

SEE B. P. NO. 225

PATTERN NO. 548

No Drawing

THE HAMILTON MFG. CO.

DONT REMOVE THIS LEAF FROM BOOK

STAR WHEEL

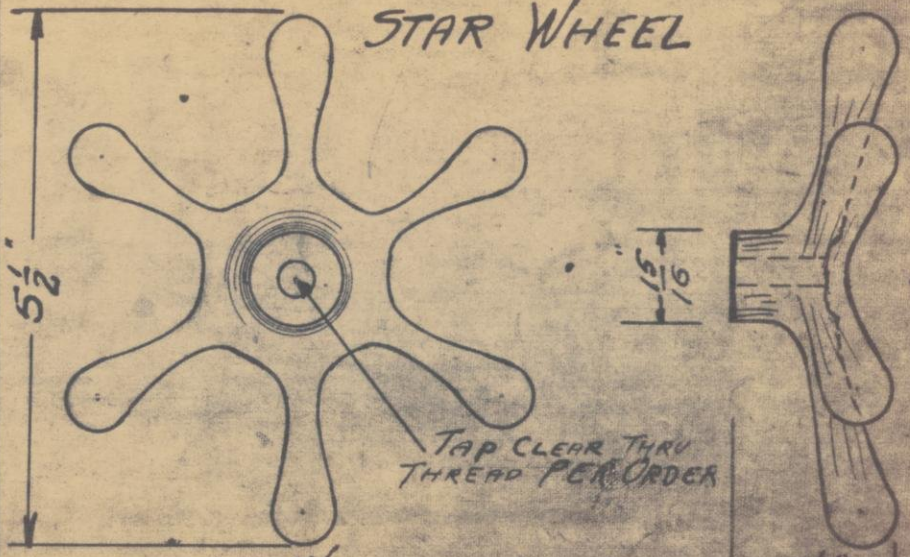

SCALE ½ SIZE

WEIGHT 1 LB. 7 OUNCES

PATTERN NO. 570

SEE B. P. NO. 242

No Drawing B.P. NO. HO-156 B.W.

THE HAMILTON MFG. CO.

DONT REMOVE THIS LEAF FROM BOOK

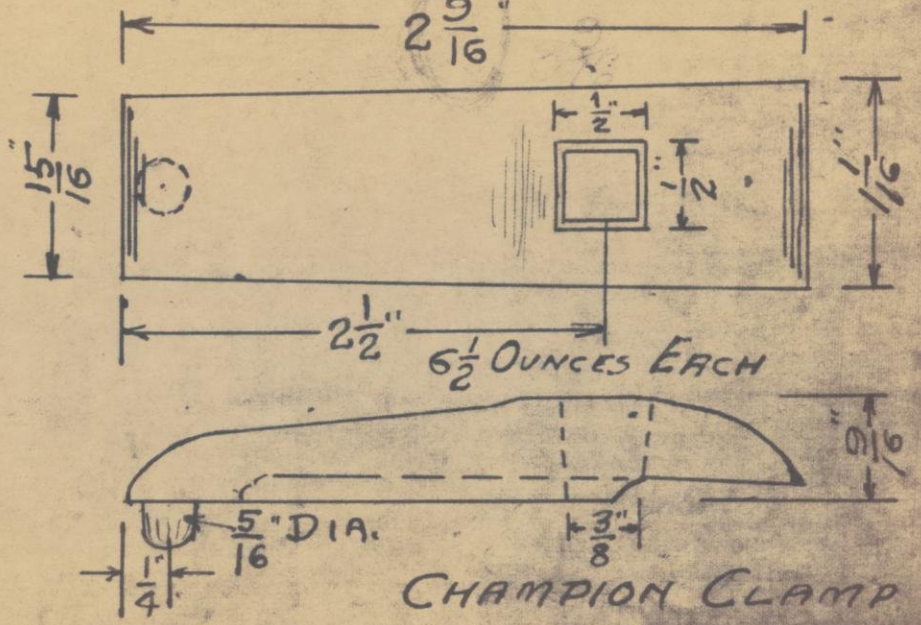

CHAMPION CLAMP

SCALE FULL SIZE

PATTERN NO. 572

SEE B. P. NO. 244 SEE PATTERN NO. 1616

NO DRAWING

THE HAMILTON MFG. CO.

DON'T REMOVE THIS LEAF FROM BOOK

No. B/P

WEIGHT 1/4 LB. EACH

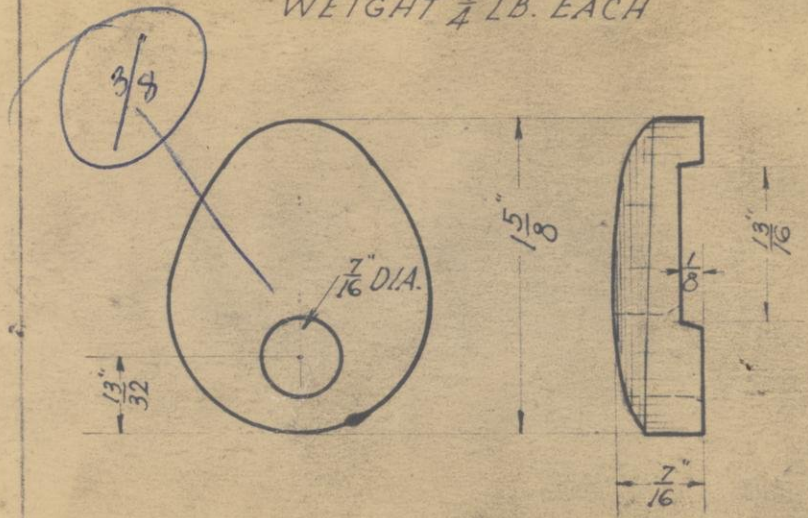

OVAL CLAMP WASHER

PATTERN NO. 575

SEE B. P. NO. 247

NO DRAWING REVISED 8-1-28

THE HAMILTON MFG. CO.

DONT REMOVE THIS LEAF FROM BOOK

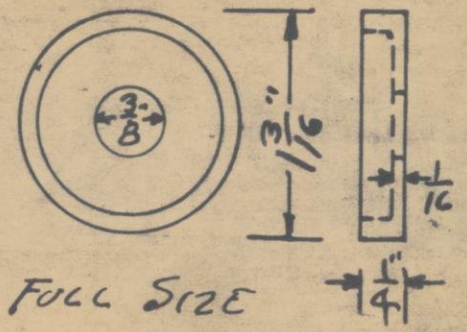

50 WEIGH 2 1/2 LBS.

FULL SIZE

ROUND WASHER

PATTERN NO. 576

SEE B. P. NO. 248

No Drawing

THE HAMILTON MFG. CO.

DONT REMOVE THIS LEAF FROM BOOK

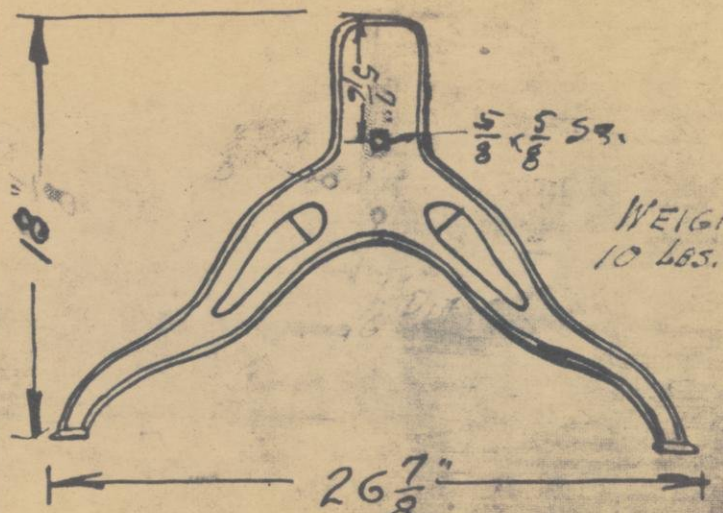

WEIGHT-
10 LBS. EACH.

LEGS FOR CHAMPION TABLES

PATTERN NO. 578

SEE B. P. NO. 251

No Drawing

THE HAMILTON MFG. CO.

DONT REMOVE THIS LEAF FROM BOOK

15 3/4

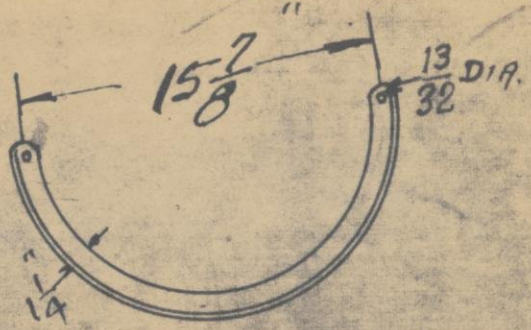

CIRCLE IRON FOR CHAMPION TABLES

PATTERN NO. 579

SEE B. P. NO. 252

THE HAMILTON MFG. CO.

DONT REMOVE THIS LEAF FROM BOOK

See B.P. No. 38873 for Plate

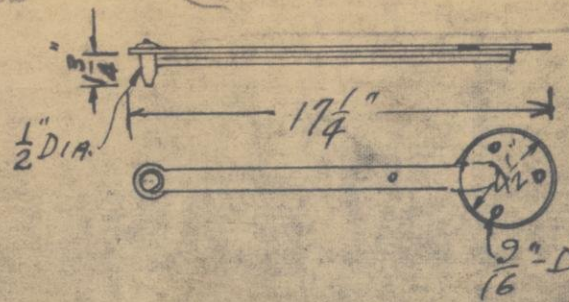

SWING ARMS FOR CHAMPION & FRY TABLES

38873-P

PATTERN NO. 580

SEE B. P. NO. 253

No Drawing

THE HAMILTON MFG. CO.

DONT REMOVE THIS LEAF FROM BOOK

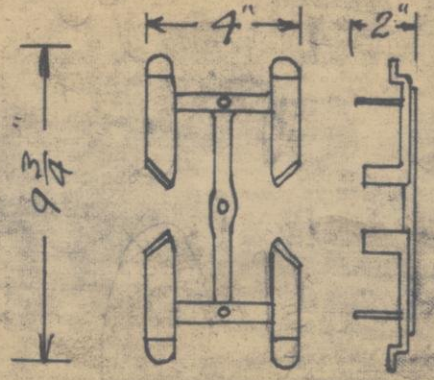

STOP FOR LIFTING IRON FOR FRY TABLES & #25 COMBINATION

PATTERN NO. 581

SEE B. P. NO. 254

No Drawing

THIS PRINT ISSUED TO FACTORY
DATE SEP 9 1969
ANY COPY, PREVIOUSLY ISSUED & WITHOUT THIS STAMP, IS OBSOLETE.
HAMILTON MFG. CO.
ENGINEERING DEPT.

THE HAMILTON MFG. CO.

DONT REMOVE THIS LEAF FROM BOOK

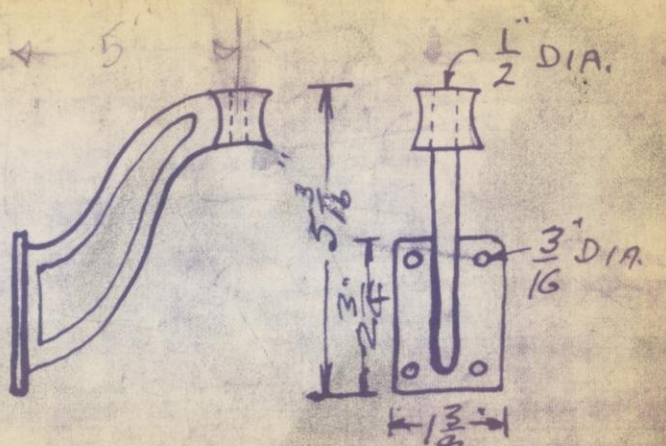

BRACKET FOR SWING ARM FOR CHAMPION & 25 "C" COMBINATION

38813-A PATTERN NO. 582

SEE B. P. NO. ~~255~~

No Drawing

THE HAMILTON MFG. CO.

DONT REMOVE THIS LEAF FROM BOOK

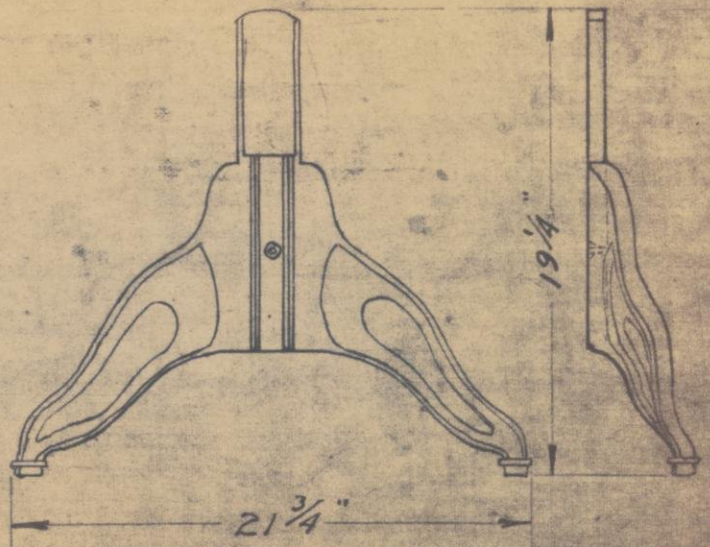

FOOT FOR TABLE - OLD STYLE

For No. 10 Table PATTERN NO. 583

SEE B. P. NO 256

No Drawing

THE HAMILTON MFG. CO.

DONT REMOVE THIS LEAF FROM BOOK

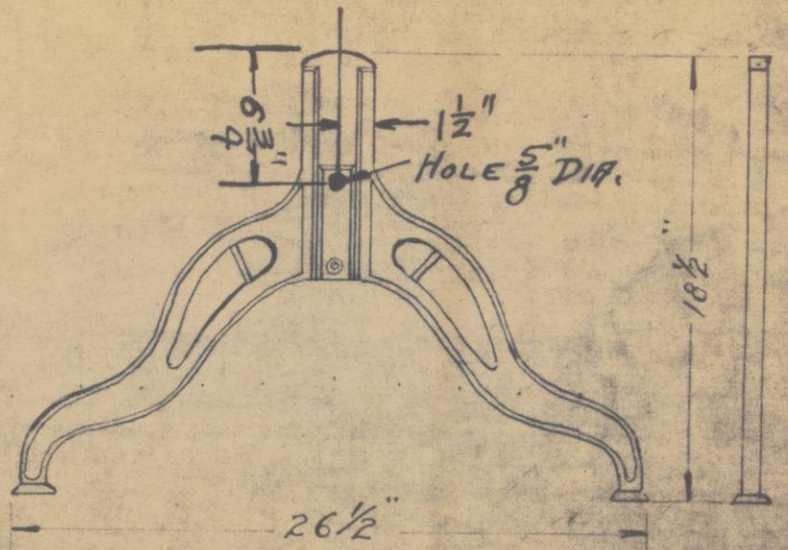

FOOT FOR FRY TABLE

PATTERN NO. 584

SEE B. P. NO. 257

No Drawing

THE HAMILTON MFG. CO.

DONT REMOVE THIS LEAF FROM BOOK

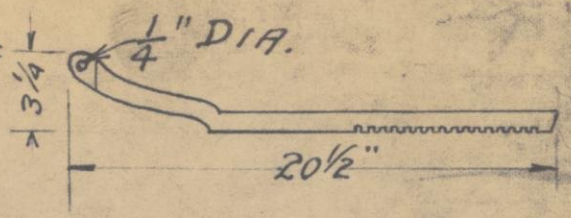

- #6 RATCHET IRON FOR FRY TABLE -

SEE B. P. NO. 258

PATTERN NO. 585

No Drawing

THE HAMILTON MFG. CO.

DONT REMOVE THIS LEAF FROM BOOK

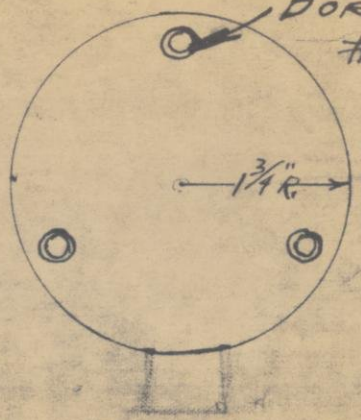

SMALL SWING ARM PLATE #23
FOR ARM #22 USED ON COMBINATION TABLES

PATTERN NO. 586

SEE B. P. NO. 259

No Drawing

THE HAMILTON MFG. CO.

DONT REMOVE THIS LEAF FROM BOOK

When ordering #587 Casting
Order #586 Plates.

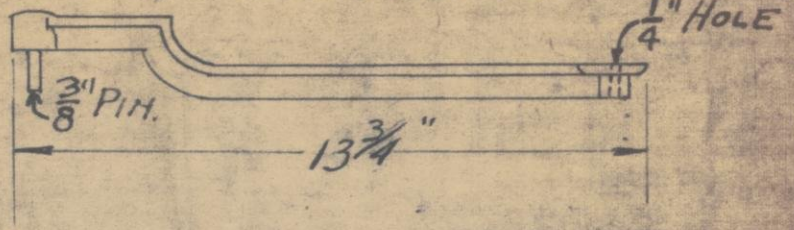

#22 SWING ARM FOR #25 & 26 COMBINATION TABLE

PATTERN NO. 587

SEE B. P. NO 260

No Drawing

THE HAMILTON MFG. CO.

DONT REMOVE THIS LEAF FROM BOOK

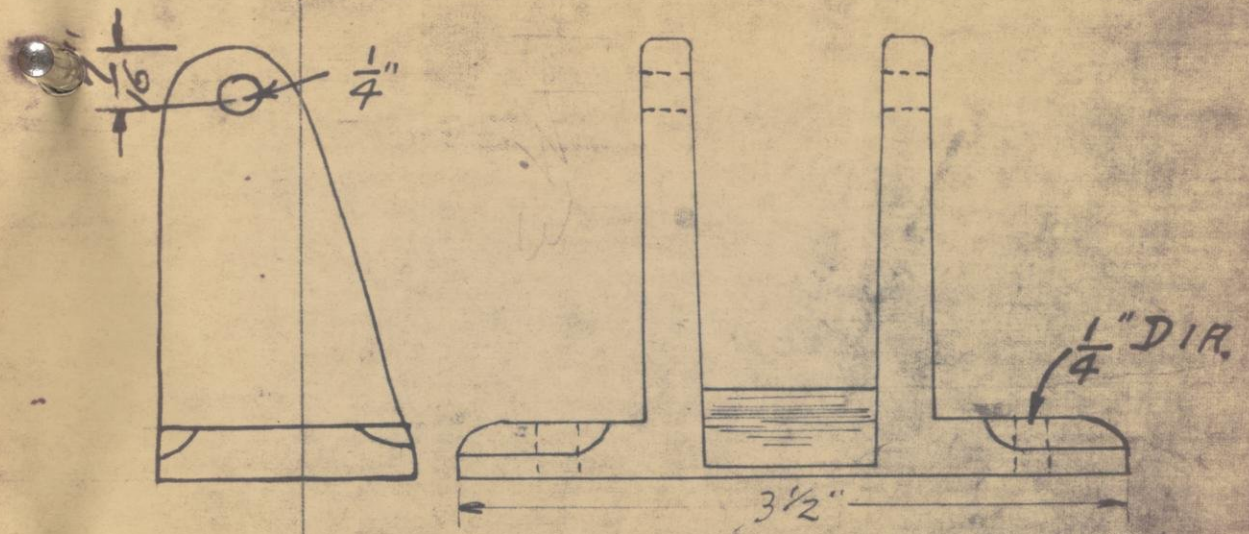

#21 CATCH FOR RATCHET IRON ON FRY TABLES

PATTERN NO. 588

SEE B. P. NO. 261

No Drawing

THE HAMILTON MFG. CO.

DONT REMOVE THIS LEAF FROM BOOK

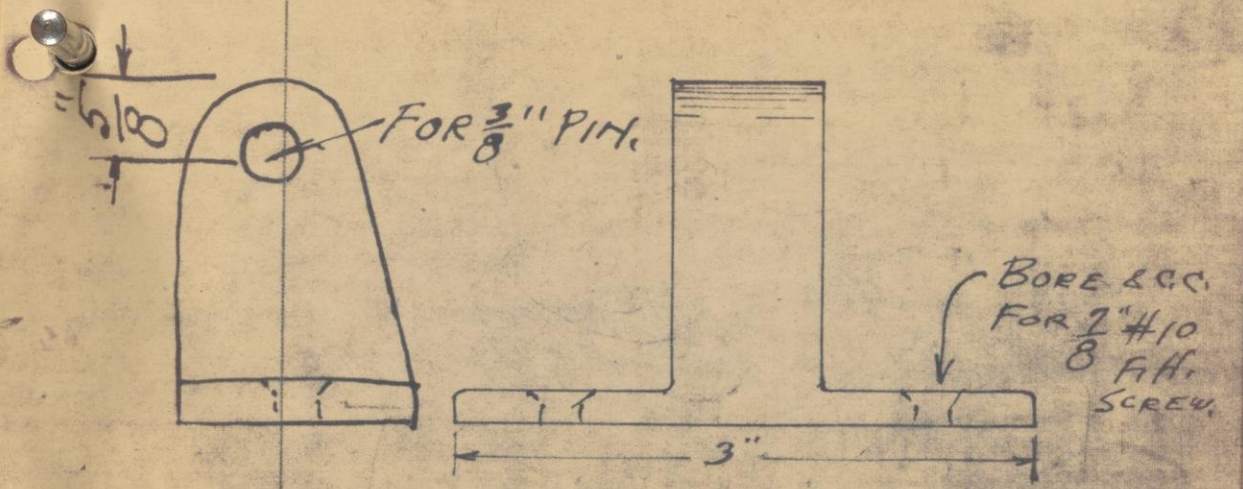

#28 BRACKET FOR SWING ARM ON #25 & 26 COMBINATION TABLE

PATTERN NO. 589

SEE B. P. NO. 262

No Drawing

THE HAMILTON MFG. CO.

DONT REMOVE THIS LEAF FROM BOOK

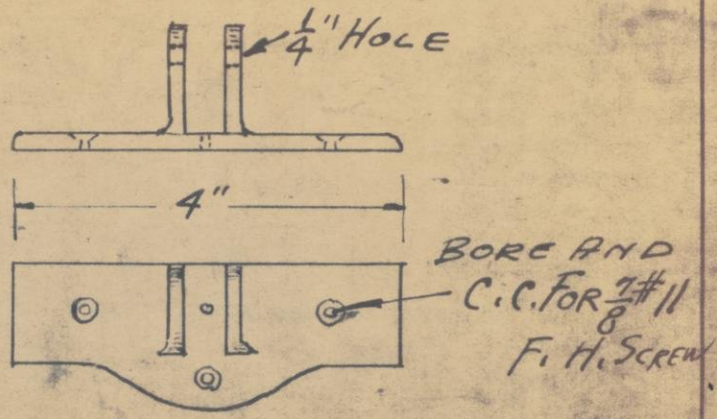

#9 SWING ON RATCHET IRON FOR FRY TABLE

PATTERN NO. 590

SEE B. P. NO. 263

No Drawing

THE HAMILTON MFG. CO.

DONT REMOVE THIS LEAF FROM BOOK

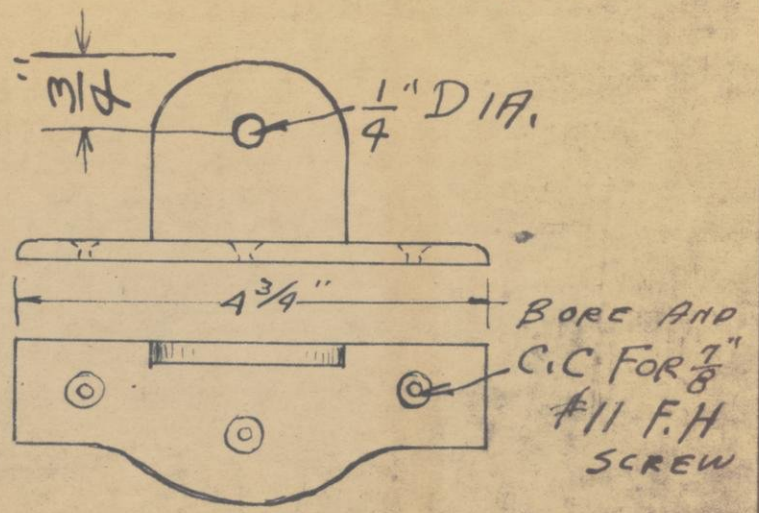

✓ #8 SWING ON STANDARD FOR FRY TABLES

PATTERN NO. 591

SEE B. P. NO. 264

No Drawing

THE HAMILTON MFG. CO.

DONT REMOVE THIS LEAF FROM BOOK

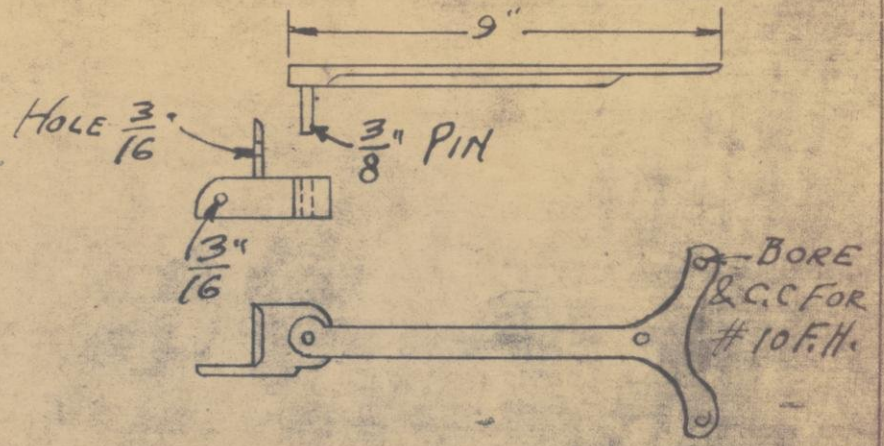

Sewing Arm for #243 Treading Tables

PATTERN NO. 592

SEE B. P. NO. 265

No Drawing

THE HAMILTON MFG. CO.

DONT REMOVE THIS LEAF FROM BOOK

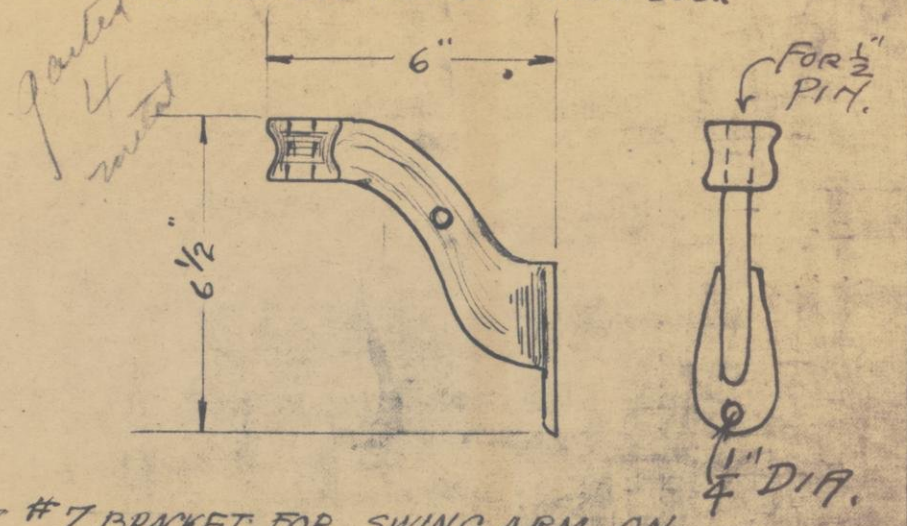

- #7 BRACKET FOR SWING ARM ON FRY TABLE -

SEE B. P. NO. 266

PATTERN NO. 593

No Drawing

THE HAMILTON MFG. CO.

DONT REMOVE THIS LEAF FROM BOOK

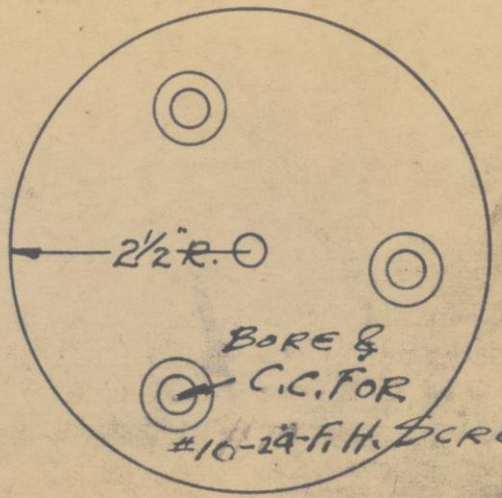

#10 PLATE FOR SWING ARM ON FRY TABLE

PATTERN NO. 594

SEE B. P. NO. 267

No Drawing

THE HAMILTON MFG. CO.

DONT REMOVE THIS LEAF FROM BOOK

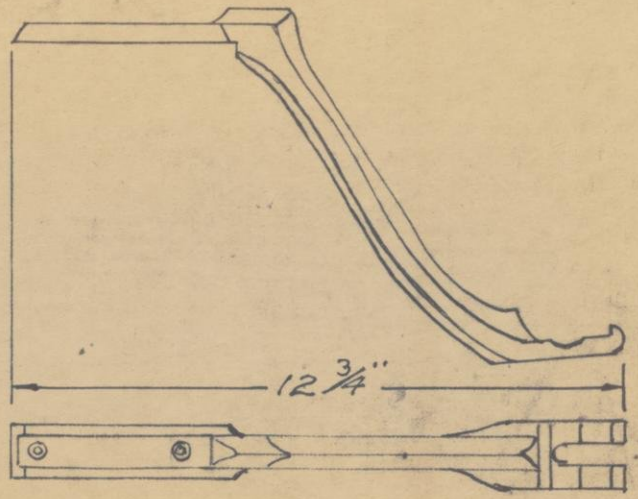

PATTERN NO. 595

SEE B. P. NO. 267

No Drawing

THE HAMILTON MFG. CO.

DONT REMOVE THIS LEAF FROM BOOK

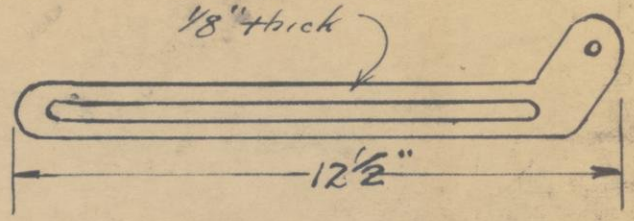

(Fritz)

PATTERN NO. 596

SEE B. P. NO. 268

No Drawing

THE HAMILTON MFG. CO.

DONT REMOVE THIS LEAF FROM BOOK

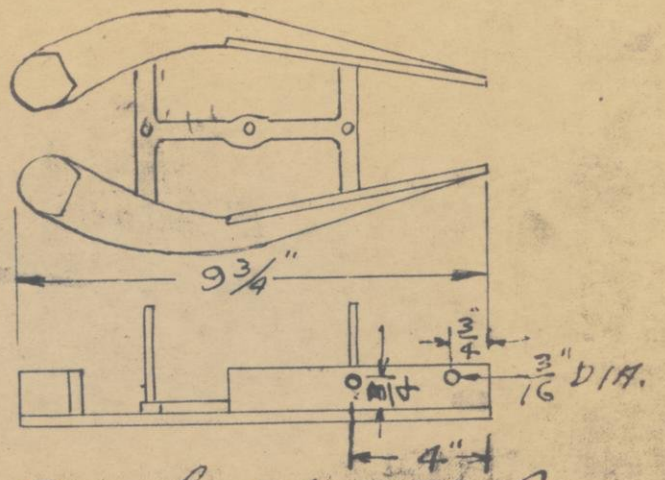

Iron for foot Rest on Fry Tables

PATTERN NO. 597

SEE B. P. NO. 269

No Drawing

THE HAMILTON MFG. CO.

DONT REMOVE THIS LEAF FROM BOOK

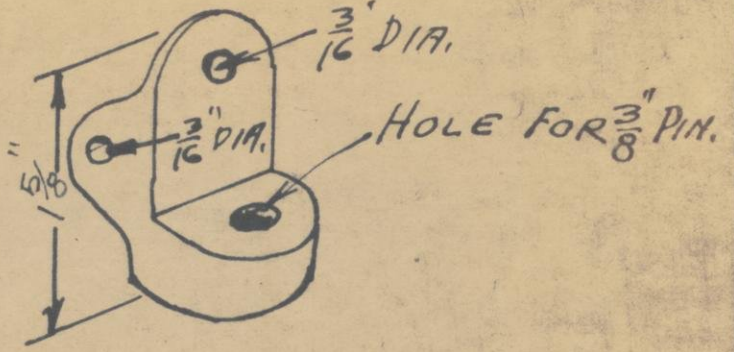

Small Casting for Swing arm for #1 Folding Tables.

PATTERN NO. 598

SEE B. P. NO. 270

No Drawing

THE HAMILTON MFG. CO.

DONT REMOVE THIS LEAF FROM BOOK

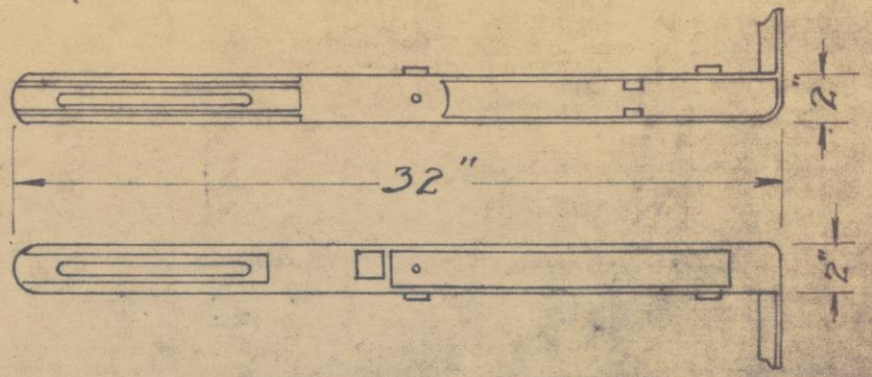

#25 STANDARD FOR #10 TABLE

Old Style.

PATTERN NO. 591

SEE B. P. NO. 271

No Drawing

THE HAMILTON MFG. CO.

DONT REMOVE THIS LEAF FROM BOOK

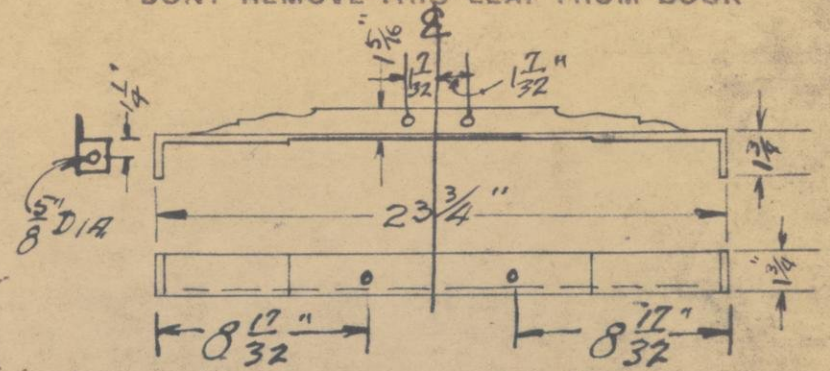

#1 CROSS BAR FOR #1 & #2 FRY TABLES

WORK TOGETHER WITH PAT. # 604

PATTERN NO. 600

SEE B. P. NO 172

No Drawing

THE HAMILTON MFG. CO.

DONT REMOVE THIS LEAF FROM BOOK

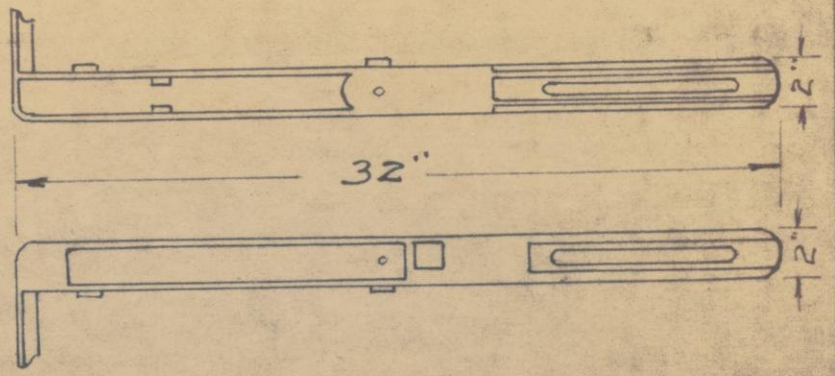

#24 STANDARD FOR #10 TABLE

Old Style

PATTERN NO. 601

SEE B. P. NO. 273

No Drawing

THE HAMILTON MFG. CO.

DONT REMOVE THIS LEAF FROM BOOK

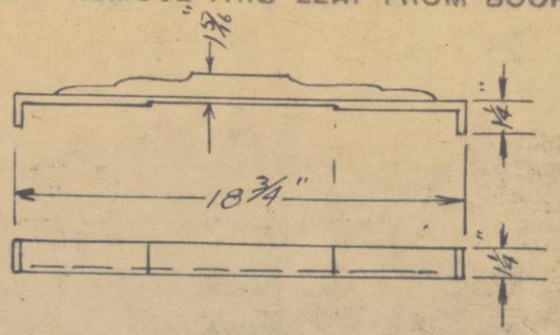

#26 CROSS BAR FOR #10 TABLE

Old Style

SEE B. P. NO. 274 PATTERN NO. 602

No Drawing

THE HAMILTON MFG. CO.

DONT REMOVE THIS LEAF FROM BOOK

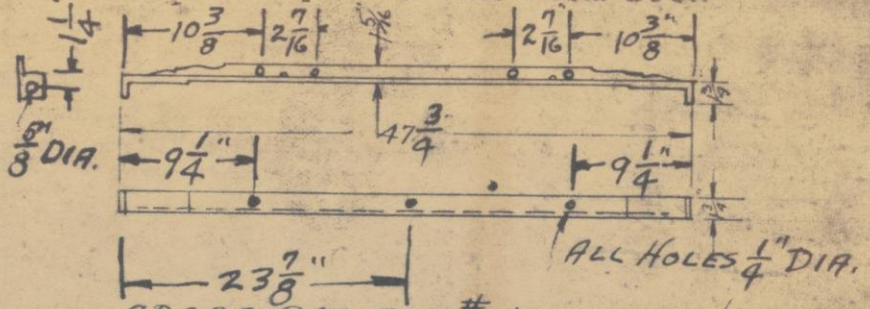

CROSS BAR FOR #4 FRY TABLE

FIT TOGETHER WITH PAT # 606
BEFORE BORING

PATTERN NO. 603

SEE B. P. NO. 275

No Drawing

THE HAMILTON MFG. CO.

DONT REMOVE THIS LEAF FROM BOOK



▽ #6 BRACE FOR #1 & #2 FRY TABLES ▽

FIT TOGETHER WITH PAT. #600

BEFORE BORING HOLES

PATTERN NO. 604

SEE B. P. NO. 276

No Drawing

THE HAMILTON MFG. CO.

DONT REMOVE THIS LEAF FROM BOOK

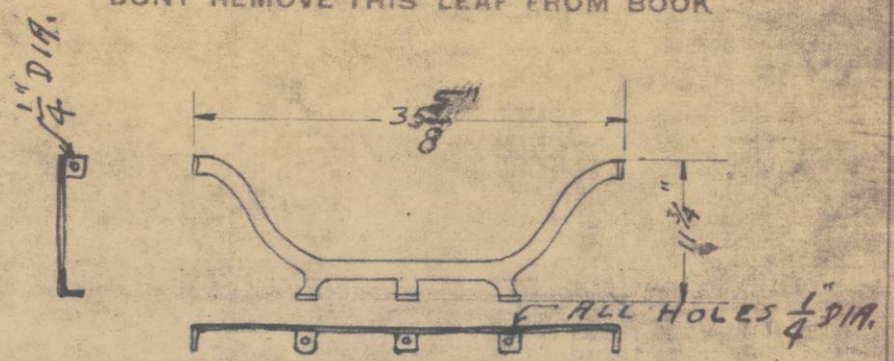

#5 BRACE FOR #3 FRY TABLE —

FIT TOGETHER WITH PAT.# 608
BEFORE BORING HOLES

PATTERN NO. 605

SEE B. P. NO. 277

No Drawing

THE HAMILTON MFG. CO.

DONT REMOVE THIS LEAF FROM BOOK

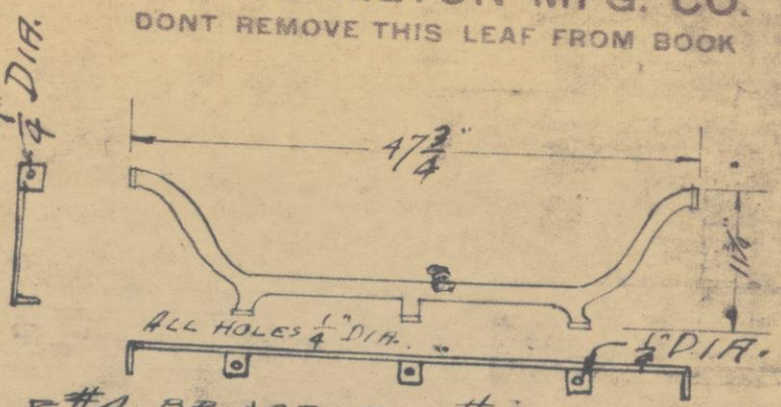

#4 BRACE FOR #4 FRY TABLE

FIT TOGETHER WITH PAT. #603 BEFORE BORING HOLES

PATTERN NO. 606

SEE B. P. NO. 278

No Drawing

THE HAMILTON MFG. CO.

DONT REMOVE THIS LEAF FROM BOOK

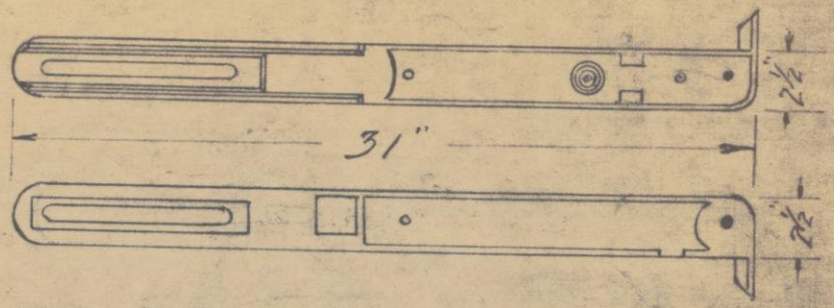

#14 STANDARD FOR FRY TABLE

LEFT - BORED & TAPPED SAME AS PAT. #609

Pulley Pattern G

SEE B. P. NO. 279

PATTERN NO. 609

No Drawing

THE HAMILTON MFG. CO.

DONT REMOVE THIS LEAF FROM BOOK

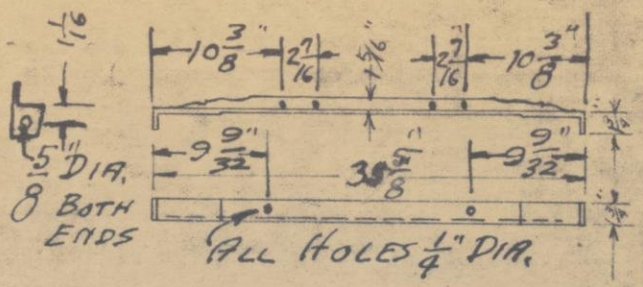

#2 CROSS BAR FOR #3 FRY TABLE

WORK TOGETHER WITH PAT. #605

PATTERN NO. 608

SEE B. P. NO. 280

No Drawing

THE HAMILTON MFG. CO.

DONT REMOVE THIS LEAF FROM BOOK

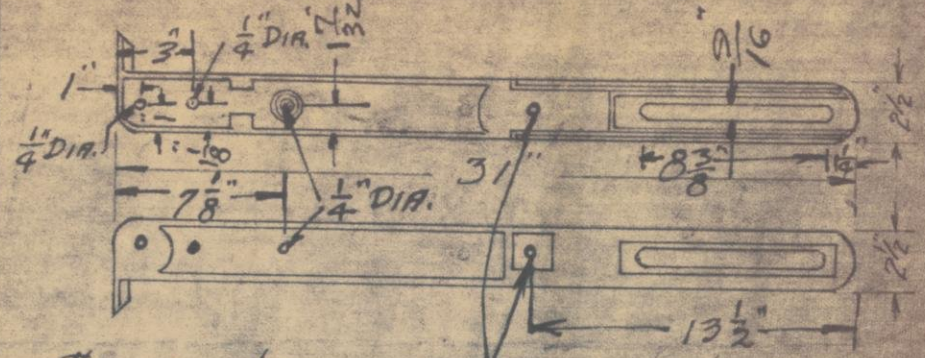

#15 STANDARD FOR FRY TABLE

TAP FOR 1/2" BOLT.

RIGHT

FIT BRACE PAT. #605

600 & 603 & 608 BEFORE BORING

Metal Pattern

PATTERN NO. 609

SEE B. P. NO. 281

No Drawing

THE HAMILTON MFG. CO.

DON'T REMOVE THIS LEAF FROM BOOK

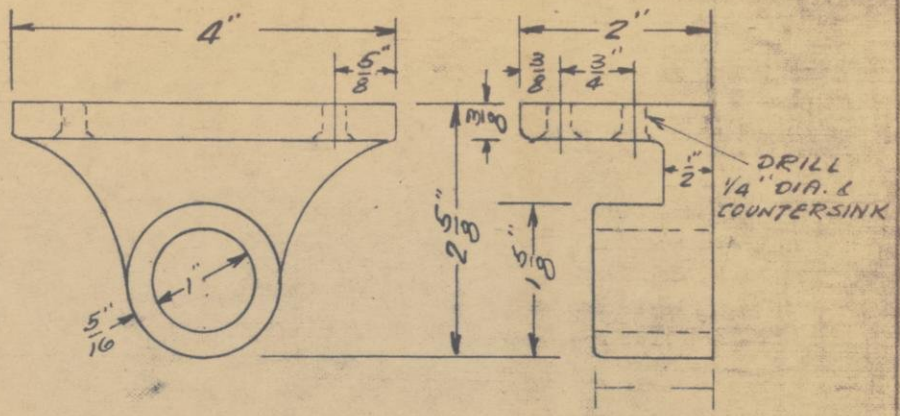

BEARING FOR CALLEY TRUCKS
Nos 3500 & 3505

PATTERN NO. 612

SEE B. P. NO. 284-C

HAMILTON MFG. CO.

DO NOT REMOVE THIS LEAF FROM BOOK

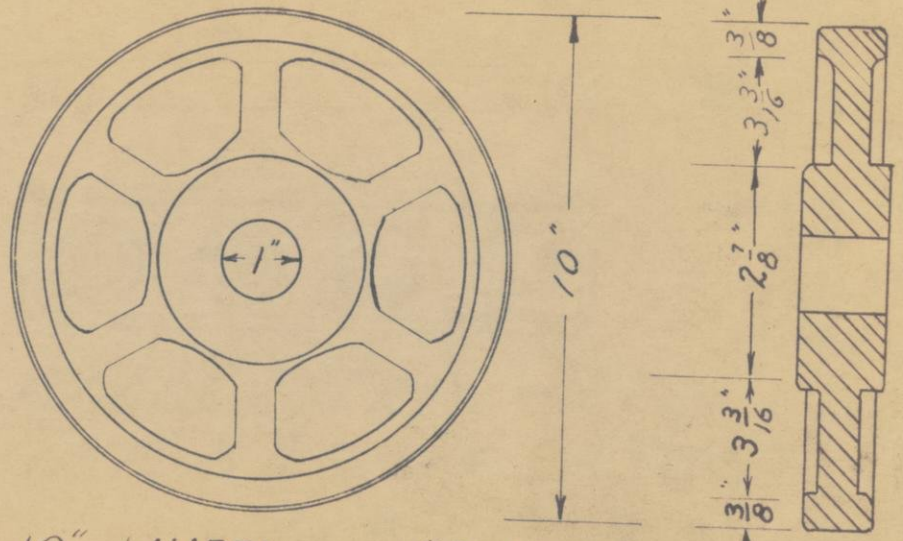

DATE- 4-8-30

10" WHEEL FOR 1" PLAIN BEARING

SEE B. P. NO. 283 C.A.

PATTERN NO. 617A

THE HAMILTON MFG. CO.

DON'T REMOVE THIS LEAF FROM BOOK

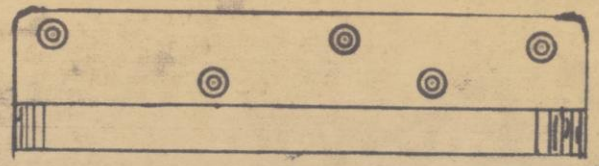







ROLLER TRAY - FOR
INK & ROLLER CABINET
No 5105

PATTERN NO. 629

SEE B. P. NO. 303-C

THE HAMILTON MFG. CO.

DON'T REMOVE THIS LEAF FROM BOOK

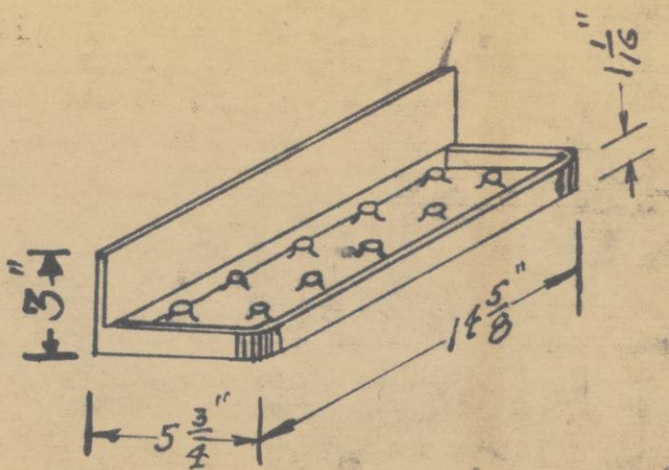

ROLLER TRAY - FOR INK & ROLLER CART
No. 5105 & 5100

PATTERN NO. 630

SEE B. P. NO. 304-C

THE HAMILTON MFG. CO.

DON'T REMOVE THIS LEAF FROM BOOK

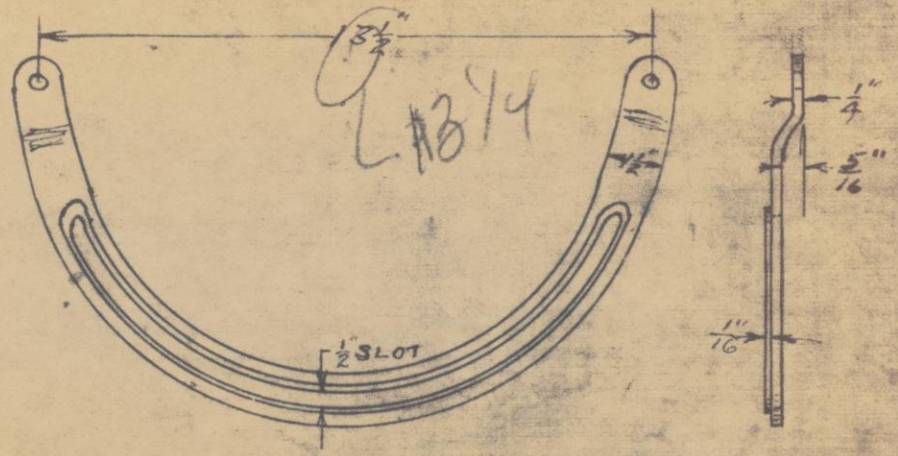

CIRCLE IRON FOR DRAWING TABLE

PATTERN NO. 646

SEE B. P. NO. 320-C

THE HAMILTON MFG. CO.

DON'T REMOVE THIS LEAF FROM BOOK

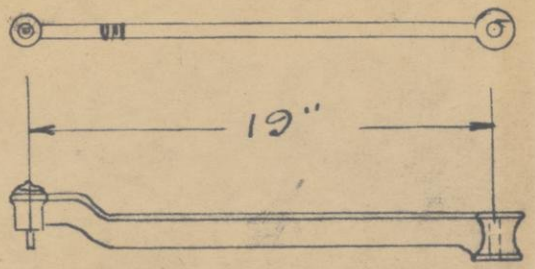

EXTENSION ARM FOR TOOL TRAY
FOR FRY TABLE No. 5-6-8-7

PATTERN NO. 672

SEE B. P. NO. 323

THE HAMILTON MFG. CO.

DON'T REMOVE THIS LEAF FROM BOOK

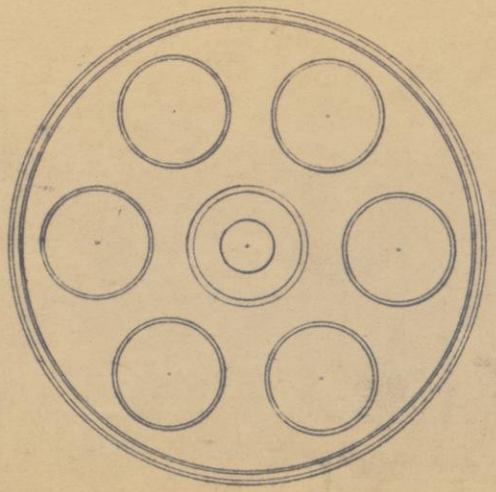

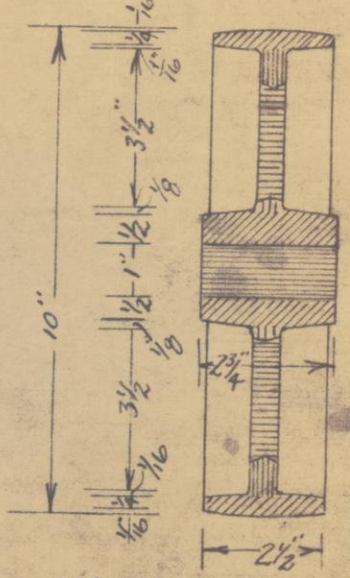

SPECIAL 10" TRUCK WHEEL

PATTERN NO. 673

SEE B. P. NO. 324-C

THE HAMILTON MFG. CO.

DON'T REMOVE THIS LEAF FROM BOOK

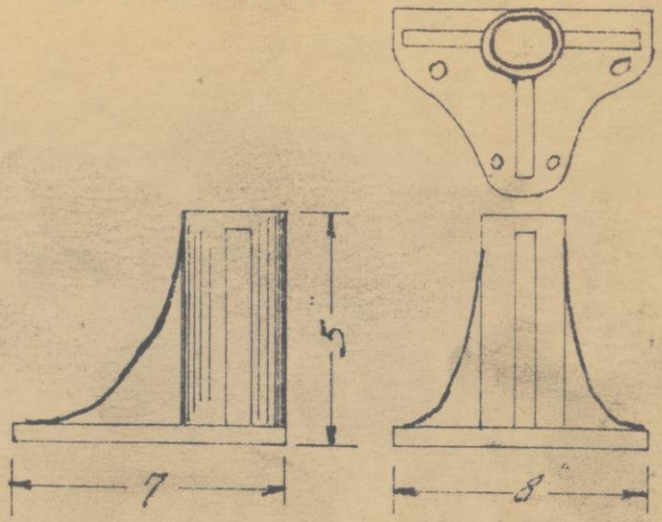

Special Casting.
for 1¼" pipe.

PATTERN NO. 695

SEE B. P. NO. 333-C.

THE HAMILTON MFG. CO.

DON'T REMOVE THIS LEAF FROM BOOK

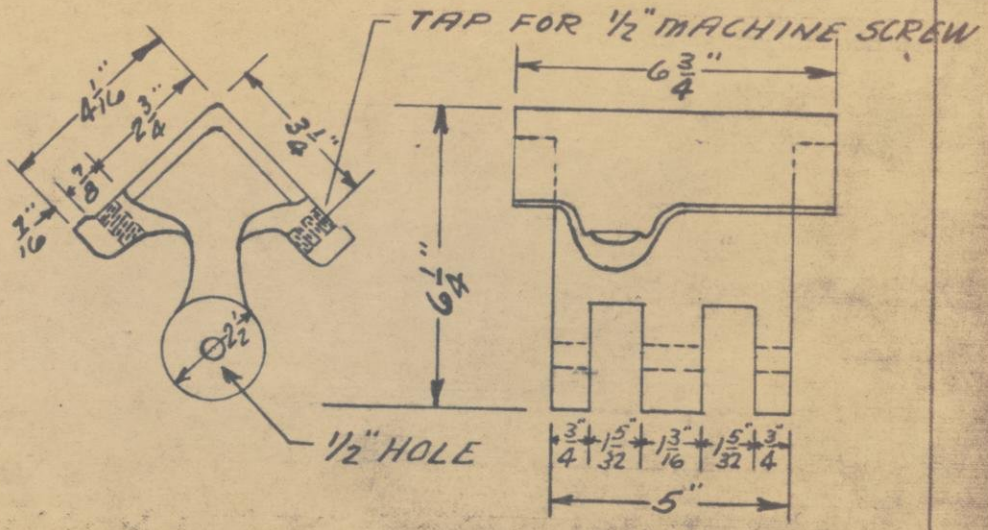

SWINGING BRACKET FOR GLUE POT

PATTERN NO. 704

SEE B. P. NO. 1987-A

THE HAMILTON MFG. CO.

DON'T REMOVE THIS LEAF FROM BOOK

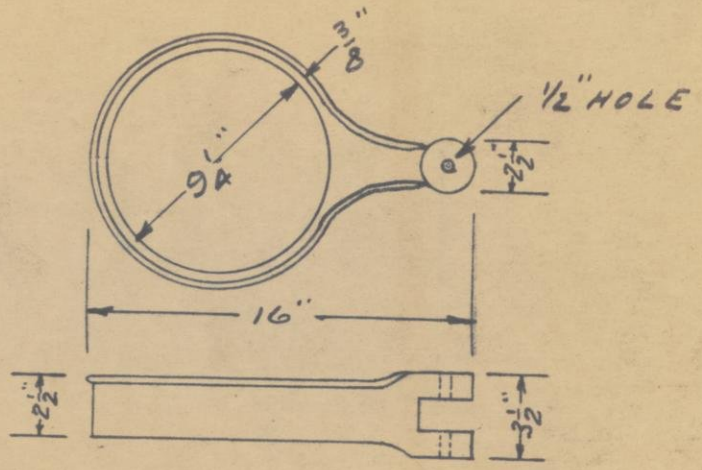

SWINGING BRACKET FOR GLUE POT

PATTERN NO. 704-A

SEE B. P. NO. 1987-A

THE HAMILTON MFG. CO.

DON'T REMOVE THIS LEAF FROM BOOK

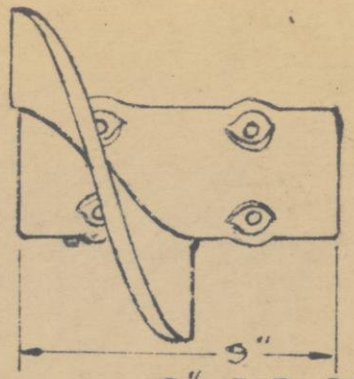

9" FOR PAT. 731
8" FOR PAT. 732
7" FOR PAT. 733

WORM FOR BLOWER

SEE B. P. NO. 366-C 367-C 368-C

PATTERN NO. 731 732 733

THE HAMILTON MFG. CO.

DON'T REMOVE THIS LEAF FROM BOOK

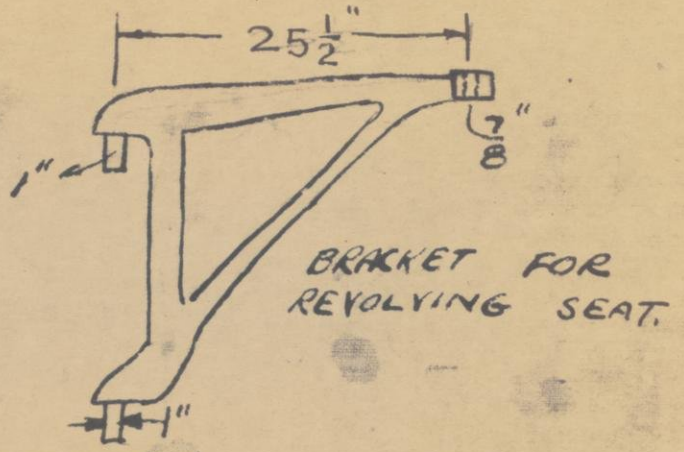

BRACKET FOR REVOLVING SEAT.

PATTERN NO. 739

SEE B. P. NO. 374C

0024995

THE HAMILTON MFG. CO.

DON'T REMOVE THIS LEAF FROM BOOK

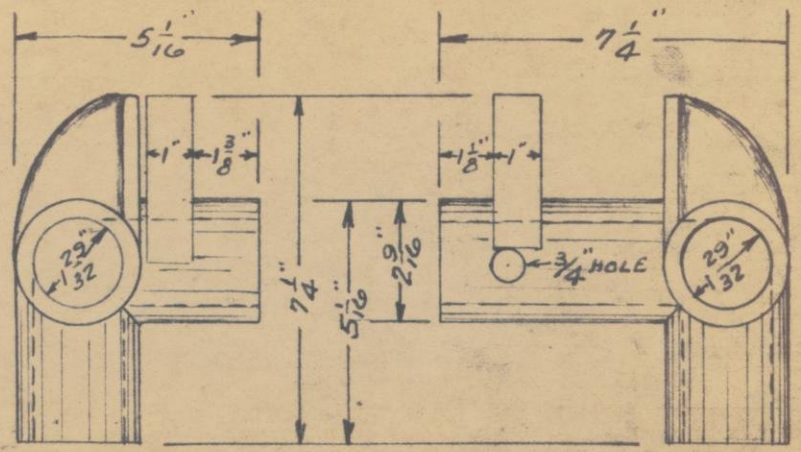

ELBOW FOR SMOUSE TRUCK

PATTERN NO. 747 R&L

SEE B. P. NO. 378-C

THE HAMILTON MFG. CO.

DON'T REMOVE THIS LEAF FROM BOOK

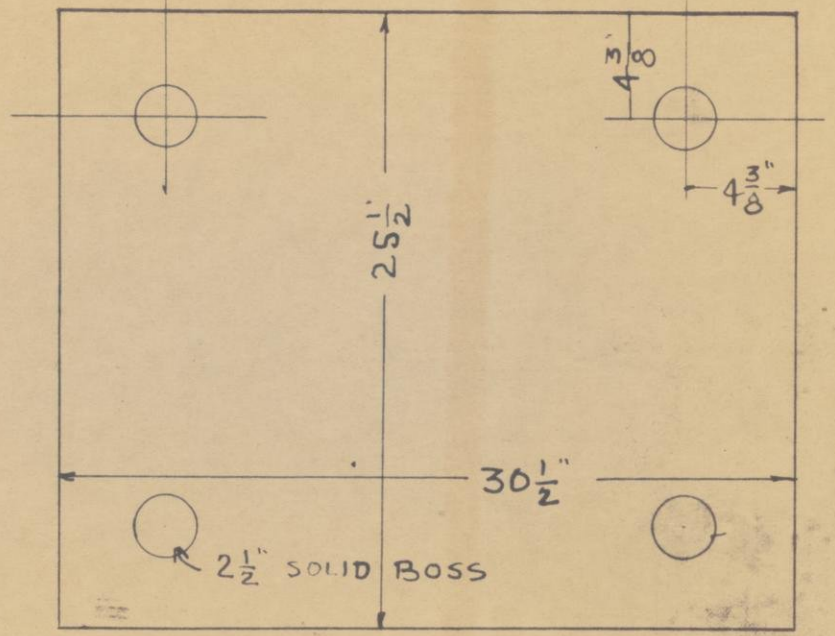

PATTERN NO. 748

SEE B. P. NO. 808-S(379-C)

THE HAMILTON MFG. CO.

DON'T REMOVE THIS LEAF FROM BOOK

OK

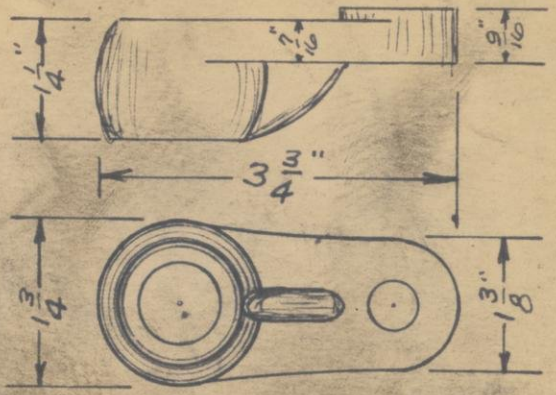

ARM FOR SPACING BAR ON SMOUSE TRUCK

PATTERN NO. 750

SEE B. P. NO. 381-C

THE HAMILTON MFG. CO.

OK

DON'T REMOVE THIS LEAF FROM BOOK

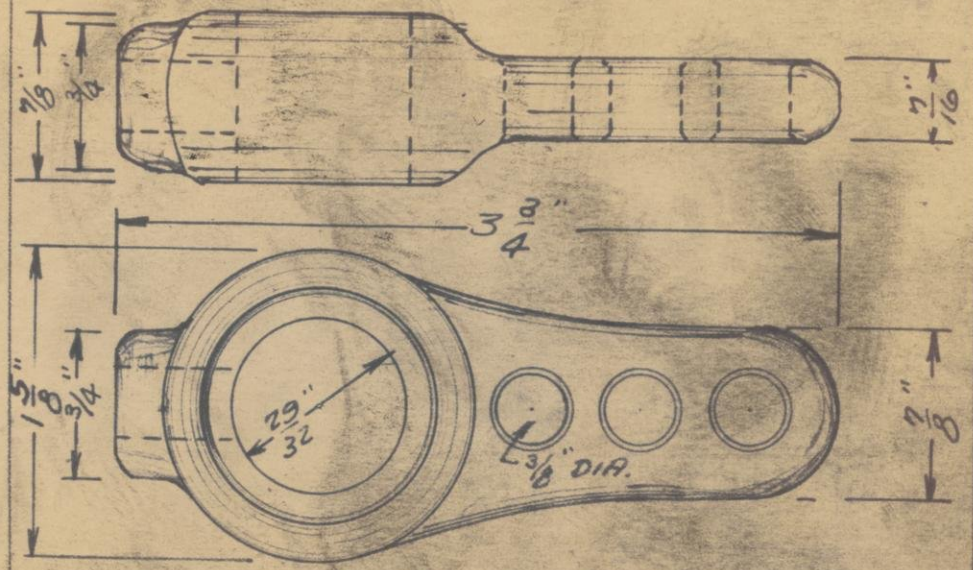

ARM FOR SPACING BAR ON SMOUSE TRUCK

PATTERN NO. 751

SEE B. P. NO. 382-C

THE HAMILTON MFG. CO.

DON'T REMOVE THIS LEAF FROM BOOK

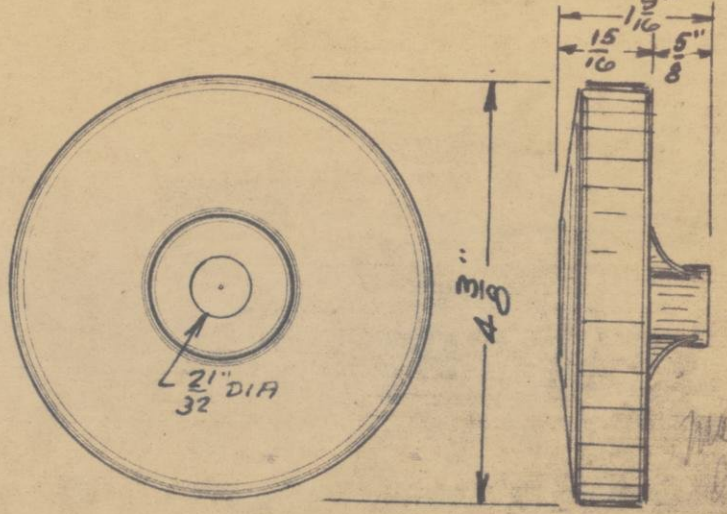

WHEEL FOR CASTER ON SMOUSE TRUCK

PATTERN NO. 752

SEE B. P. NO. 383-C

THE HAMILTON MFG. CO.

DON'T REMOVE THIS LEAF FROM BOOK

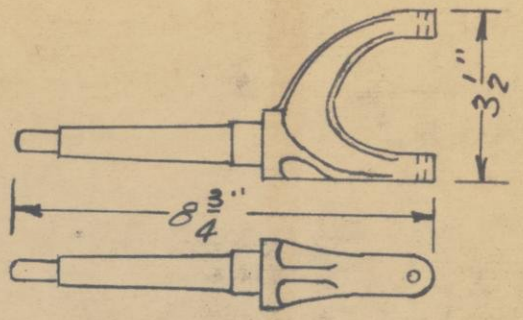

FORK FOR CASTER ON SMOUSE TRUCK

PATTERN NO. 753

SEE B. P. NO. 384-C

THE HAMILTON MFG. CO.

DON'T REMOVE THIS LEAF FROM BOOK

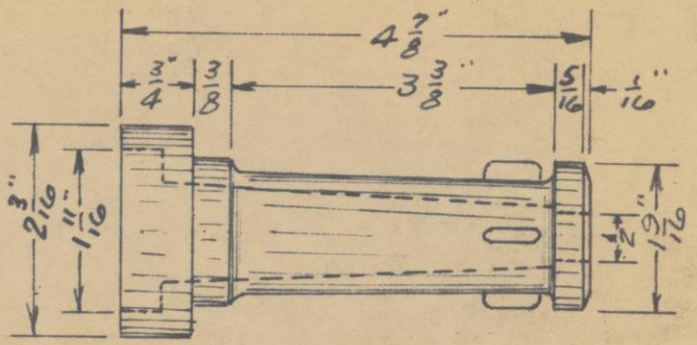

SOCKET FOR CASTER ON SMOUSE TRUCK

PATTERN NO. 754

SEE B. P. NO. 385-C

THE HAMILTON MFG. CO.

DON'T REMOVE THIS LEAF FROM BOOK

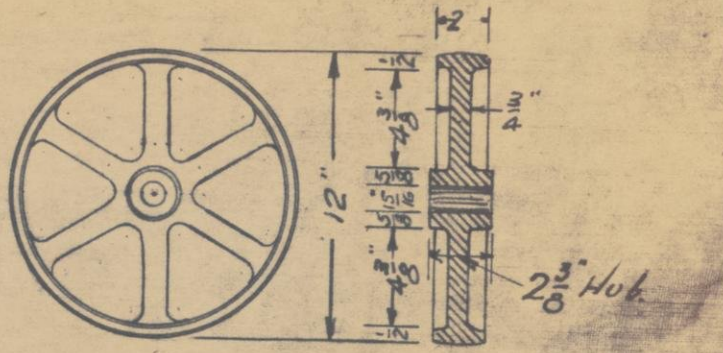

12" CAST IRON WHEEL

OLD KEYSTONE WHEEL

PATTERN NO. 756

SEE B. P. NO. 387-C

THE HAMILTON MFG. CO.

DON'T REMOVE THIS LEAF FROM BOOK

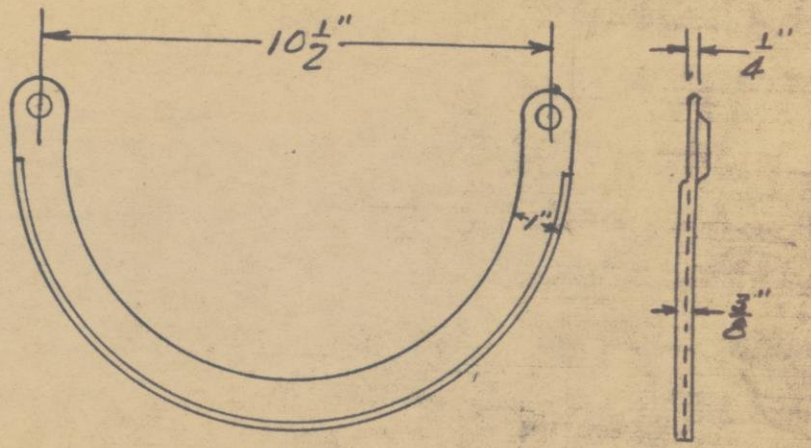

CIRCLE IRON FOR DRAWING TABLE B.P.# 12060-W

PATTERN NO. 737

SEE B. P. NO. 388-C

THE HAMILTON MFG. CO.

DON'T REMOVE THIS LEAF FROM BOOK

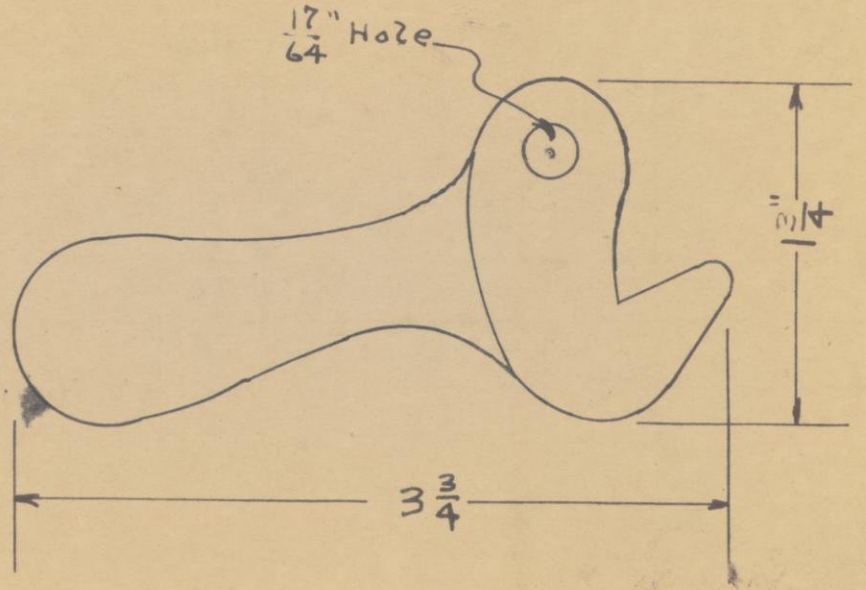

PATTERN NO. 762

SEE B. P. NO. 391-C

THE HAMILTON MFG. CO.

DON'T REMOVE THIS LEAF FROM BOOK

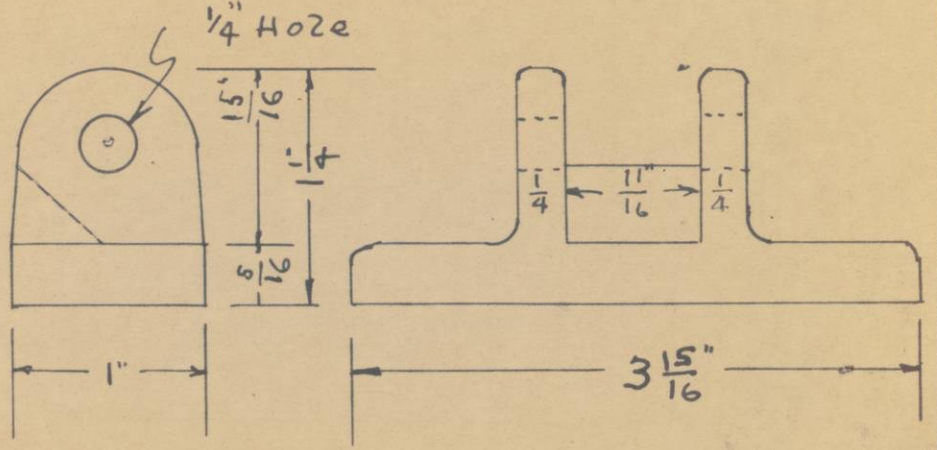

PATTERN NO. 763

SEE B. P. NO. 391-C

THE HAMILTON MFG. CO.

DON'T REMOVE THIS LEAF FROM BOOK

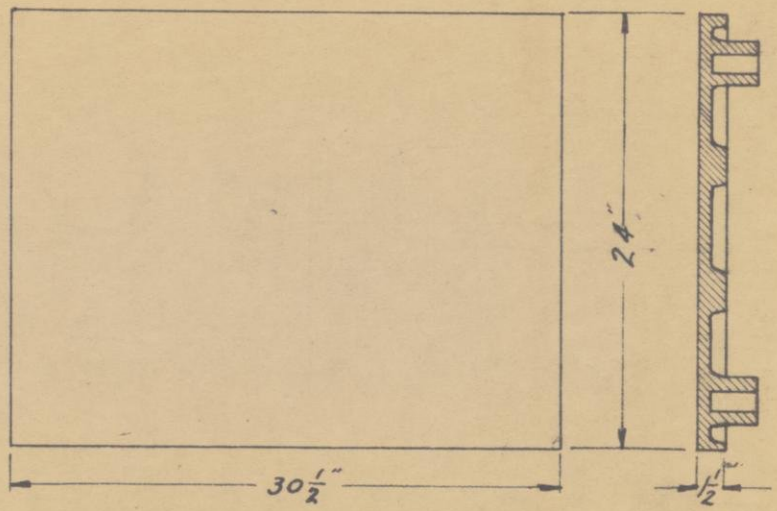

IRON TOP FOR HYDRAULIC TRUCK

PATTERN NO. 764

SEE B. P. NO. 392-C

THE HAMILTON MFG. CO.

DON'T REMOVE THIS LEAF FROM BOOK

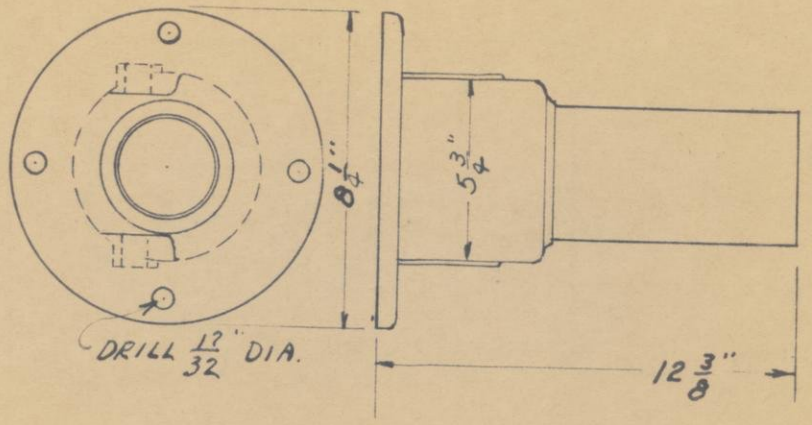

PLUNGER FOR HYDRAULIC TRUCK

PATTERN NO. 765

SEE B. P. NO. 393-C

REV. 5-15-26

THE HAMILTON MFG. CO.

DON'T REMOVE THIS LEAF FROM BOOK

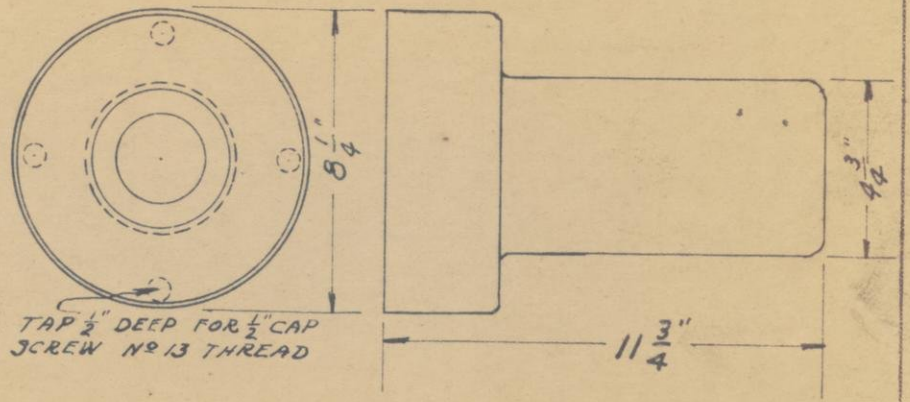

SLEEVE FOR HYDRAULIC TRUCK

PATTERN NO. 766

SEE B. P. NO. 394-C

REV. 5-13-26

THE HAMILTON MFG. CO.

DON'T REMOVE THIS LEAF FROM BOOK

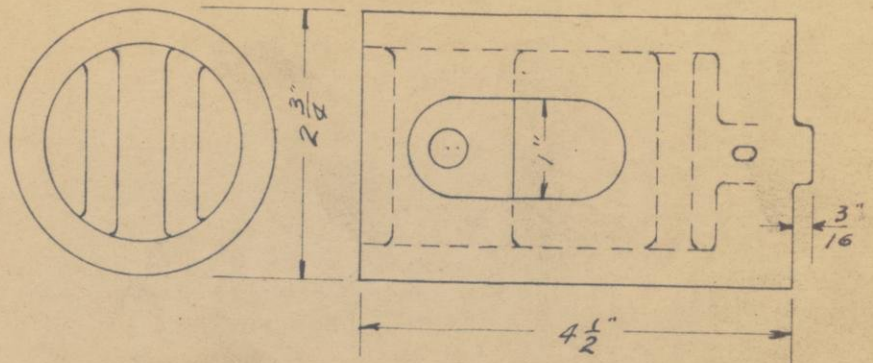

PISTON FOR HYDRAULIC TRUCK

PATTERN NO. 767

SEE B. P. NO. 395-C

THE HAMILTON MFG. CO.

DON'T REMOVE THIS LEAF FROM BOOK

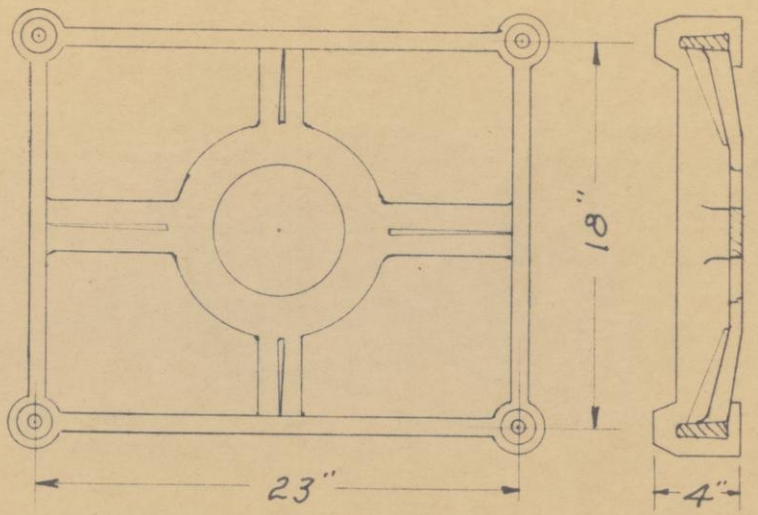

TOP FRAME FOR HYDRAULIC TRUCK

PATTERN NO. 768

SEE B. P. NO. 3.96-C

REV. 5-18-26

THE HAMILTON MFG. CO.

DON'T REMOVE THIS LEAF FROM BOOK

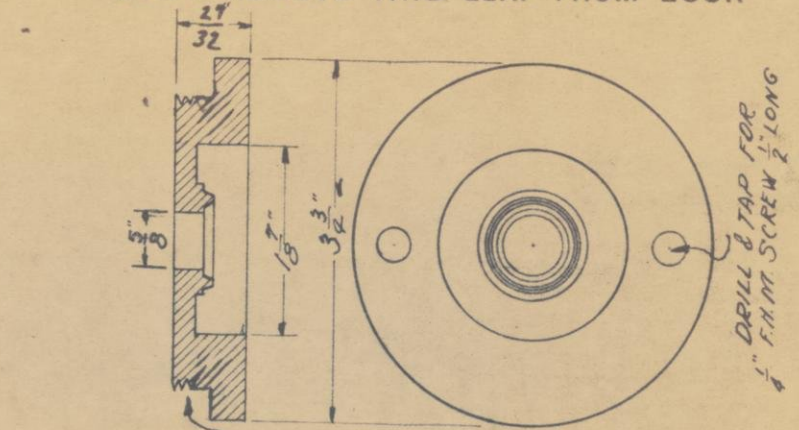

CAP FOR HYDRAULIC TRUCK

PATTERN NO. 769

SEE B. P. NO. 397-C REV. 5-19-26

THE HAMILTON MFG. CO.

DON'T REMOVE THIS LEAF FROM BOOK

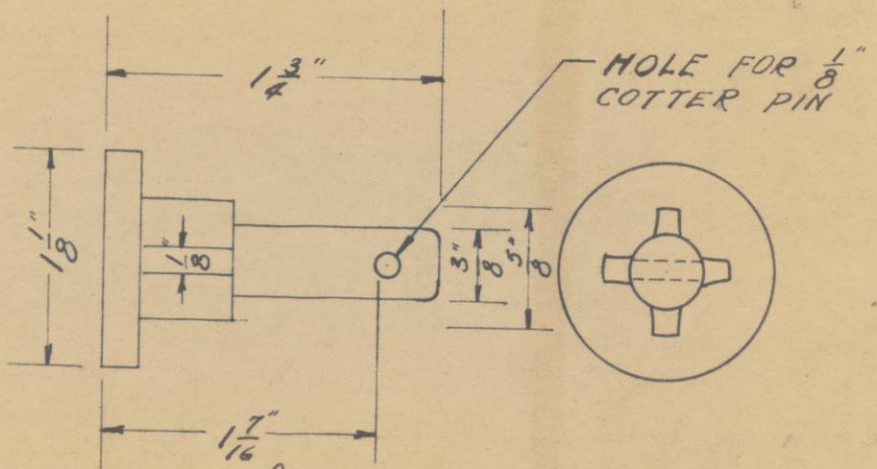

VALVES FOR HYDRAULIC TRUCK

PATTERN NO. 770

SEE B. P. NO. 398-C

THE HAMILTON MFG. CO.

DON'T REMOVE THIS LEAF FROM BOOK

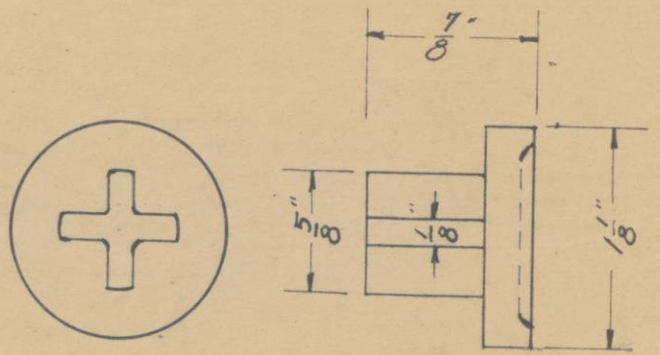

VALVES FOR HYDRAULIC TRUCK

PATTERN NO. 771

SEE B. P. NO. 398-C

THE HAMILTON MFG. CO.

DON'T REMOVE THIS LEAF FROM BOOK

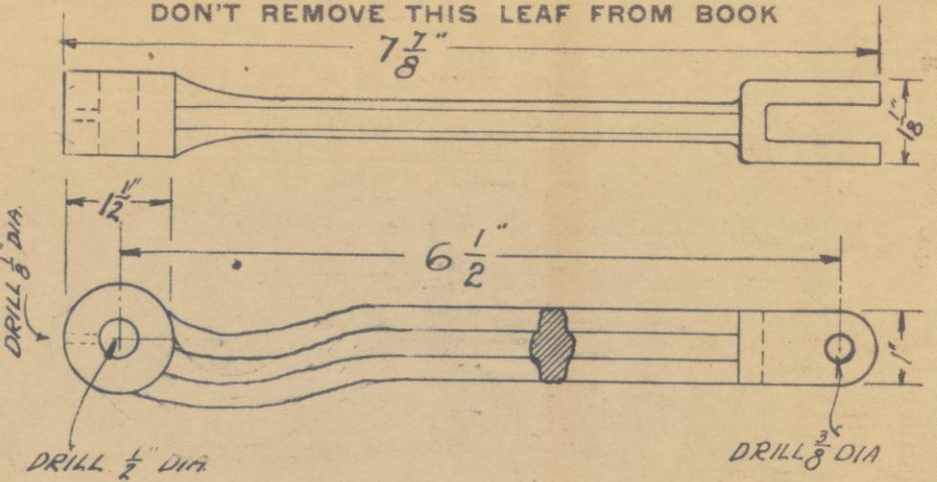

CONNECTING ROD FOR HYDRAULIC TRUCK

PATTERN NO. 772

SEE B. P. NO. 399-C REV. 5-18-26

THE HAMILTON MFG. CO.

DON'T REMOVE THIS LEAF FROM BOOK

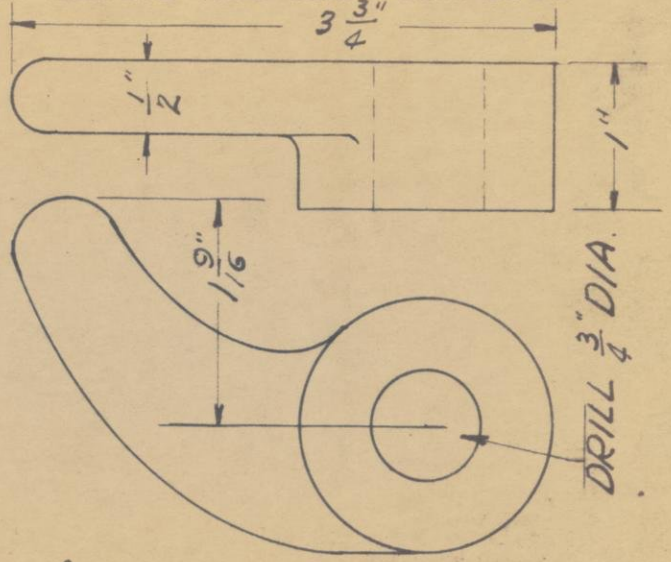

STOP FOR HYDRAULIC TRUCK

PATTERN NO. 773

SEE B. P. NO. 400-C

THE HAMILTON MFG. CO.

DON'T REMOVE THIS LEAF FROM BOOK

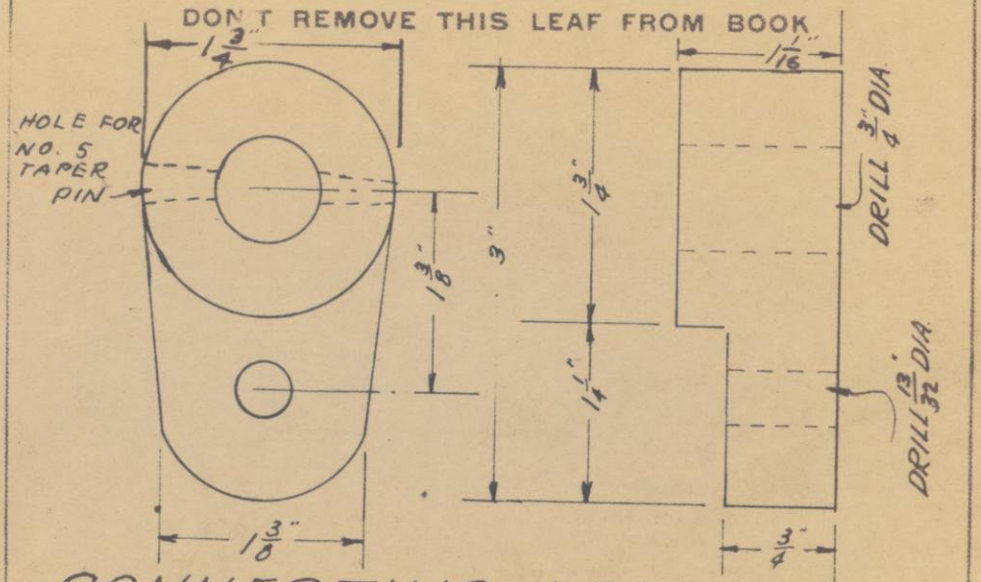

CONNECTING ARM FOR HYDRAULIC TRUCK

PATTERN NO. 774

SEE B. P. NO. 401-C

REV. 5-18-26

THE HAMILTON MFG. CO.

DON'T REMOVE THIS LEAF FROM BOOK

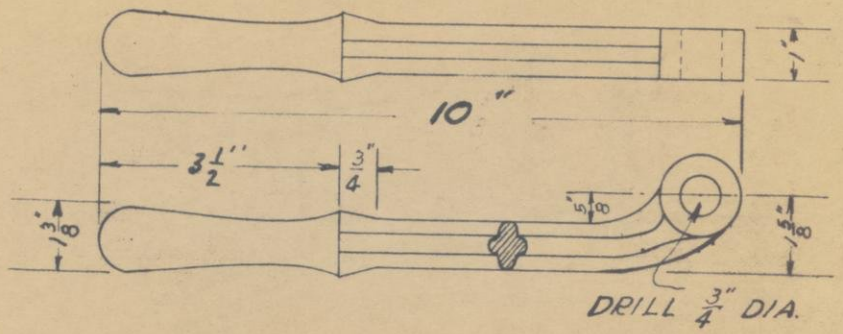

HANDLE FOR HYDRAULIC TRUCK

PATTERN NO. 775

SEE B. P. NO. 402-C

REV. 5-19-26

THE HAMILTON MFG. CO. OK

DON'T REMOVE THIS LEAF FROM BOOK

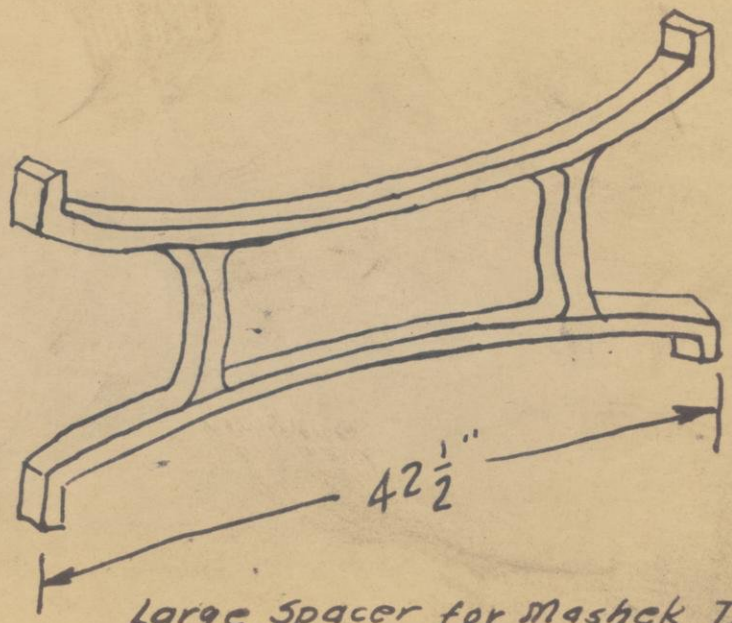

Large Spacer for Mashck Truck

PATTERN NO. 777

SEE B. P. NO. 404-C

THE HAMILTON MFG. CO. OK

DON'T REMOVE THIS LEAF FROM BOOK

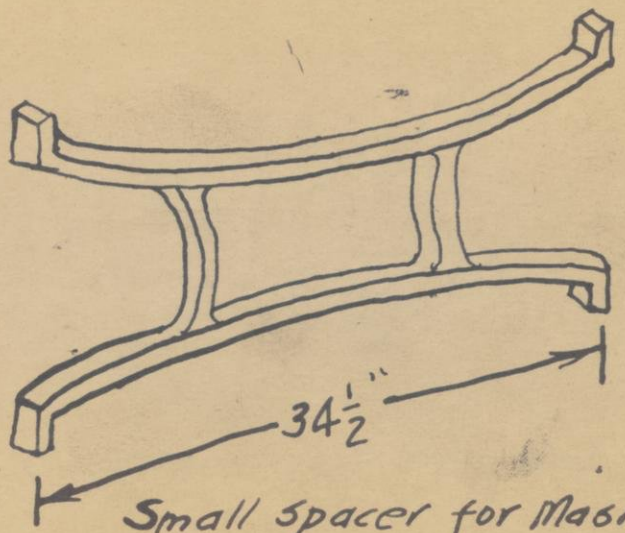

Small Spacer for Mashek Truck

PATTERN NO. 778

SEE B. P. NO. 404-A-C

THE HAMILTON MFG. CO.

DON'T REMOVE THIS LEAF FROM BOOK

OK

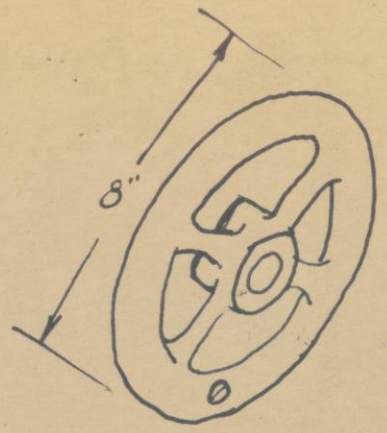

Hand Wheel for Mashek Truck

PATTERN NO. 780.

SEE B. P. NO. 406-C

THE HAMILTON MFG. CO.

DON'T REMOVE THIS LEAF FROM BOOK

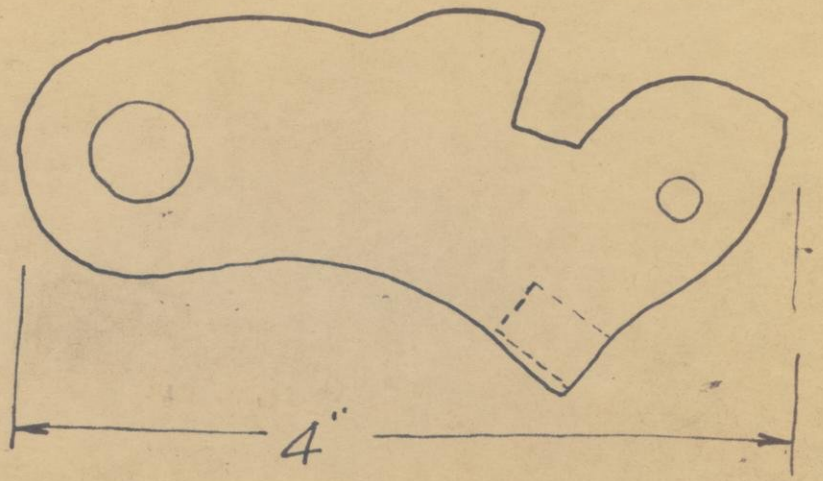

Pall for Mashek Truck

PATTERN NO. 783

SEE B. P. NO. 409-C

THE HAMILTON MFG. CO.

DON'T REMOVE THIS LEAF FROM BOOK

OK



Gauge for Mashek Truck

PATTERN NO. 785

SEE B. P. NO. 411-C

3-006

HAMILTON MFG. CO.

DO NOT REMOVE THIS LEAF FROM BOOK

BREEZY

DATE- 9-24-59

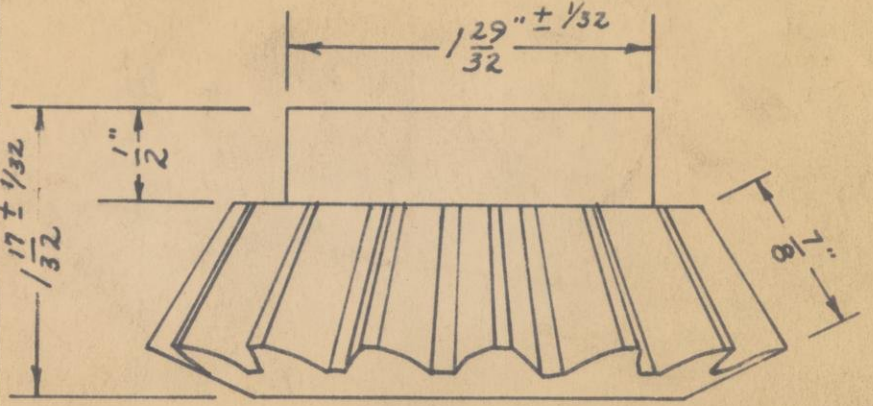

No. 5 PITCH

CUTTER 15 TEETH

OCT 5 1959

BEVELED GEAR FOR MASHEK TRUCK

SEE B. P. NO. 17328

~~MOULDING NO.~~ PATTERN No. 786

3-006

HAMILTON MFG. CO.

DO NOT REMOVE THIS LEAF FROM BOOK

BREEZY

DATE- 9-24-59

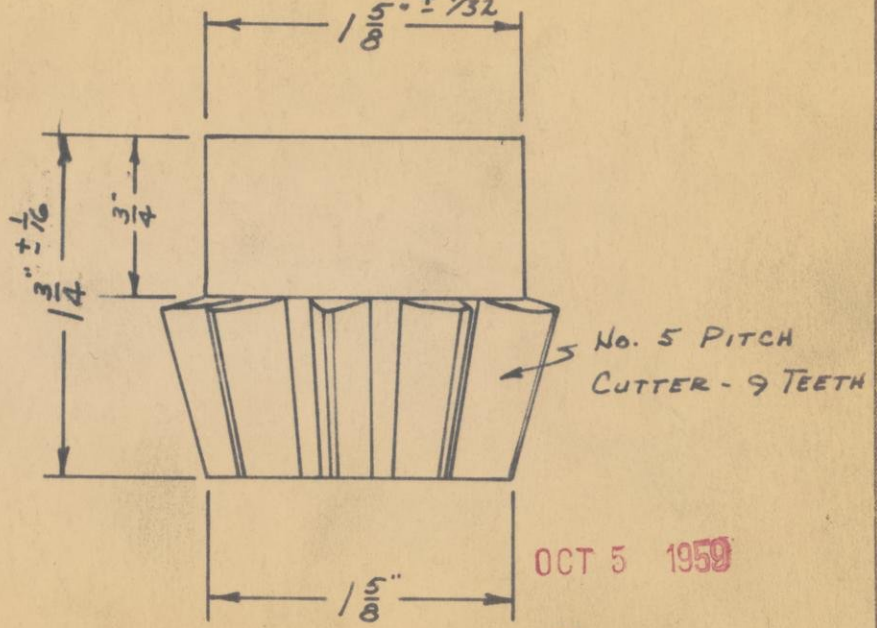

OCT 5 1959

PINION GEAR FOR MASHEK TRUCK

SEE B. P. NO. 17329

PATTERN No. 787

PUSH NO. 121—500—11-13-53

THE HAMILTON MFG. CO.

DON'T REMOVE THIS LEAF FROM BOOK

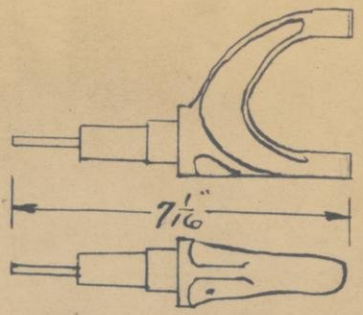

FORK FOR SMOUSE CASTER ON MASHEK TRUCK

PATTERN NO. 788

SEE B. P. NO. 414-C

THE HAMILTON MFG. CO.

DON'T REMOVE THIS LEAF FROM BOOK

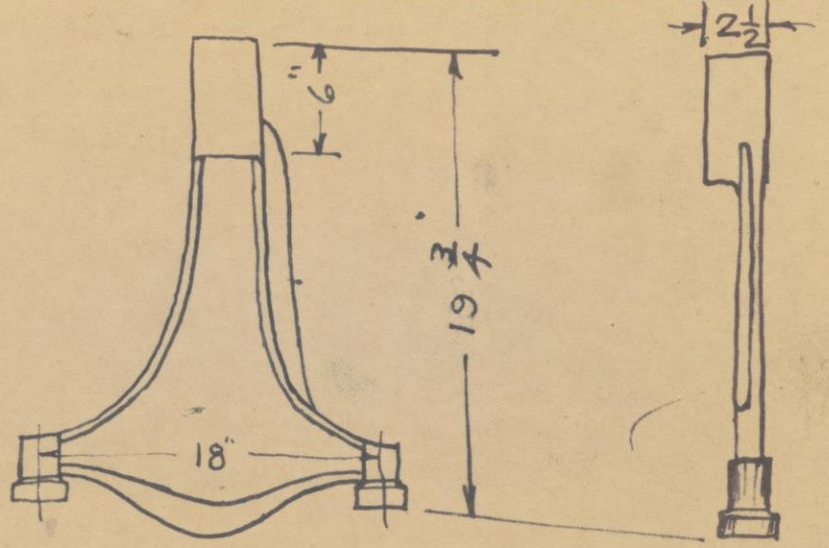

Special Casting for Mosher Truck

PATTERN NO. 790

SEE B. P. NO. 418-C

THE HAMILTON MFG. CO.

DON'T REMOVE THIS LEAF FROM BOOK

Plate for large Smouse Cooler.

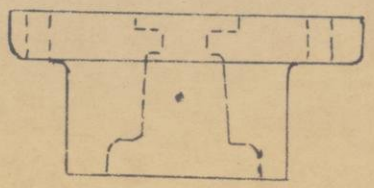

PATTERN NO. 793

SEE B. P. NO. 420 C

THE HAMILTON MFG. CO.

DON'T REMOVE THIS LEAF FROM BOOK

BRACKET FOR SWING SEAT

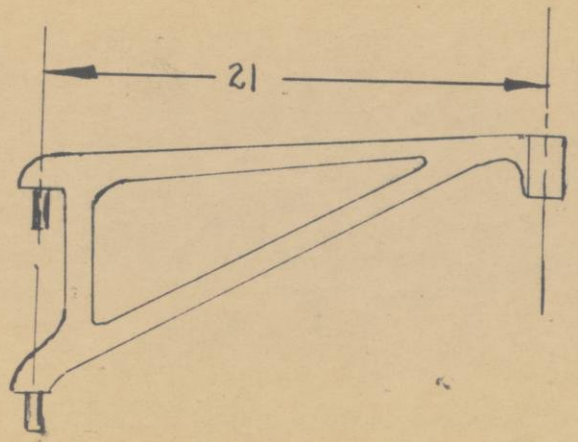

PATTERN NO. 797

SEE B. P. NO. 423C

15745

THE HAMILTON MFG. CO.

DON'T REMOVE THIS LEAF FROM BOOK

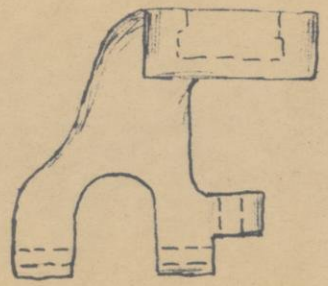

Fork. for Large size (Flat Plate)
Smouse Caster

PATTERN NO. 801

SEE B. P. NO. 426-C

THE HAMILTON MFG. CO.

DON'T REMOVE THIS LEAF FROM BOOK

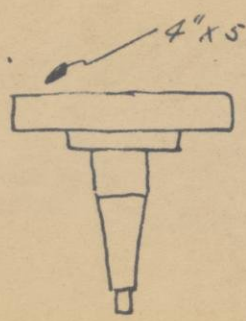

Stem for Large Size (Flat Plate)
Smooth Caster

PATTERN NO. 802

SEE B. P. NO. 427C

THE HAMILTON MFG. CO.

DON'T REMOVE THIS LEAF FROM BOOK

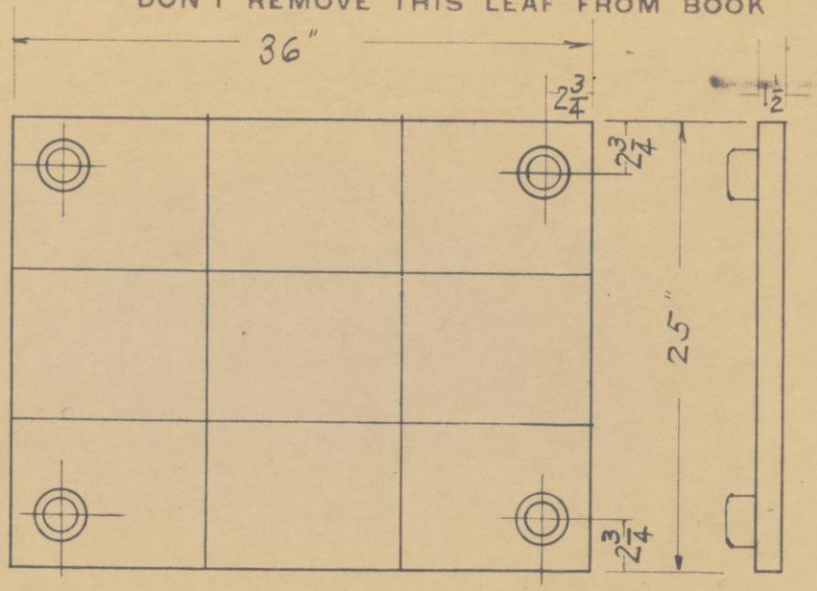

PATTERN NO. 803-T

SEE B. P. NO. 005851-A.

THE HAMILTON MFG. CO.

DON'T REMOVE THIS LEAF FROM BOOK

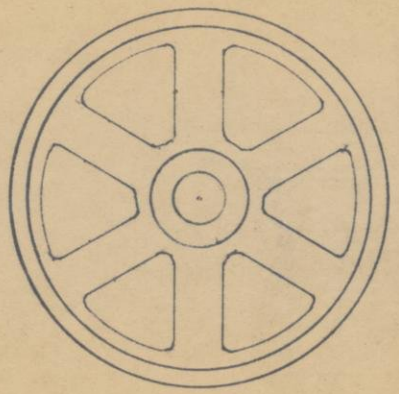

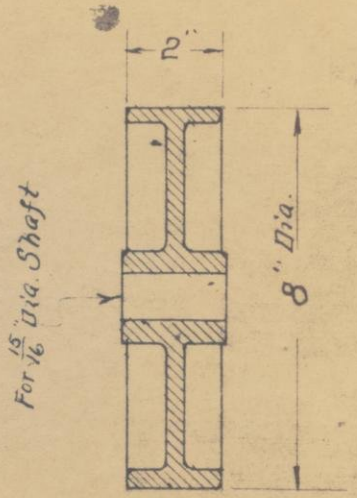

PATTERN NO. 804

SEE B. P. NO. 428-C

THE HAMILTON MFG. CO.

DON'T REMOVE THIS LEAF FROM BOOK

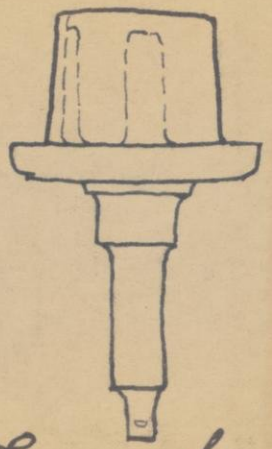

Stem for Large Lyre Mouse Caster
for 2½ x 2½ wood post

PATTERN NO. 806

SEE B. P. NO. 430C

THE HAMILTON MFG. CO.

DON'T REMOVE THIS LEAF FROM BOOK

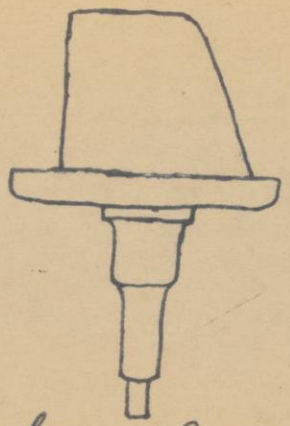

Stem for Large Size Smooth Caster For 2½ x 2½ L Post

PATTERN NO. 807

SEE B. P. NO. 431 C

THE HAMILTON MFG. CO.

DON'T REMOVE THIS LEAF FROM BOOK

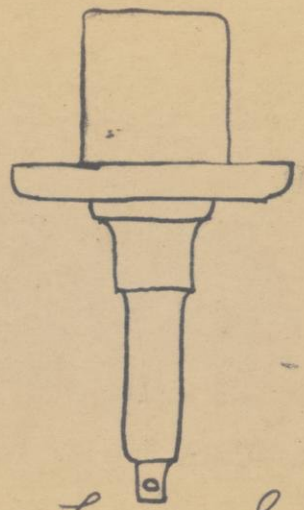

Stem for Large Size Smooth Caster for 3 x 2 x 1/8 L Post.

PATTERN NO. 808

SEE B. P. NO. 432-C

THE HAMILTON MFG. CO.

DON'T REMOVE THIS LEAF FROM BOOK

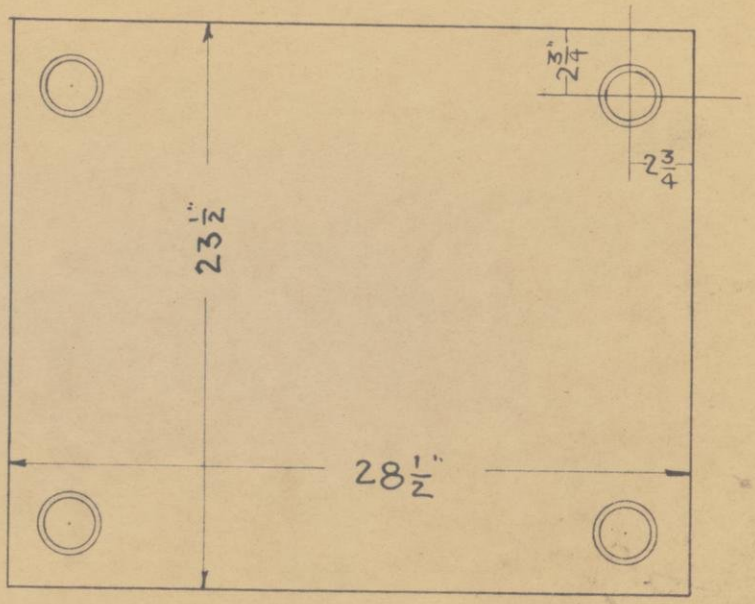

PATTERN NO. 809 T

SEE B. P. NO. 817-S

THE HAMILTON MFG. CO.

DON'T REMOVE THIS LEAF FROM BOOK

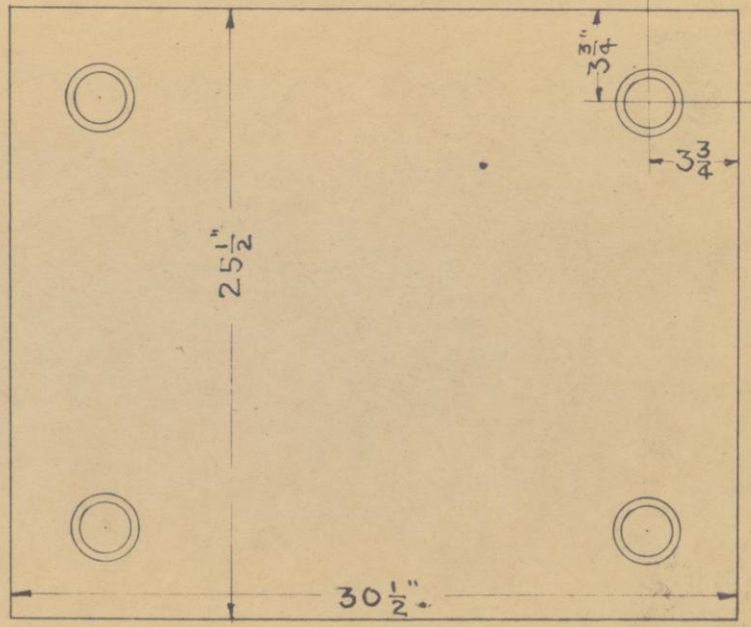

PATTERN NO. 810T

SEE B. P. NO. 818-S

THE HAMILTON MFG. CO.

DON'T REMOVE THIS LEAF FROM BOOK

18" UPRIGHT FOR MASHER TRUCK.

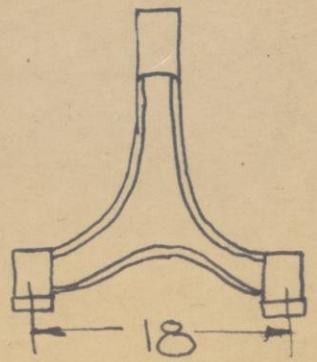

SEE B. P. NO. 433C PATTERN NO. 812

THE HAMILTON MFG. CO.

DON'T REMOVE THIS LEAF FROM BOOK

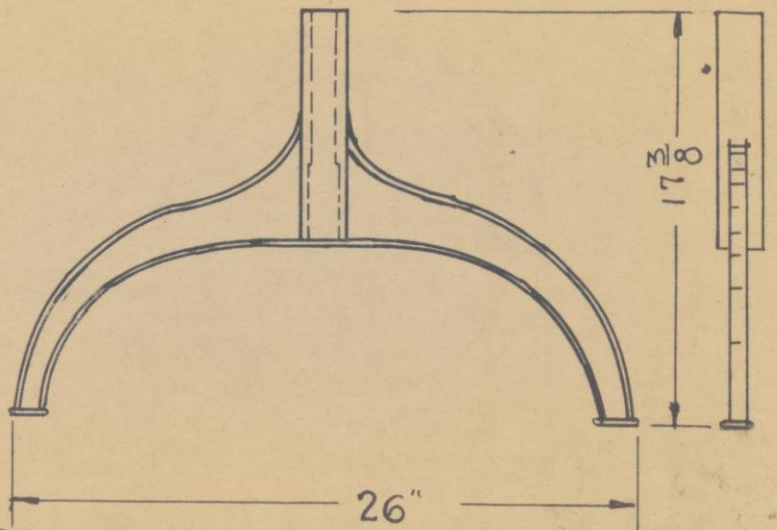

UPRIGHT FOR ADJ. DRAWING TABLE

PATTERN NO. 825

SEE B. P. NO.

THE HAMILTON MFG. CO.

DON'T REMOVE THIS LEAF FROM BOOK

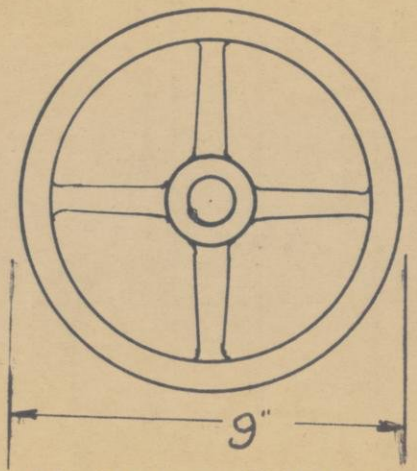

HAND WHEEL FOR ADJ. DRAWING TABLE

PATTERN NO. 826

SEE B. P. NO.

THE HAMILTON MFG. CO.

DON'T REMOVE THIS LEAF FROM BOOK

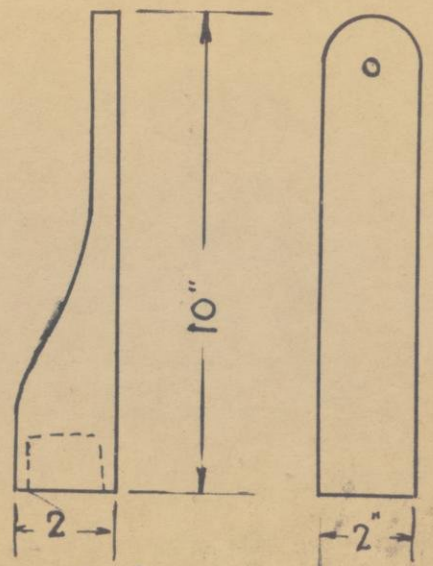

SUPPORT FOR ADJ. DRAWING TABLE

PATTERN NO. 827

SEE B. P. NO.

THE HAMILTON MFG. CO.

DON'T REMOVE THIS LEAF FROM BOOK

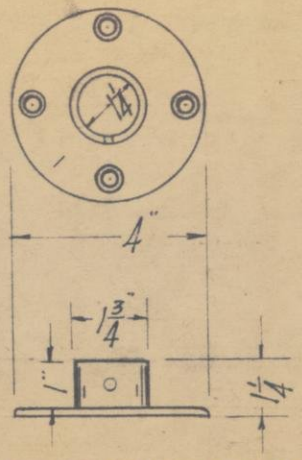

FLANGE FOR DISPLAY STAND PER
B. P. NO. 16838

PATTERN NO. 828

SEE B. P. NO. 436-C

THE HAMILTON MFG. CO.

DON'T REMOVE THIS LEAF FROM BOOK

ORDER NO 594 PLATES WHEN ORDERING THESE ARMS

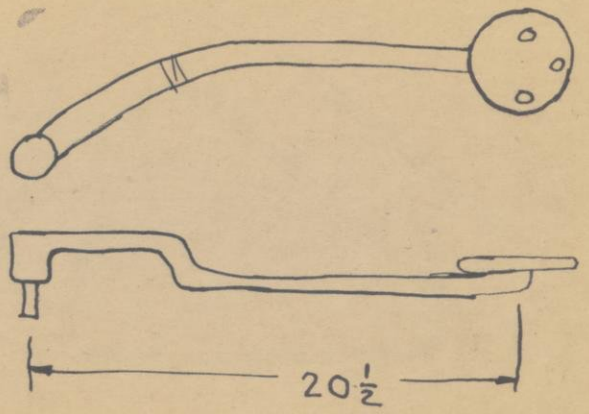

SWING TRAY BRACKET FOR ADJ. DRAWING TABLE

PATTERN NO. 833

SEE B. P. NO. 440-C

NO DRWG MADE

THE HAMILTON MFG. CO.

DON'T REMOVE THIS LEAF FROM BOOK

See revised design
Pat # 1677

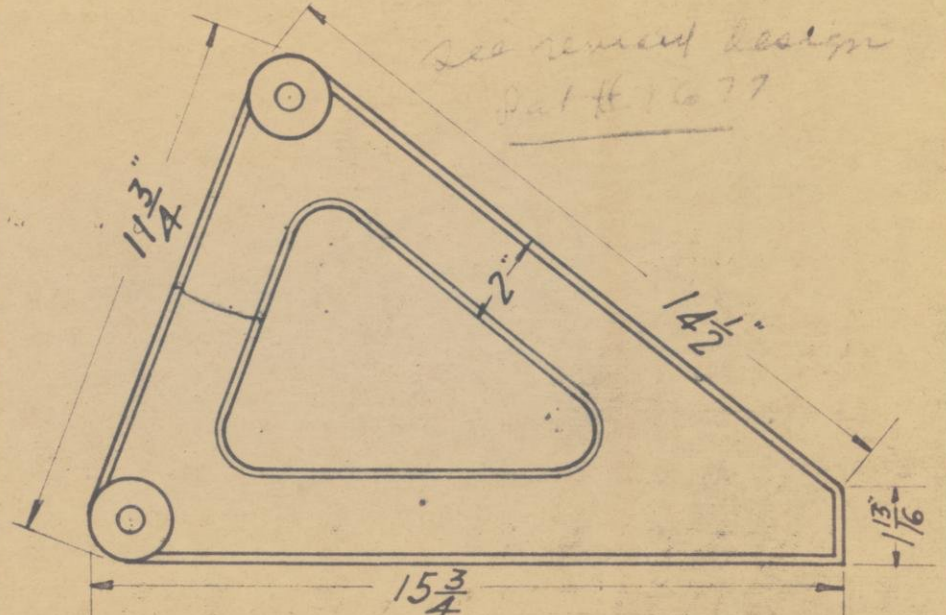

FORK FOR NO. 13491 DUMPING TRUCK

PATTERN NO. 840

SEE B. P. NO. 446-C

THE HAMILTON MFG. CO.

DON'T REMOVE THIS LEAF FROM BOOK

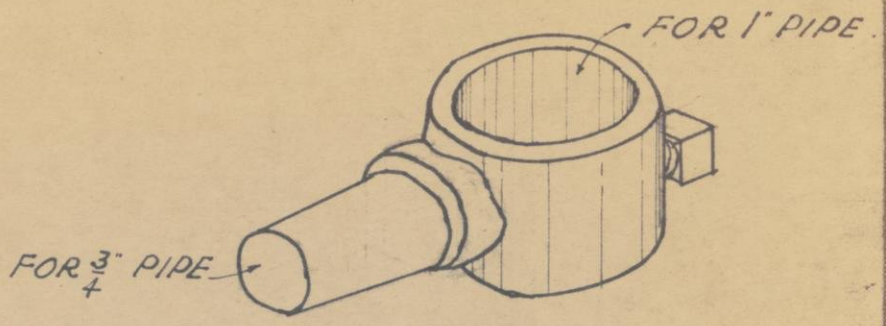

COPY HOOK FITTING.

PATTERN NO. 845

SEE B. P. NO. 451-C

THE HAMILTON MFG. CO.

DON'T REMOVE THIS LEAF FROM BOOK

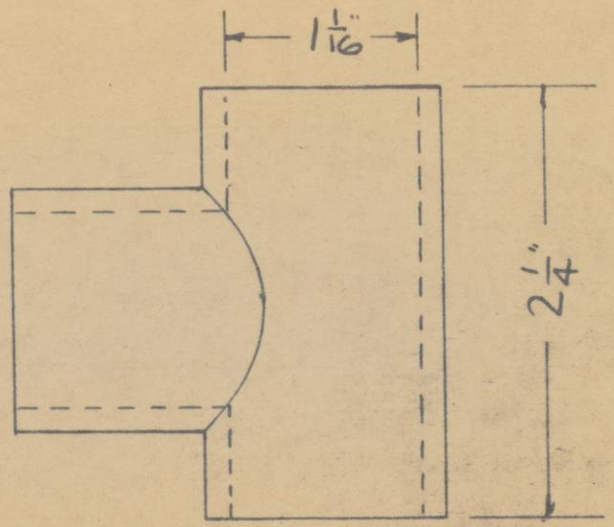

TEE COUPLING for DISPLAY RACK

1290-1 AW

PATTERN NO. 848

SEE B. P. NO. ~~17889~~

THE HAMILTON MFG. CO.

DON'T REMOVE THIS LEAF FROM BOOK

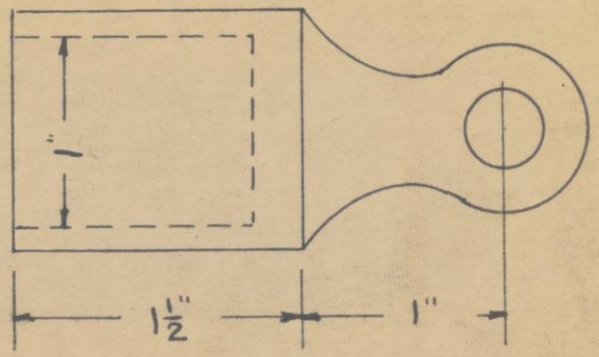

EYE COUPLING for DISPLAY RACK

1290-1 AW

PATTERN NO. 849

SEE B. P. NO. ~~17889~~

THE HAMILTON MFG. CO.

DON'T REMOVE THIS LEAF FROM BOOK

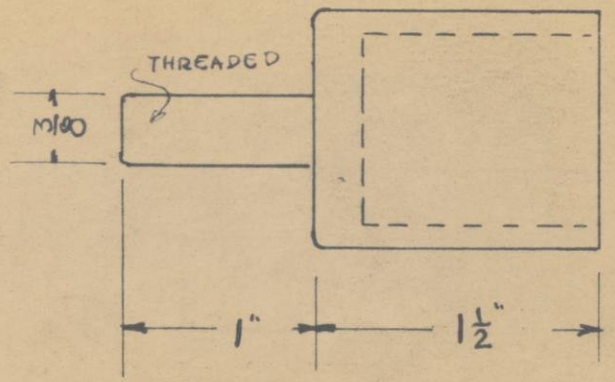

SCREW COUPLING FOR DISPLAY RACK

12901AW

PATTERN NO. 850

SEE B. P. NO. ~~17889~~

THE HAMILTON MFG. CO.

DON'T REMOVE THIS LEAF FROM BOOK

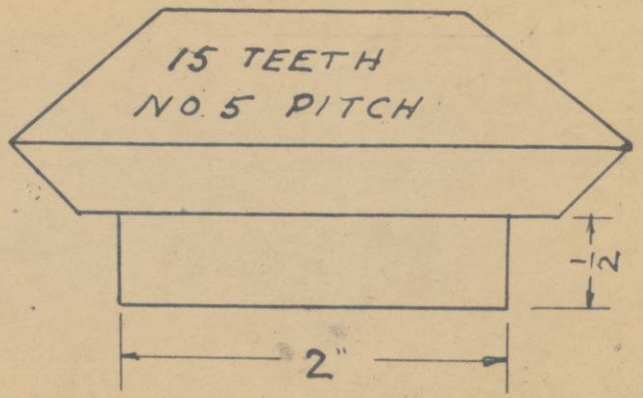

BEVELED GEAR FOR ADJ. DRWG TABLE

PATTERN NO. 859

SEE B. P. NO. NO DRAWING

THE HAMILTON MFG. CO.

DON'T REMOVE THIS LEAF FROM BOOK

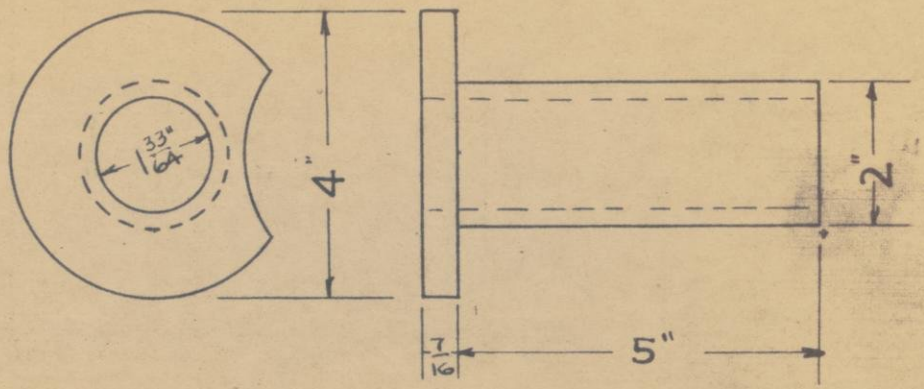

SLEEVE FOR GILDING PRESS

PATTERN NO. 864

SEE B. P. NO. 6640-2-W

THE HAMILTON MFG. CO.

DON'T REMOVE THIS LEAF FROM BOOK

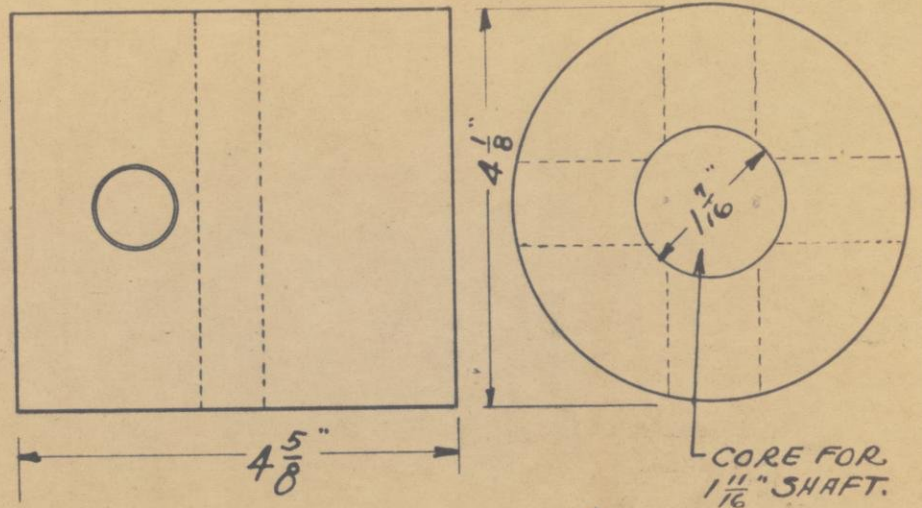

HEAD FOR GILDING PRESS.

PATTERN NO. 865.

SEE B. P. NO. 6640-5

THE HAMILTON MFG. CO.

DON'T REMOVE THIS LEAF FROM BOOK

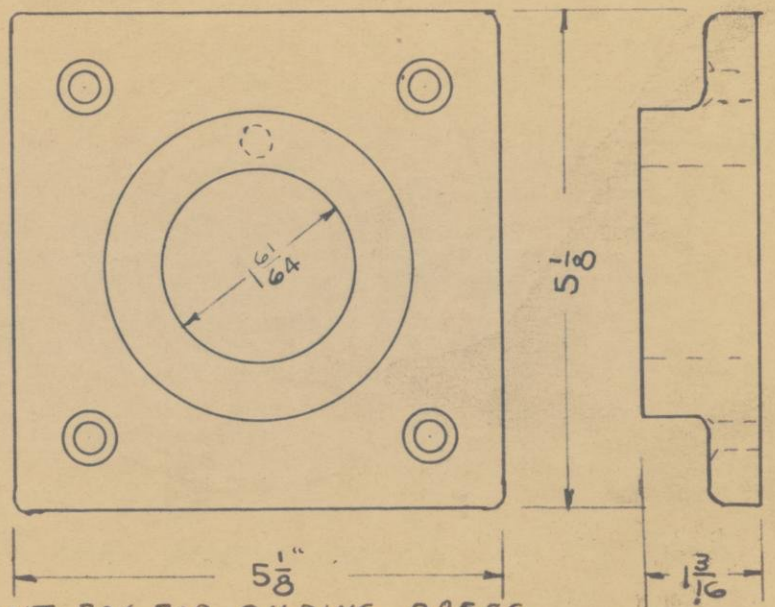

FRONT BOX FOR GILDING PRESS

PATTERN NO. 866

SEE B. P. NO. 6640-2W

THE HAMILTON MFG. CO.

DON'T REMOVE THIS LEAF FROM BOOK

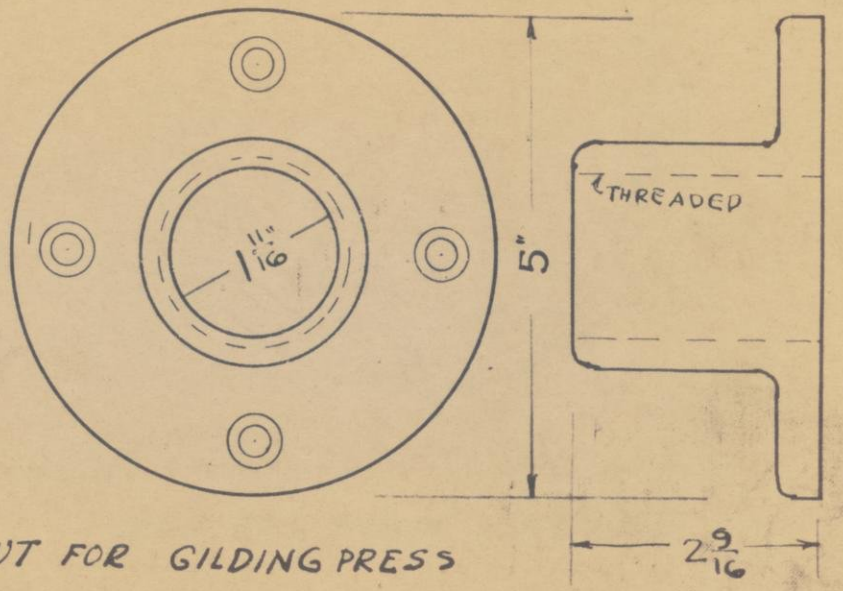

NUT FOR GILDING PRESS

PATTERN NO. 867

SEE B. P. NO. 6640-2W

THE HAMILTON MFG. CO.

DON'T REMOVE THIS LEAF FROM BOOK

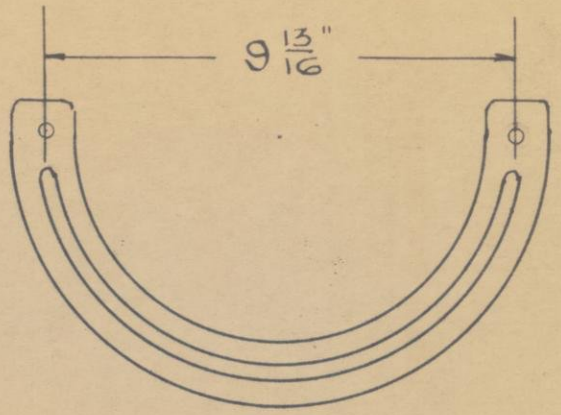

CIRCLE IRON FOR ECONOMY PERFECTION TABLES

PATTERN NO. 870

SEE B. P. NO. NO. DRAWING

THE HAMILTON MFG. CO.

DON'T REMOVE THIS LEAF FROM BOOK

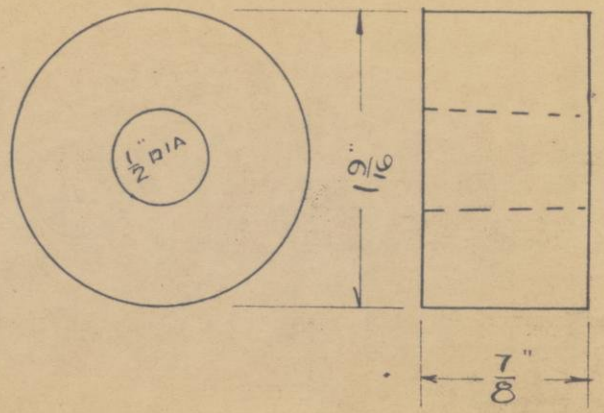

WASHER FOR PERFECTION TABLE

PATTERN NO. 871

SEE B. P. NO. NO. DRAWING

THE HAMILTON MFG. CO.

DON'T REMOVE THIS LEAF FROM BOOK

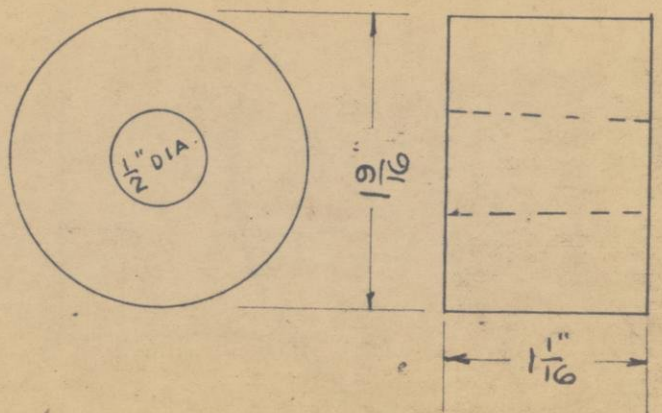

WASHER FOR PERFECTION TABLE

PATTERN NO. 872

SEE B. P. NO. NO DRAWING

THE HAMILTON MFG. CO.

DON'T REMOVE THIS LEAF FROM BOOK

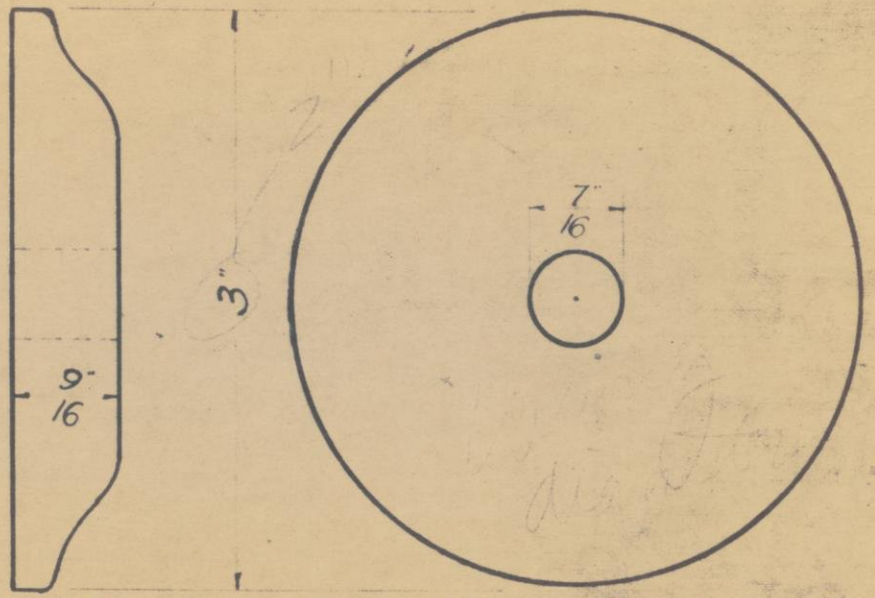

CAST IRON WASHER FOR DRAWING TABLE

PATTERN NO. 876

SEE B. P. NO. 19508 S.E.

THE HAMILTON MFG. CO.

DON'T REMOVE THIS LEAF FROM BOOK

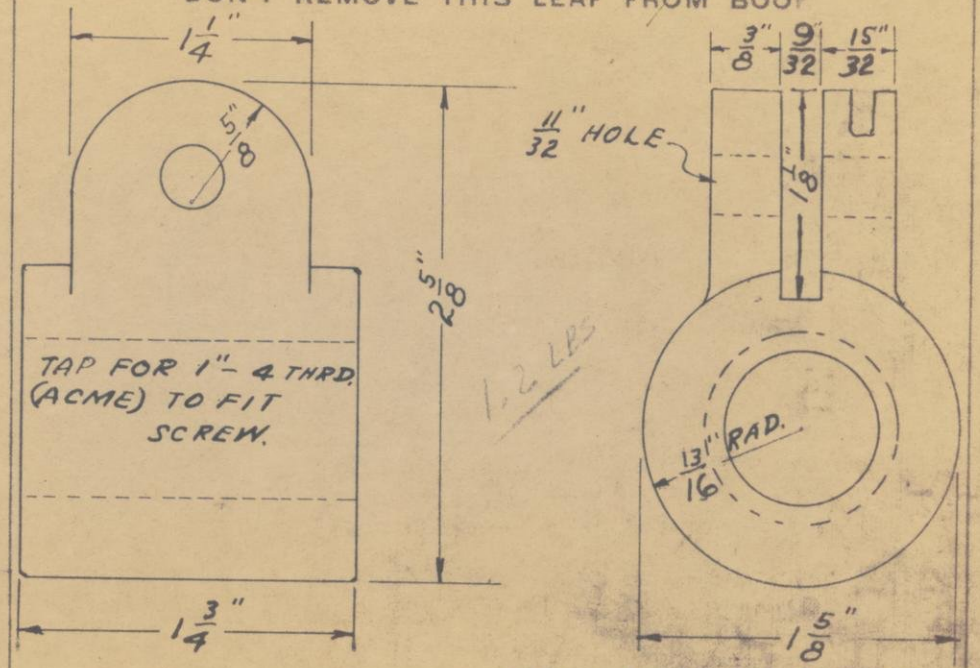

PATTERN NO. 877

SEE B. P. NO. 211 TO 216-C

REV. 2-17-26

THE HAMILTON MFG. CO.

DON'T REMOVE THIS LEAF FROM BOOK

DRILL AND TAP AS PER ORDER

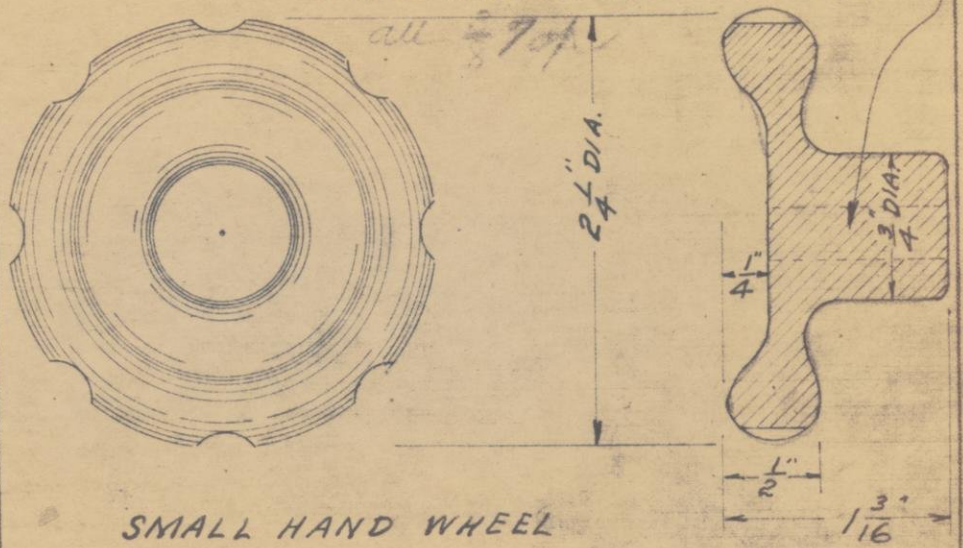

SMALL HAND WHEEL

PATTERN NO. 878

SEE B. P. NO. 461-C

THE HAMILTON MFG. CO.

DON'T REMOVE THIS LEAF FROM BOOK

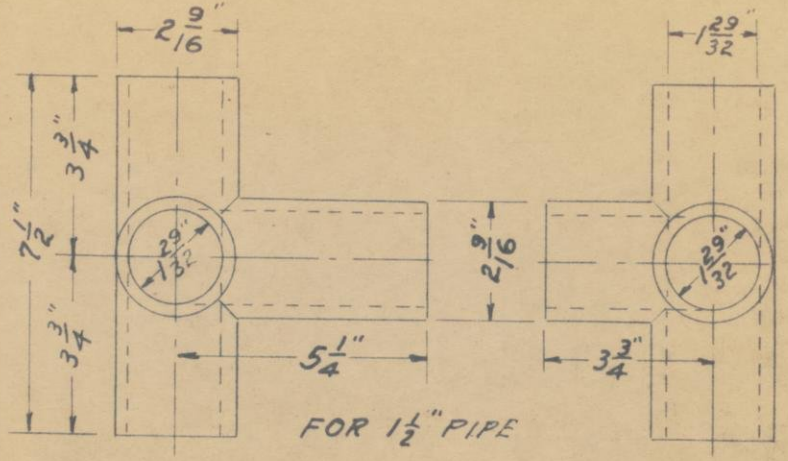

FOR 1½" PIPE

TEE FOR SMOUSE TRUCK

PATTERN NO. 879

SEE B. P. NO. 462-C

GRC
WAS MALL, IRON. 6-13-40

THE HAMILTON MFG. CO.

DON'T REMOVE THIS LEAF FROM BOOK

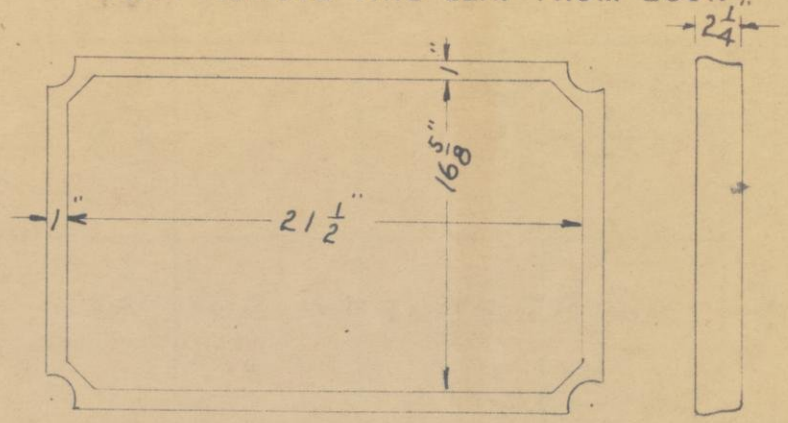

BOTTOM FRAME FOR PIPE FRAME TRUCKS

MAKE OF CAST IRON

SEE B. P. NO. 467-C

PATTERN NO. 882

THE HAMILTON MFG. CO.

DON'T REMOVE THIS LEAF FROM BOOK

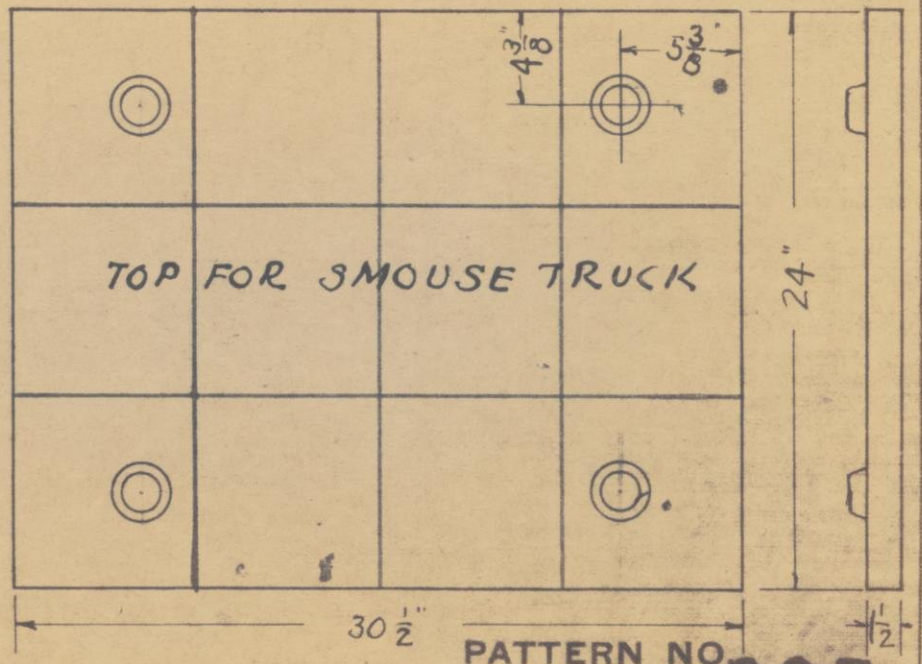

PATTERN NO. 883

SEE B. P. NO. 009485

THE HAMILTON MFG. CO.

DON'T REMOVE THIS LEAF FROM BOOK

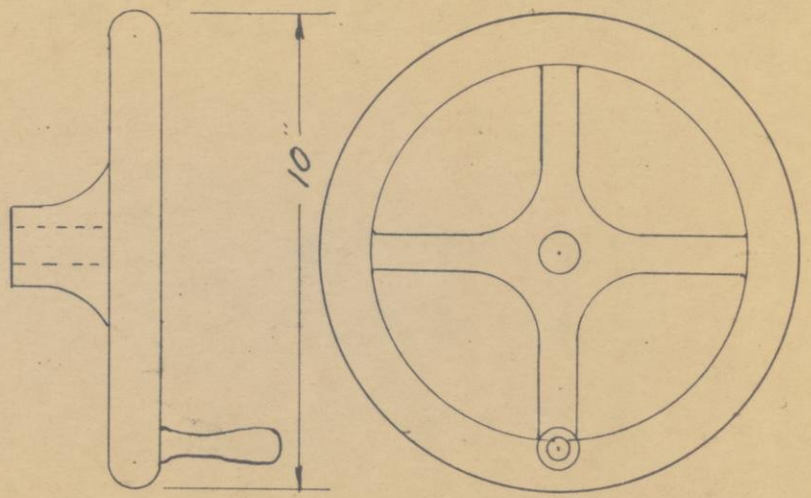

PATTERN NO. 884

SEE B. P. NO. 211 TO 216-C

REG. DRAFTING FILE

THE HAMILTON MFG. CO.

DON'T REMOVE THIS LEAF FROM BOOK

CLAMP FOR ½ SIZE EXHIBITION RACK

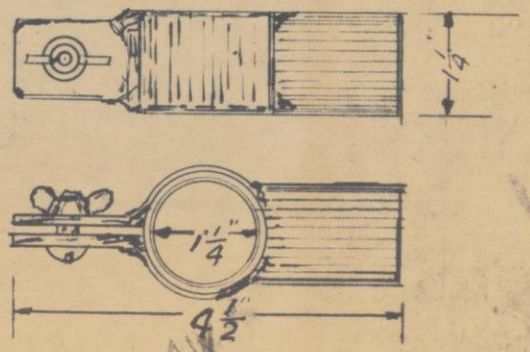

1240-1A11

PATTERN NO. 885

SEE B. P. NO. 19751

THE HAMILTON MFG. CO.

DON'T REMOVE THIS LEAF FROM BOOK

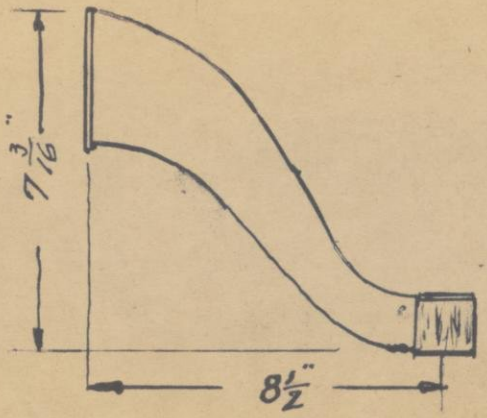

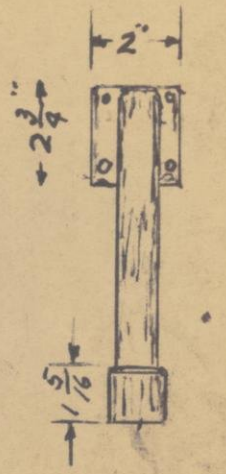

PATTERN NO. 886

SEE B. P. NO. 463-C

THE HAMILTON MFG. CO.

DON'T REMOVE THIS LEAF FROM BOOK

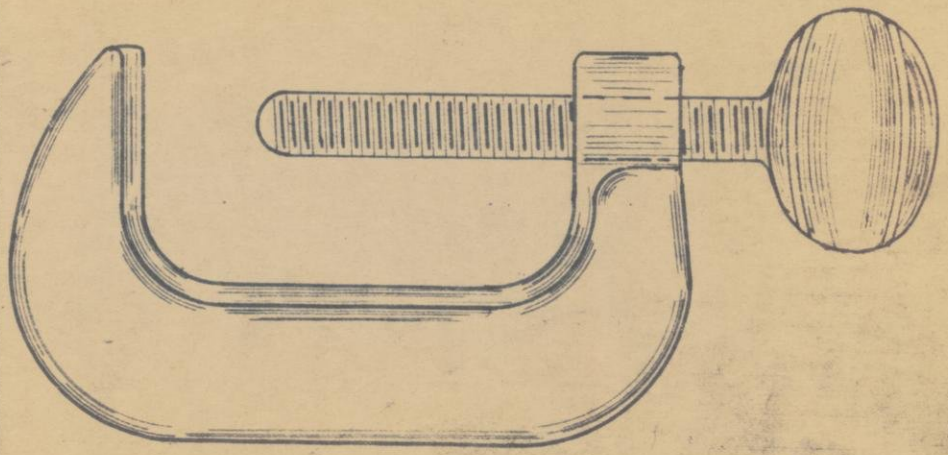

FULL - SIZE

PATTERN NO. 887

SEE B. P. NO. 464-C

13

THE HAMILTON MFG. CO.

DON'T REMOVE THIS LEAF FROM BOOK

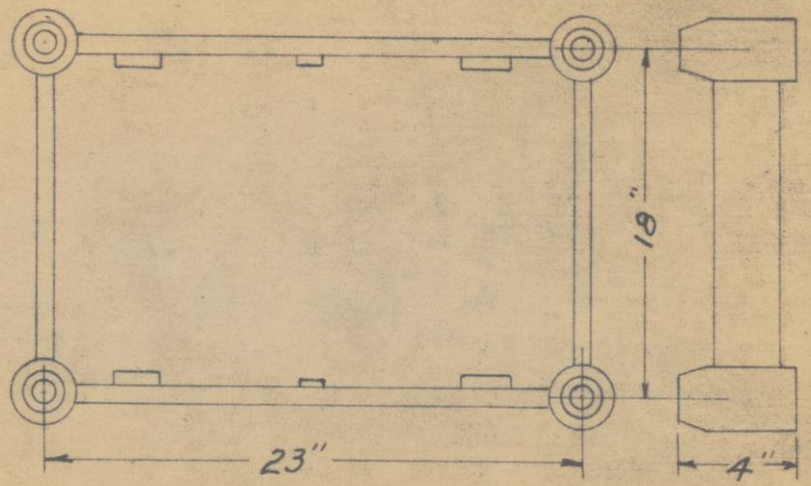

TOP FRAME FOR SMOUSE TRUCK
MALLEABLE IRON

SEE B. P. NO. 465-C PATTERN NO. 888

CHANGED FROM CAST IRON TO MALLEABLE IRON EK 9-6-28

THE HAMILTON MFG. CO.

DON'T REMOVE THIS LEAF FROM BOOK

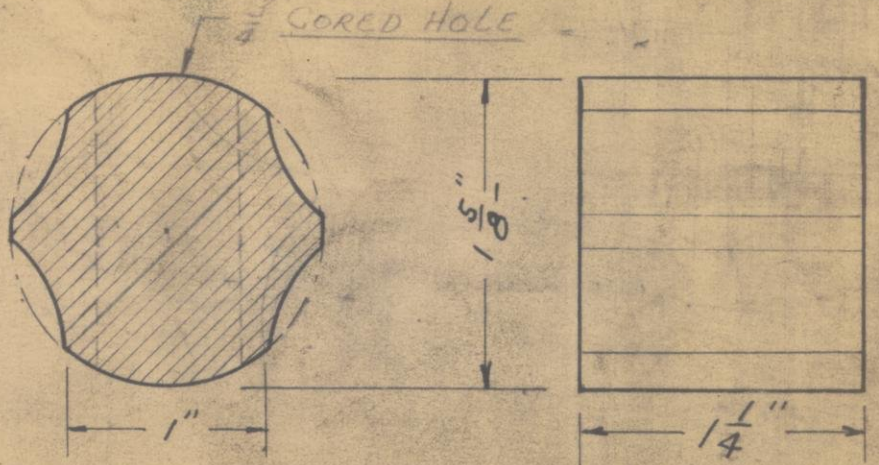

PLUG FOR 1 1/2" - PIPE

PATTERN NO. 889

SEE B. P. NO. 467-C

THE HAMILTON MFG. CO.

DON'T REMOVE THIS LEAF FROM BOOK

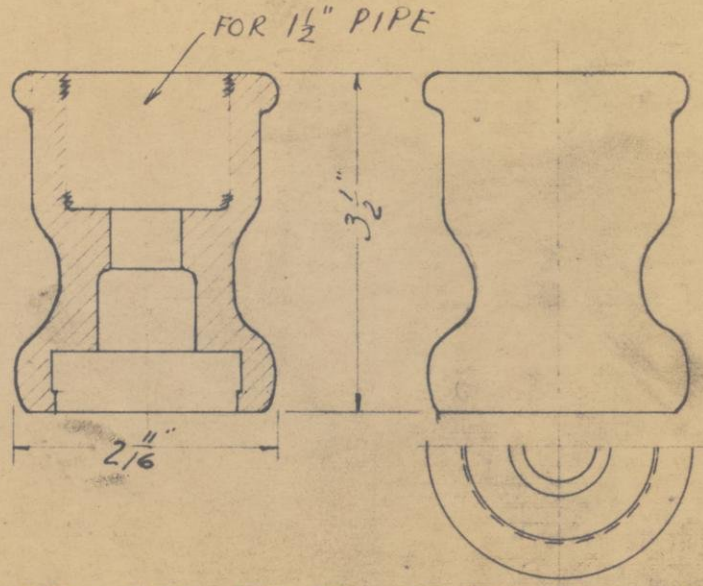

SOCKET FOR SMOUSE CASTER

PATTERN NO. 891

SEE B. P. NO. 469-C

14

THE HAMILTON MFG. CO.

DON'T REMOVE THIS LEAF FROM BOOK

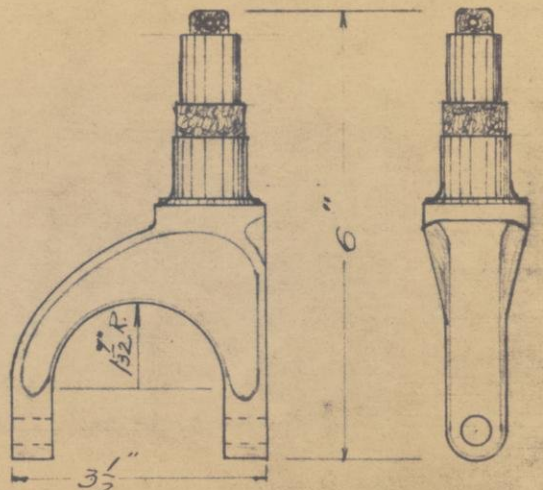

FORK FOR SMOUSE CASTER

PATTERN NO. 892

SEE B. P. NO. 470-C

THE HAMILTON MFG. CO.

DON'T REMOVE THIS LEAF FROM BOOK

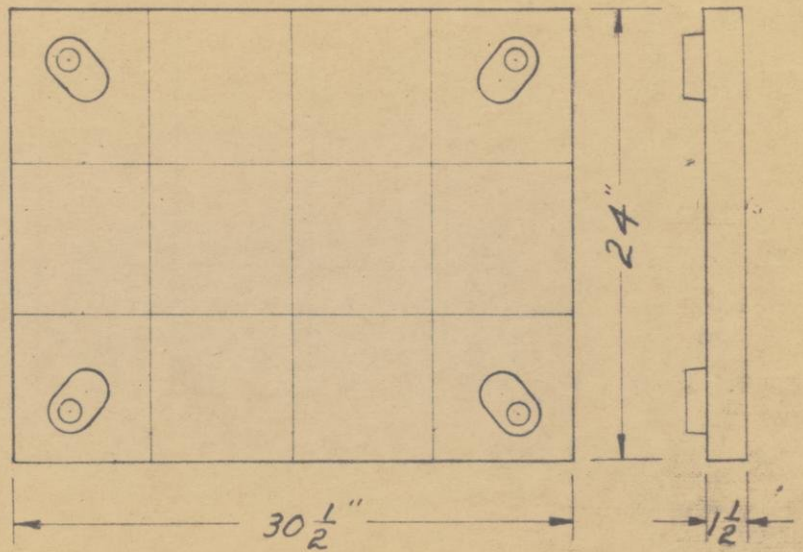

NEW STYLE TOP FOR SMOUSE TRUCK

PATTERN NO. 893

SEE B. P. NO. 15735-S

THE HAMILTON MFG. CO.

DON'T REMOVE THIS LEAF FROM BOOK

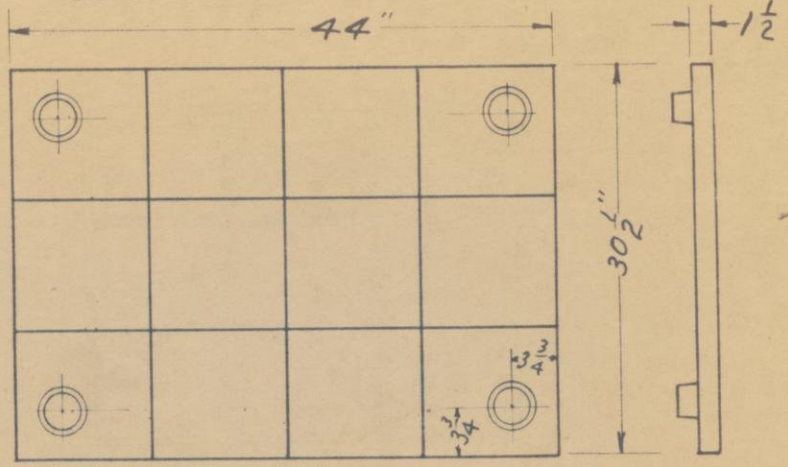

DBL. PAGE TOP FOR MAKE-UP TRUCK

PATTERN NO. 894

SEE B. P. NO. 0010197

THE HAMILTON MFG. CO.

DON'T REMOVE THIS LEAF FROM BOOK

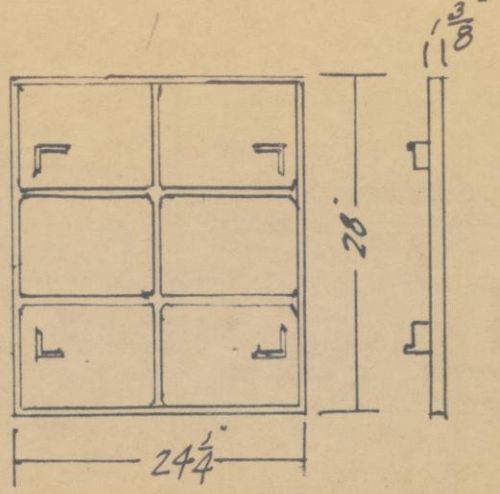

FOR NO. 811-A TRUCK

PATTERN NO 895

SEE B. P. NO. 004363-A

THE HAMILTON MFG. CO.

DON'T REMOVE THIS LEAF FROM BOOK

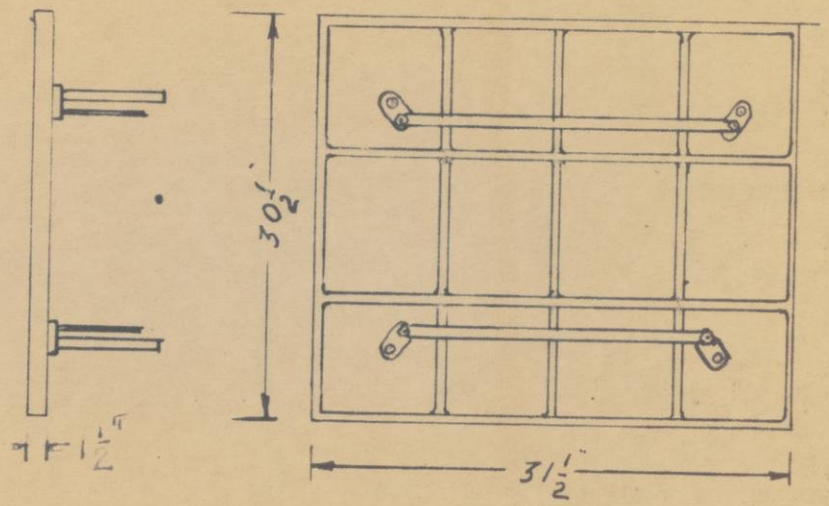

- SPECIAL IRON TOP FOR SMOUSE TRUCK. -

PATTERN NO. 896.

SEE B. P. NO. 471-C.

THE HAMILTON MFG. CO.

DON'T REMOVE THIS LEAF FROM BOOK

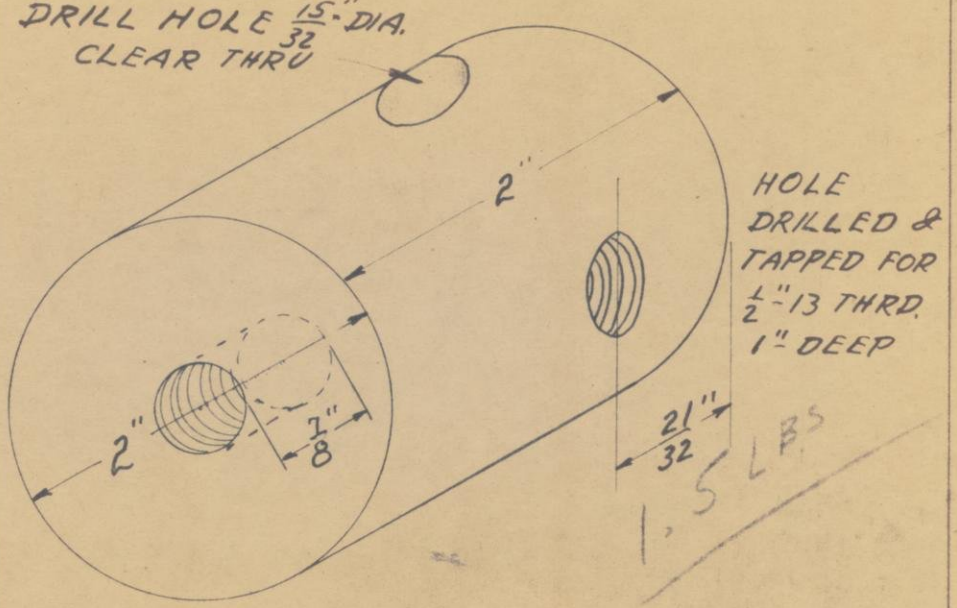

217AF

PATTERN NO. 897

SEE B. P. NO. ~~211-216 F~~

THE HAMILTON MFG. CO.

DON'T REMOVE THIS LEAF FROM BOOK

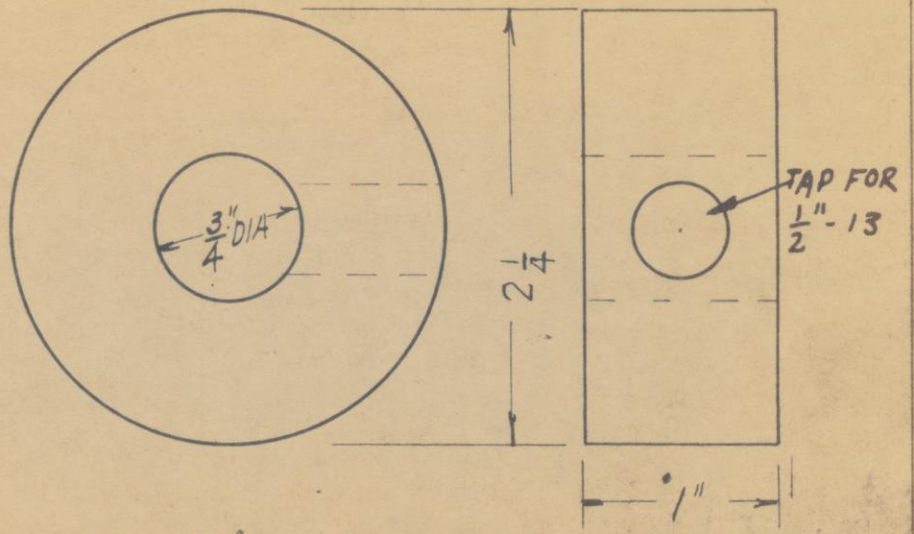

COLLAR FOR TRUCK

PATTERN NO. 898

SEE B. P. NO. 472 C

THE HAMILTON MFG. CO.

DON'T REMOVE THIS LEAF FROM BOOK

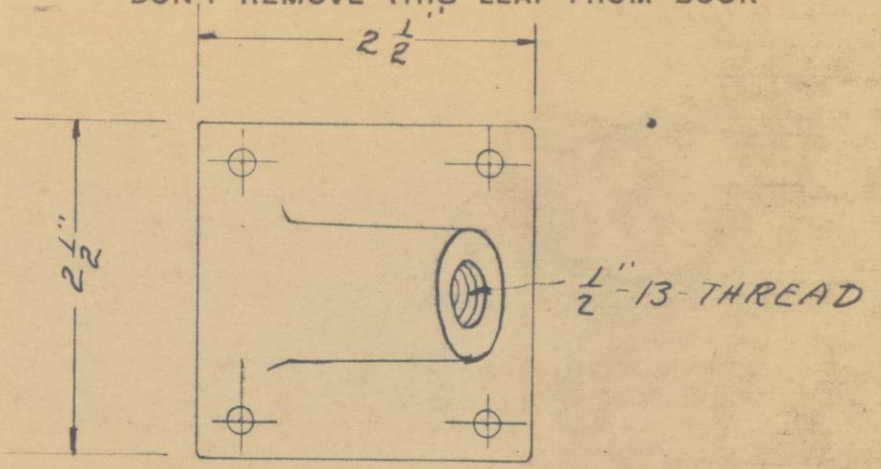

FASTENER FOR 217 - TABLE

PATTERN NO. 901

SEE B. P. NO. 217 WC4

OLD NO. 211-216-N

MANITOWOC GREY IRON FOUNDRY

2701 Division Street — (414) 684-0311

Manitowoc, Wisconsin 54220

Date _____

TO HAMILTON MFG CO
1316-18TH STREET
TWO RIVERS, WI 54241

Quantity		Contents	Amount
1		SQUEEZER PATTERN - 796 & 797	
2		SQUEEZER PATTERNS 1737 & 1747	
		(OBSOLETE PATTERNS)	

Shipping Containers		Surcharge
_____	Barrel(s)	
_____	Pallet(s)	
_____	Divider(s)	
_____	Large Box(es)	Freight
_____	Medium Box(es)	
_____	Small Box(es)	

Packed by _____

Received by H. E. Clough

No Claims will be allowed unless this slip is attached.

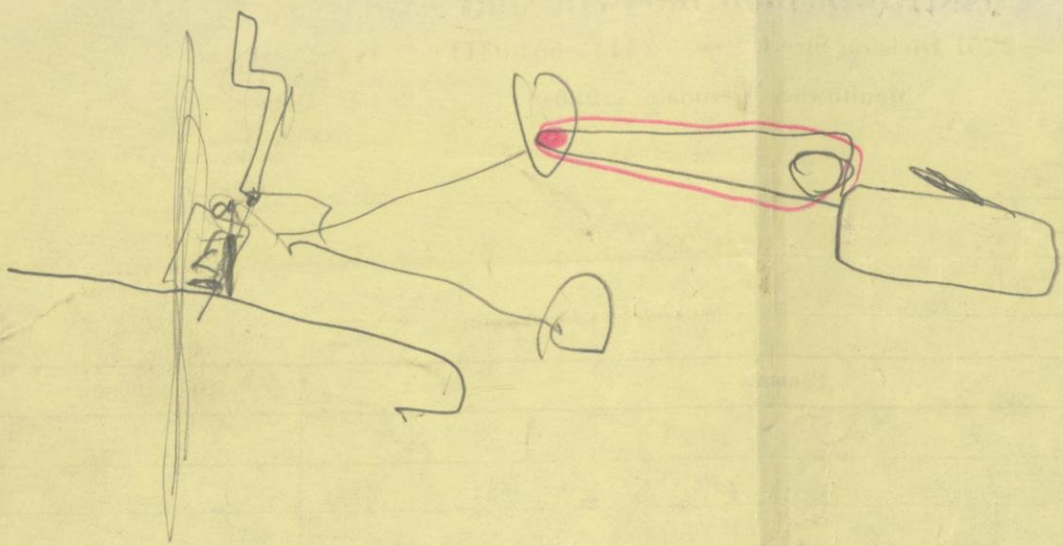

THE HAMILTON MFG. CO.

DON'T REMOVE THIS LEAF FROM BOOK

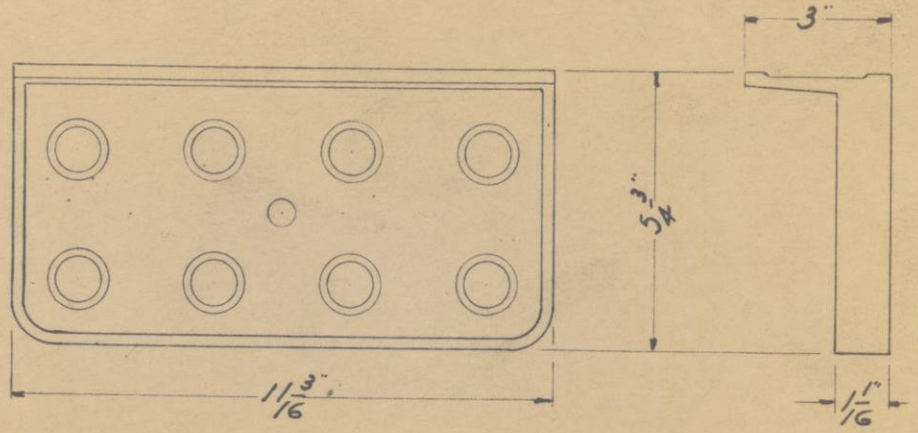

ROLLER TRAY FOR INK & ROLLER CABINET

PATTERN NO. 902

SEE B. P. NO. 473-C

THE HAMILTON MFG. CO.

DON'T REMOVE THIS LEAF FROM BOOK

ADDED CORRUGATIONS GRC 4-6-37

CORRUGATE THIS SURFACE

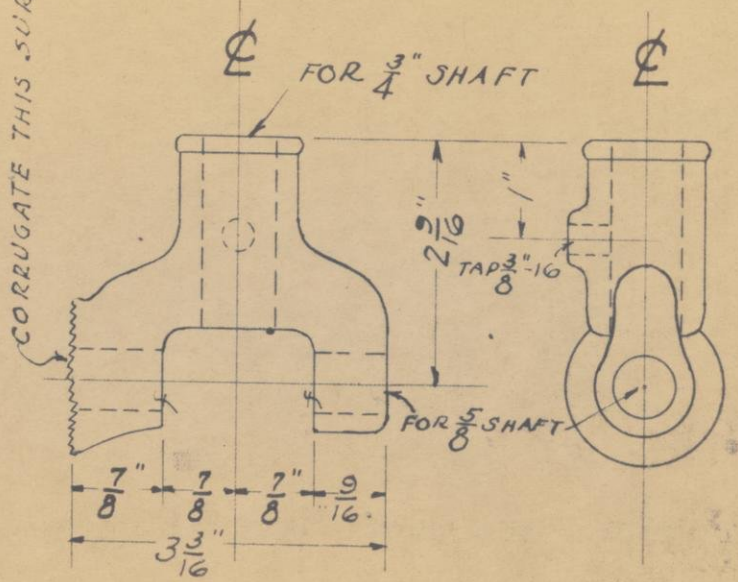

TOP PART OF NO 436 L SWIVEL HEAD

PATTERN NO. 903

SEE B. P. NO. NO DRAWING

THE HAMILTON MFG. CO.

DON'T REMOVE THIS LEAF FROM BOOK

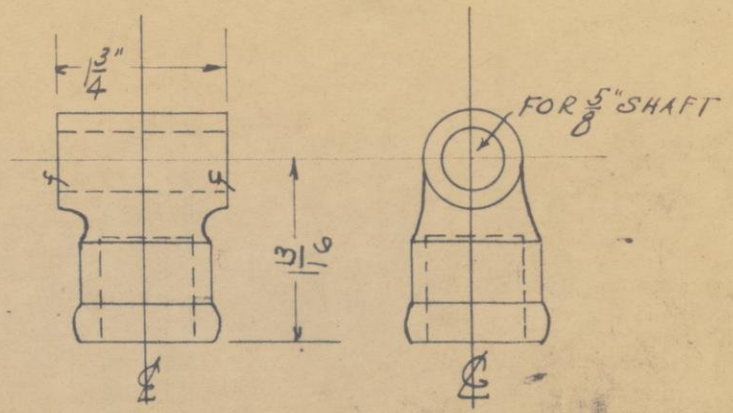

BOTTOM PART OF NO. 436 L SWIVEL HEAD

PATTERN NO. 904

SEE B. P. NO. NO DRAWING

THE HAMILTON MFG. CO.

DON'T REMOVE THIS LEAF FROM BOOK

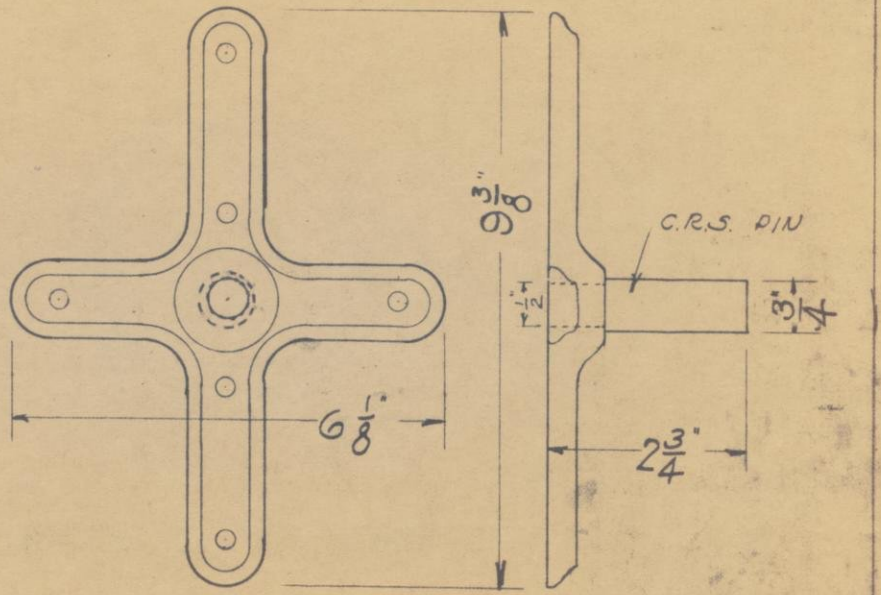

NO. 436-P CENTER PLATE

PATTERN NO. 905

SEE B. P. NO. 436-P.

REV 2-1-50

THE HAMILTON MFG. CO.

DON'T REMOVE THIS LEAF FROM BOOK

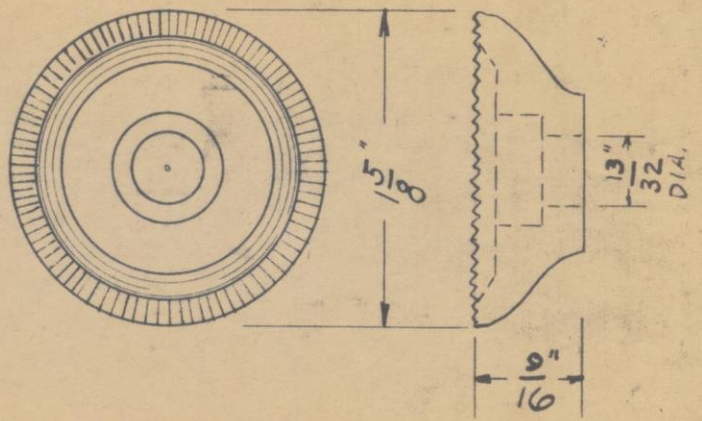

WASHER FOR SWIVEL HEAD

PATTERN NO. 906

SEE B. P. NO. NO DRAWING.

ADDED CORUGATIONS GRC 4-6-37

THE HAMILTON MFG. CO.

DON'T REMOVE THIS LEAF FROM BOOK

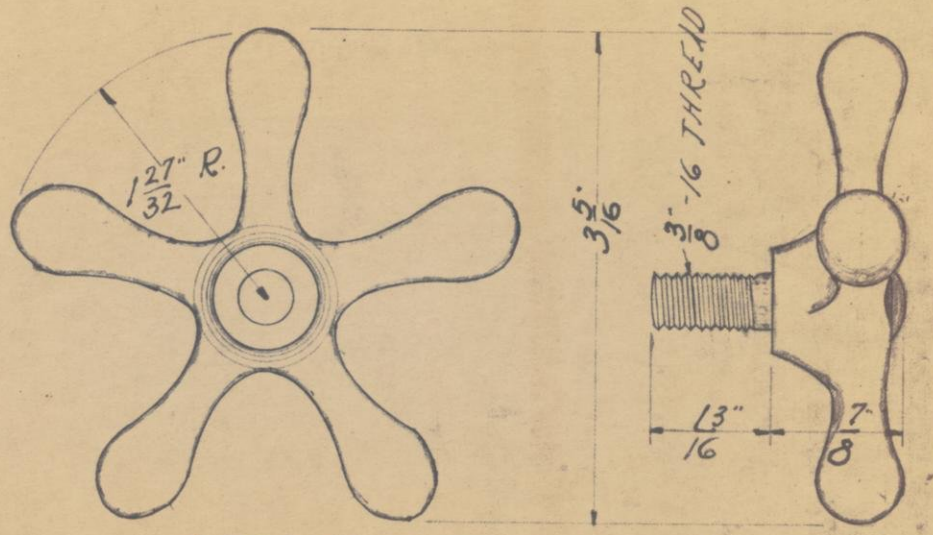

STAR HAND WHEEL

FOR NO. 436-L & 436-M HEADS.

MATERIAL-MALLEABLE IRON. PATTERN NO. 907

SEE B. P. NO. NO. DRAWING

3

THE HAMILTON MFG. CO.

DON'T REMOVE THIS LEAF FROM BOOK

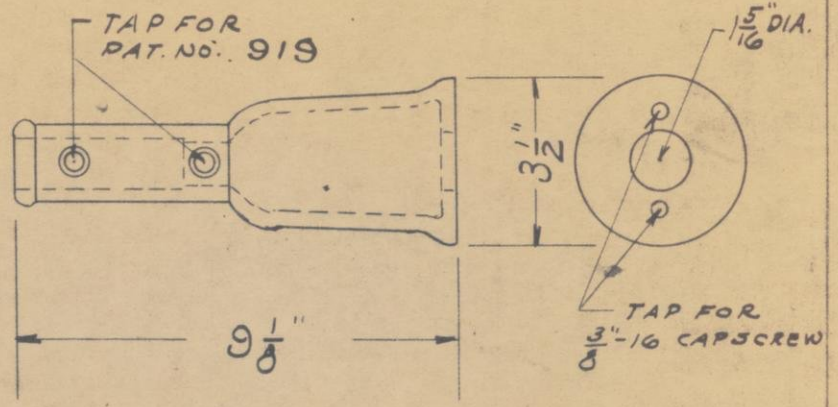

SOCKET FOR BASE NO. 436 H

PATTERN NO. 908.

SEE B. P. NO. NO DRAWING.

THE HAMILTON MFG. CO.

DON'T REMOVE THIS LEAF FROM BOOK

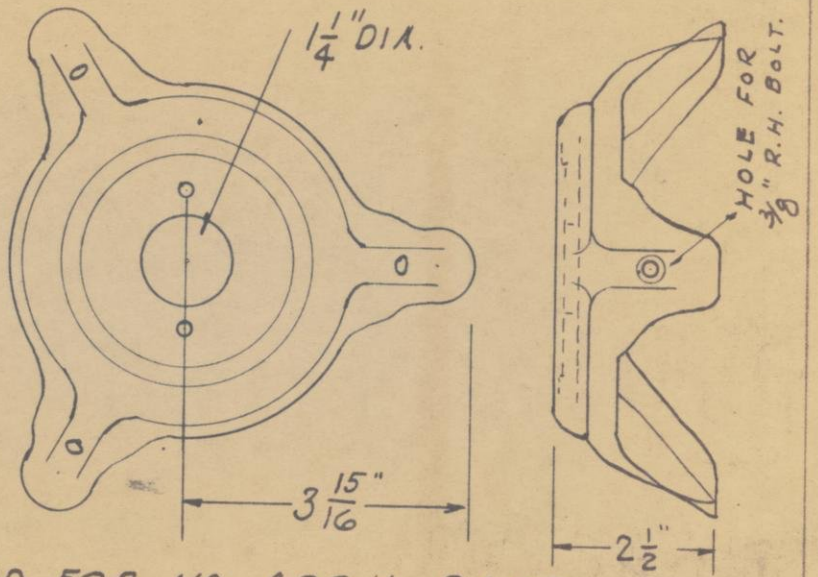

HEAD FOR NO. 436 H BASE

PATTERN NO. 909

SEE B. P. NO. NO DRAWING

3

THE HAMILTON MFG. CO.

DON'T REMOVE THIS LEAF FROM BOOK

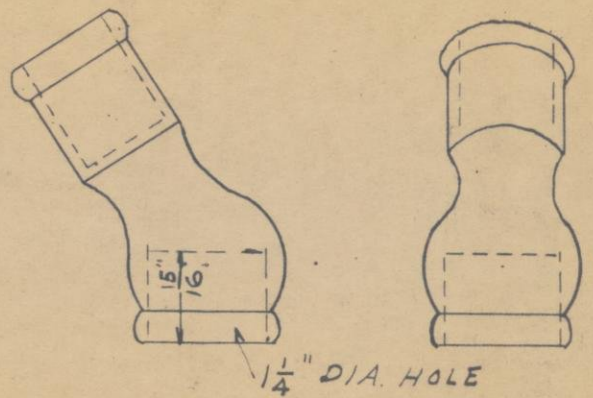

FOOT FOR NO. 436 H BASE.

PATTERN NO. 910

SEE B. P. NO. NO DRAWING

THE HAMILTON MFG. CO.

DON'T REMOVE THIS LEAF FROM BOOK

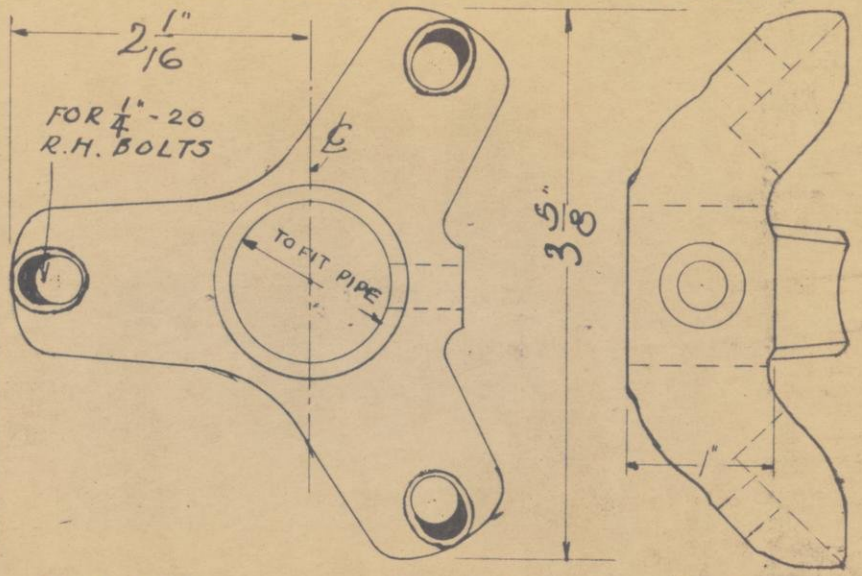

HEAD FOR NO 436-J BASE

PATTERN NO. 911

SEE B. P. NO. NO DRILLING.

THE HAMILTON MFG. CO.

DON'T REMOVE THIS LEAF FROM BOOK

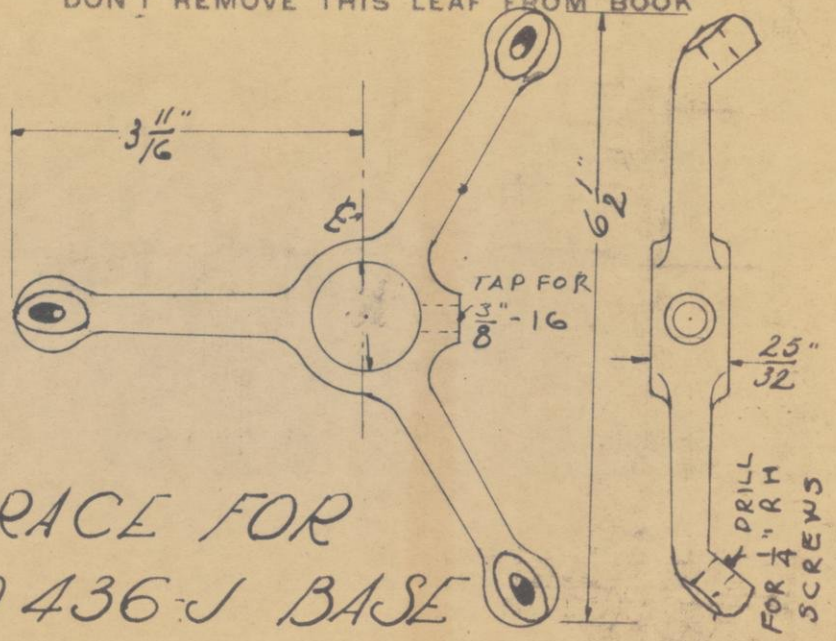

BRACE FOR NO 436 J BASE

PATTERN NO 912

SEE B. P. NO. NO DRAWING

THE HAMILTON MFG. CO.

DON'T REMOVE THIS LEAF FROM BOOK

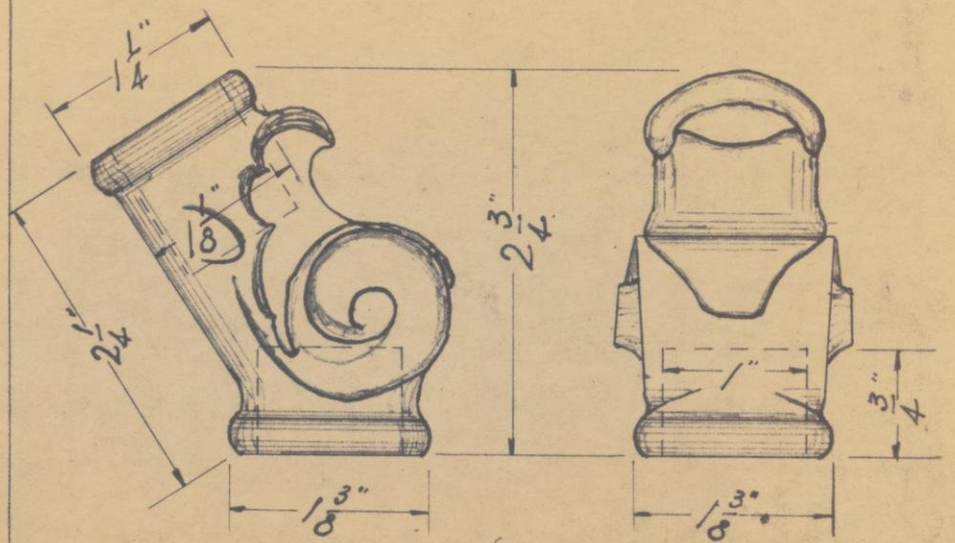

FOOT FOR NO. 436-J BASE

PATTERN NO. 913

SEE B. P. NO: NO DRAWING

THE HAMILTON MFG. CO.

DON'T REMOVE THIS LEAF FROM BOOK

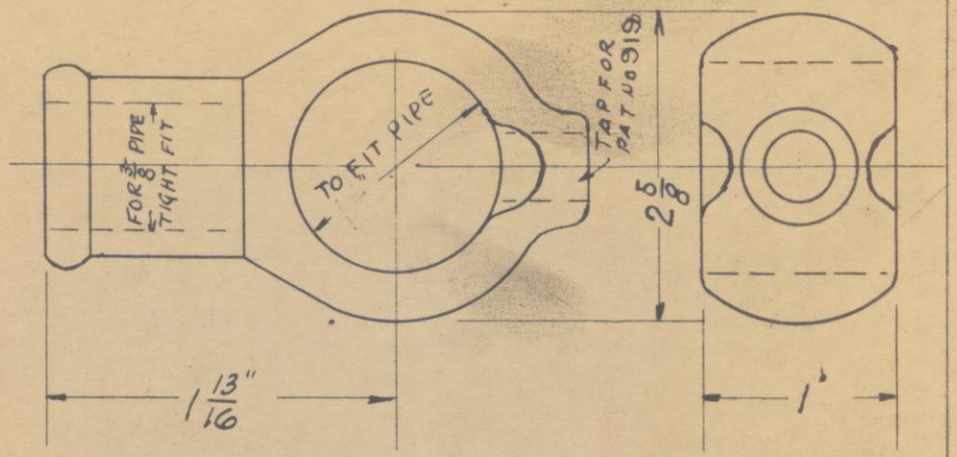

SOCKET FOR NO. 436 N EXT. ARM

PATTERN NO. 914

SEE B. P. NO. NO DRAWING

THE HAMILTON MFG. CO.

DON'T REMOVE THIS LEAF FROM BOOK

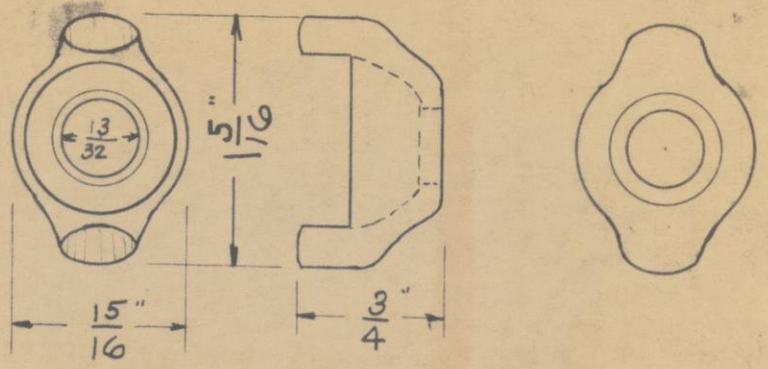

CLAMP FOR DRWG. STANDS.

PATTERN NO. 915

SEE B. P. NO. NO. DRAWING

THE HAMILTON MFG. CO.

DON'T REMOVE THIS LEAF FROM BOOK

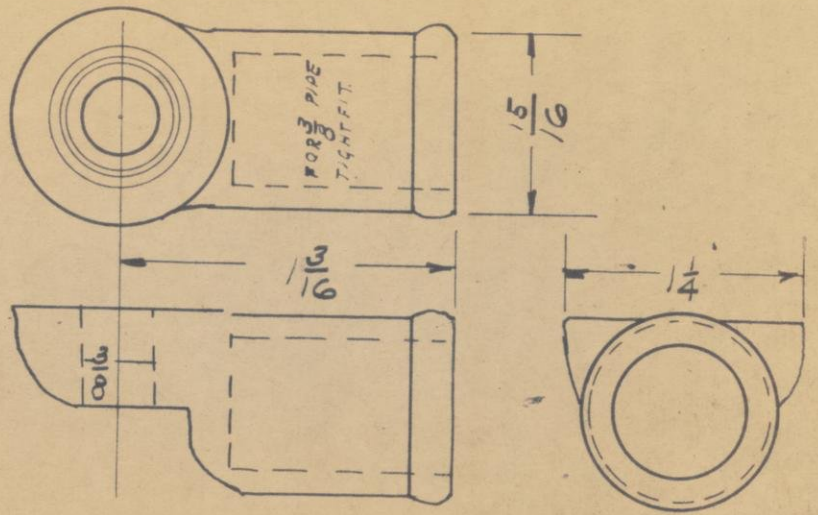

SOCKET FOR PIVOT PLATE FOR EXT. ARM NO. 496 M

PATTERN NO. 916

SEE B. P. NO. NO. DRAWING

THE HAMILTON MFG. CO.

DON'T REMOVE THIS LEAF FROM BOOK

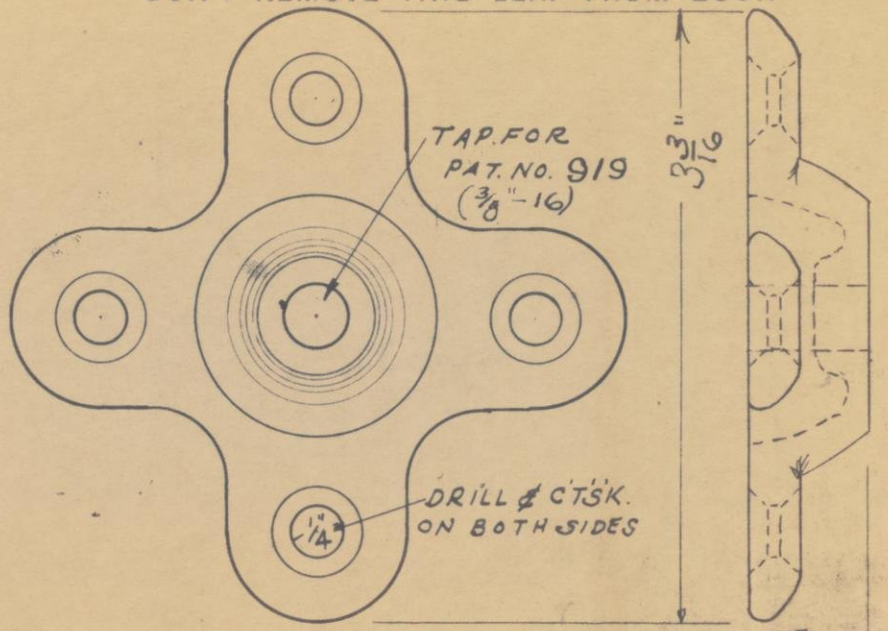

PIVOT PLATE FOR NO. 436 N EXT. ARM

PATTERN NO. 917

SEE B. P. NO. NO DRAWING

THE HAMILTON MFG. CO.

DON'T REMOVE THIS LEAF FROM BOOK

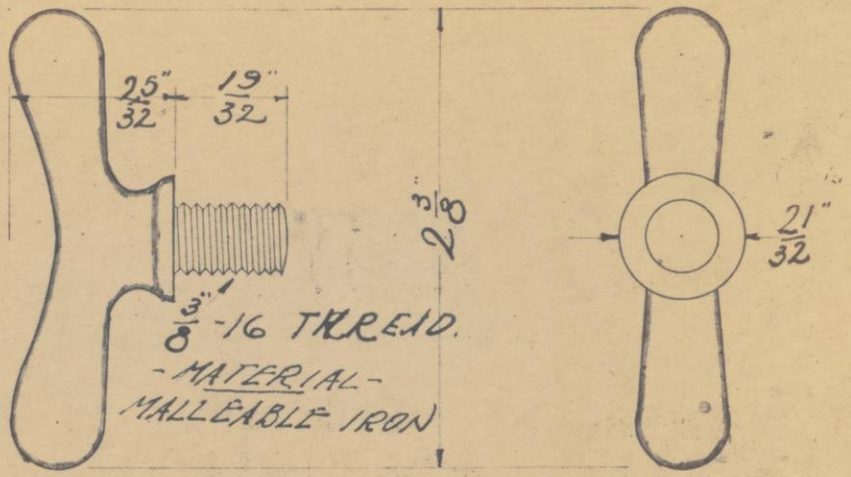

SMALL THUMB SCREW

FOR DRAWING STANDS

PATTERN NO. 918

SEE B. P. NO. NO DRAWING.

3

THE HAMILTON MFG. CO.

DON'T REMOVE THIS LEAF FROM BOOK

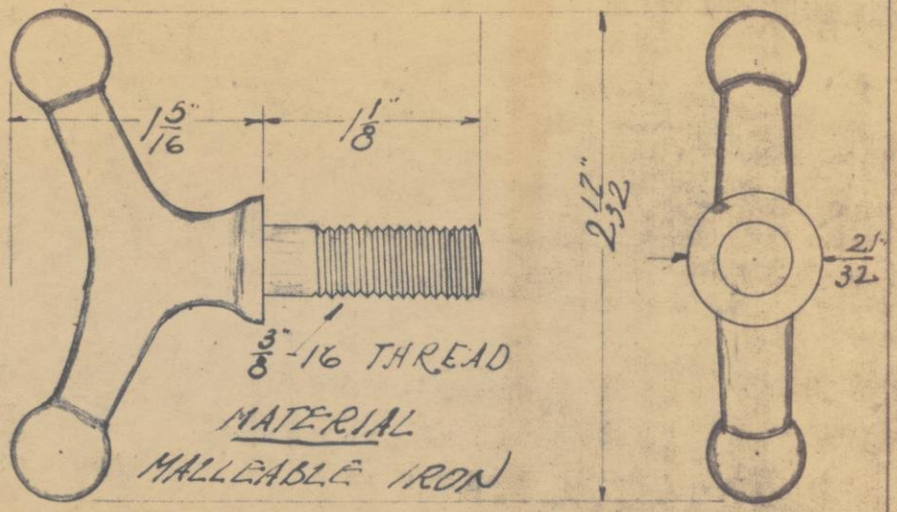

MATERIAL
MALLEABLE IRON

MEDIUM THUMB SCREW
FOR DRAWING STANDS.

PATTERN NO. 919

SEE B. P. NO. NO DRAWING.

8-to a Gate

THE HAMILTON MFG. CO.

DON'T REMOVE THIS LEAF FROM BOOK

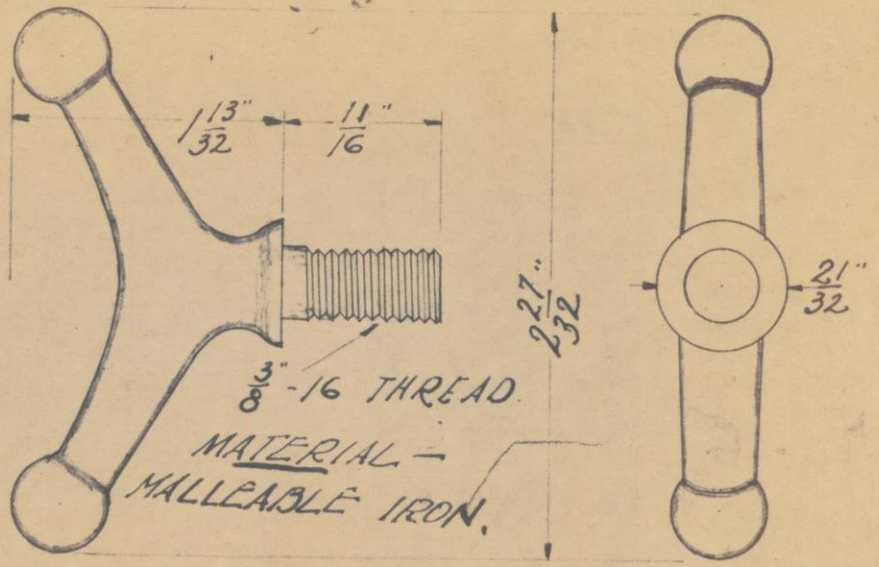

LARGE THUMB SCREW

FOR BRACKET CLAMP NO. 436 K

PATTERN NO. 920

SEE B. P. NO. NO DRAWING.

THE HAMILTON MFG. CO.

DON'T REMOVE THIS LEAF FROM BOOK

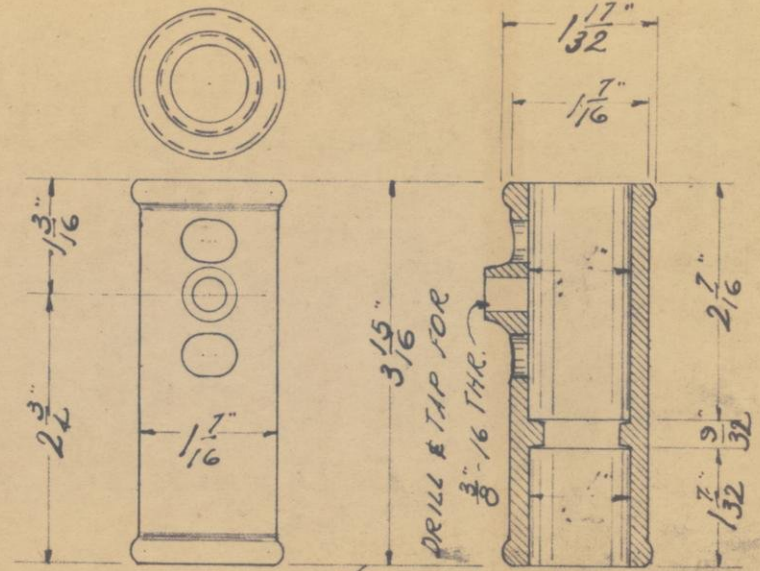

SOCKET FOR NO. 436-N EXT. ARM

PATTERN NO. 921

SEE B. P. NO. NO DRAWING.

THE HAMILTON MFG. CO.

DON'T REMOVE THIS LEAF FROM BOOK

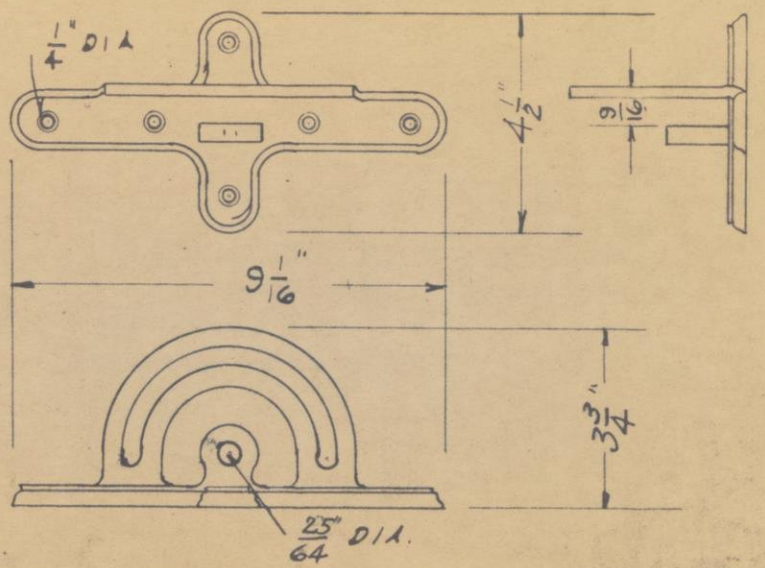

NO. 436 M - SECTOR HEAD

PATTERN NO. 922

SEE B. P. NO. NO DRAWING

11

THE HAMILTON MFG. CO.

DON'T REMOVE THIS LEAF FROM BOOK

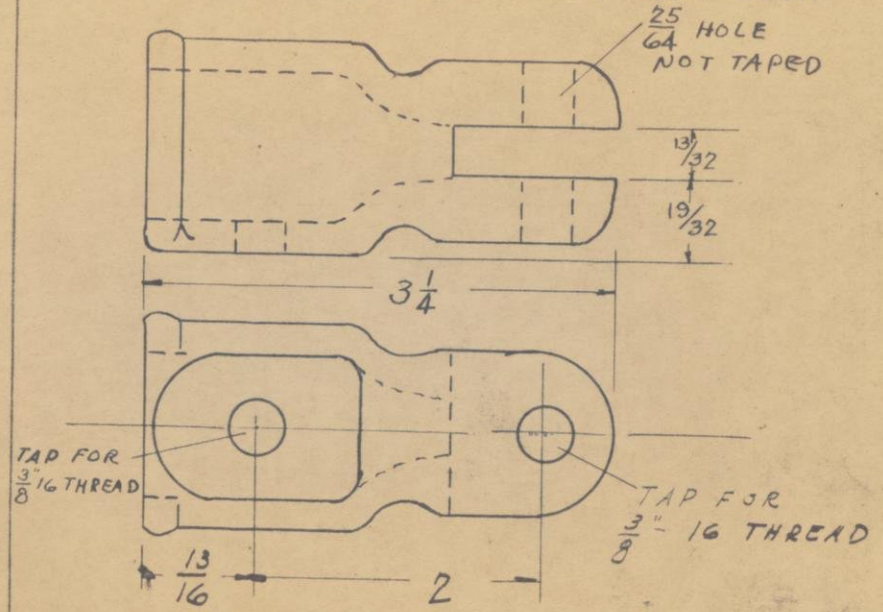

BEARING FOR NO. 436 M SECTOR HEAD

PATTERN NO. 923

SEE B. P. NO. NO DRAWING

THE HAMILTON MFG. CO.

DON'T REMOVE THIS LEAF FROM BOOK

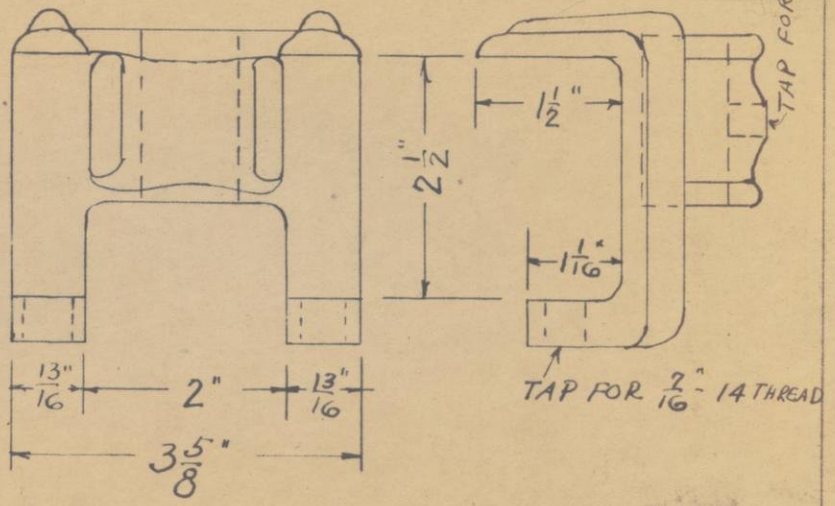

CLAMP FOR NO. 434 BOARD BRACKET

PATTERN NO. 924

SEE B. P. NO. NO. DRAWING

THE HAMILTON MFG. CO.

DON'T REMOVE THIS LEAF FROM BOOK

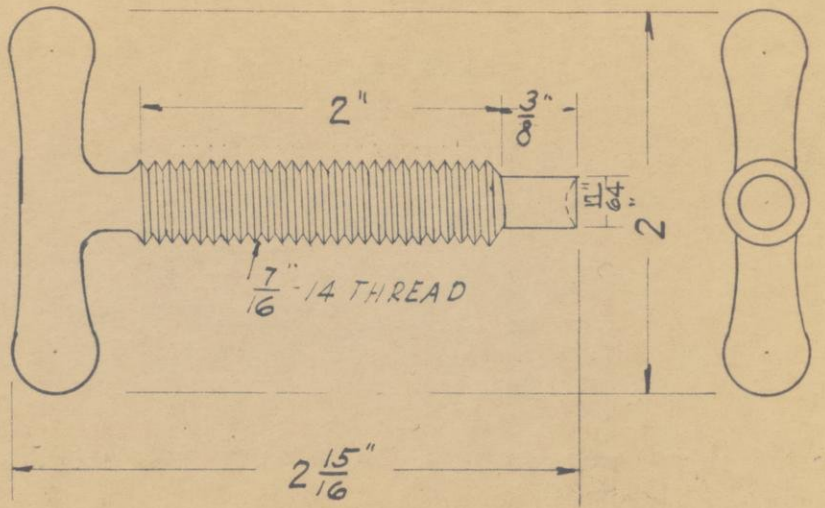

CLAMP SCREW FOR NO. 434 BRACKET

MATERIAL - MALLEABLE IRON.

PATTERN NO 925.

SEE B. P. NO. NO DRAWING

THE HAMILTON MFG. CO.

DON'T REMOVE THIS LEAF FROM BOOK

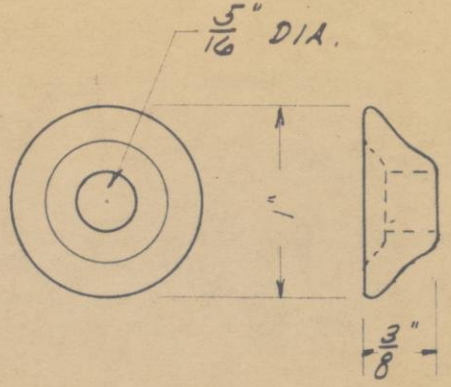

TIP FOR CLAMP SCREW

PATTERN NO. 926

SEE B. P. NO. NO. DRAWING

THE HAMILTON MFG. CO.

DON'T REMOVE THIS LEAF FROM BOOK

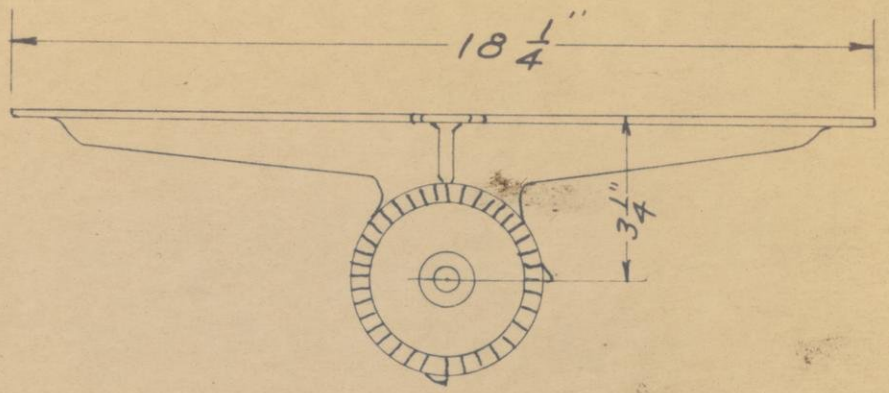

TILTING BRACKET
FOR ARTISTS TABLE

PATTERN NO. 930

SEE B. P. NO. 207-208 BW

THE HAMILTON MFG. CO.

DON'T REMOVE THIS LEAF FROM BOOK

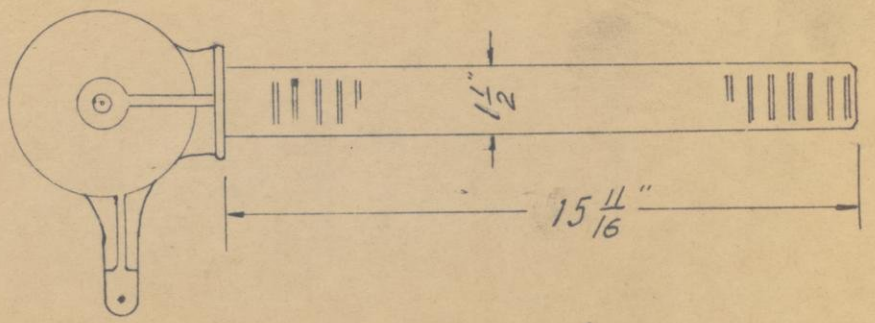

RAISING POST

PATTERN NO. 931

SEE B. P. NO. 207-208BW

THE HAMILTON MFG. CO.

DON'T REMOVE THIS LEAF FROM BOOK

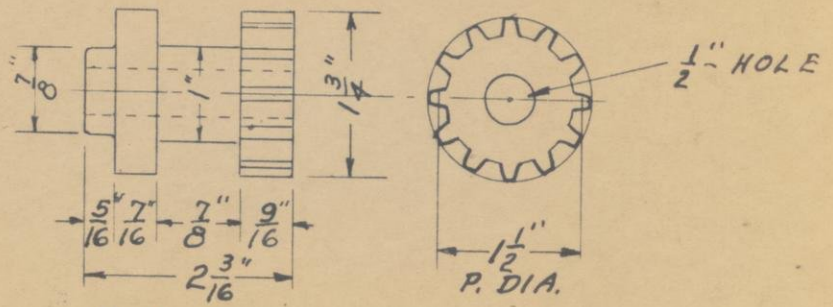

NO. 8 PITCH 12-TEETH
PART FOR ARTISTS TABLE

PATTERN NO. 932

SEE B. P. NO. 207-208AW

THE HAMILTON MFG. CO.

DON'T REMOVE THIS LEAF FROM BOOK

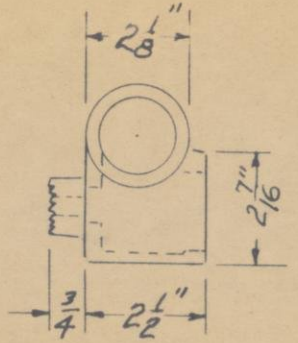

PART FOR ARTISTS TABLE

PATTERN NO. 933

SEE B. P. NO 207-208 AW

THE HAMILTON MFG. CO.

DON'T REMOVE THIS LEAF FROM BOOK

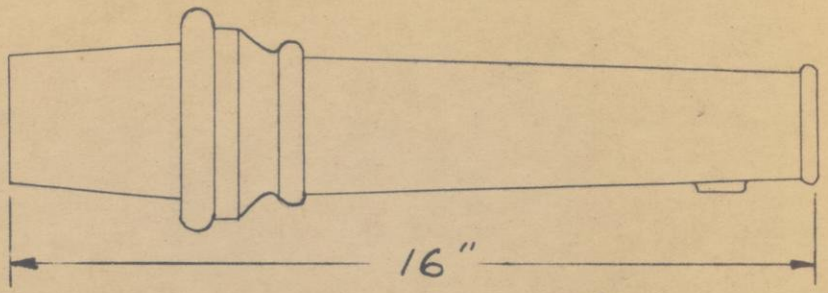

PART FOR ARTISTS TABLE

PATTERN NO. 934

SEE B. P. NO. 207-208AW

THE HAMILTON MFG. CO.

DON'T REMOVE THIS LEAF FROM BOOK

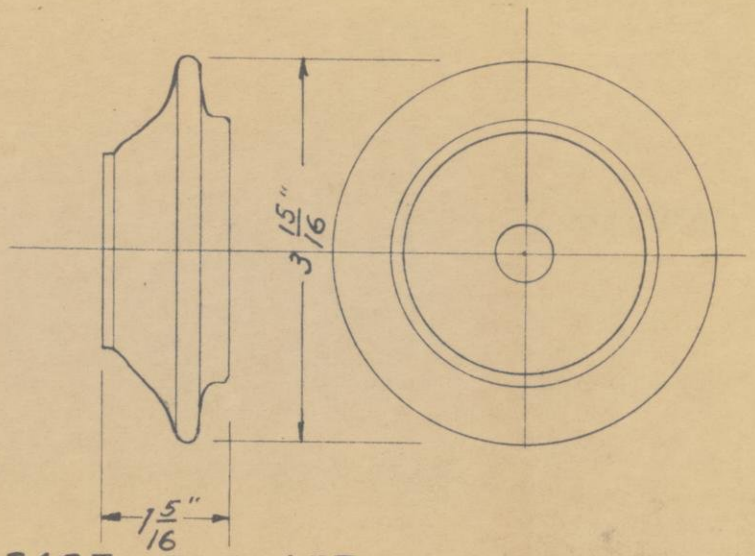

PART FOR ARTISTS TABLE

PATTERN NO. 935

SEE B. P. NO. 207-208 A W

THE HAMILTON MFG. CO.

DON'T REMOVE THIS LEAF FROM BOOK

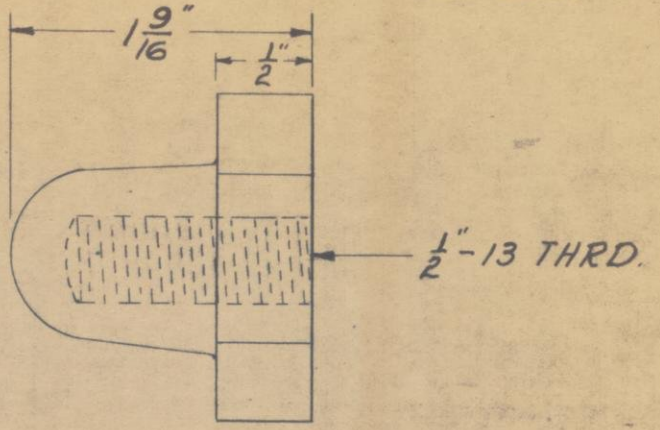

NUT FOR ARTISTS TABLE

PATTERN NO. 936

SEE B. P. NO. 207-208AW

THE HAMILTON MFG. CO.

DON'T REMOVE THIS LEAF FROM BOOK

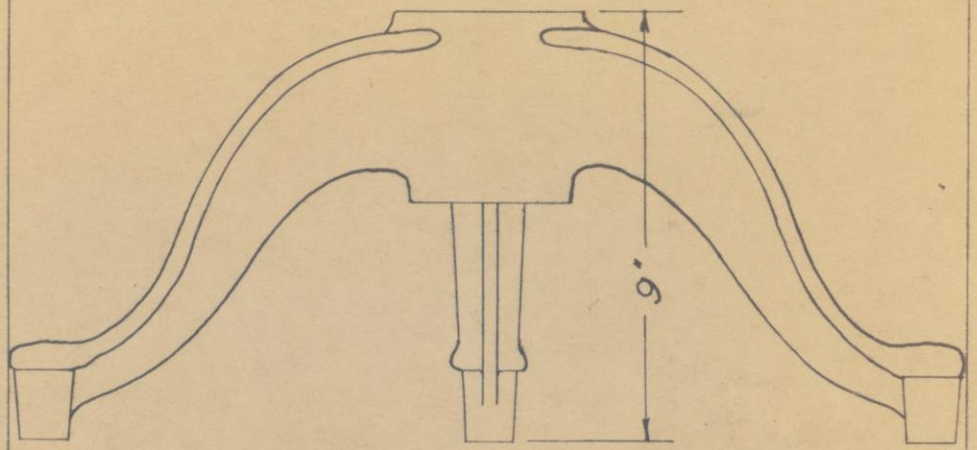

BASE FOR ARTISTS TABLE

PATTERN NO. 937

SEE B. P. NO. 207-208 CW

THE HAMILTON MFG. CO.

DON'T REMOVE THIS LEAF FROM BOOK

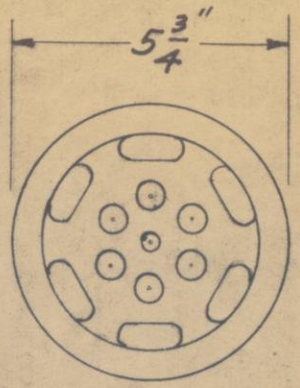

HAND WHEEL FOR ARTISTS TABLE

PATTERN NO. 938

SEE B. P. NO. 207-208AW

THE HAMILTON MFG. CO.

DON'T REMOVE THIS LEAF FROM BOOK

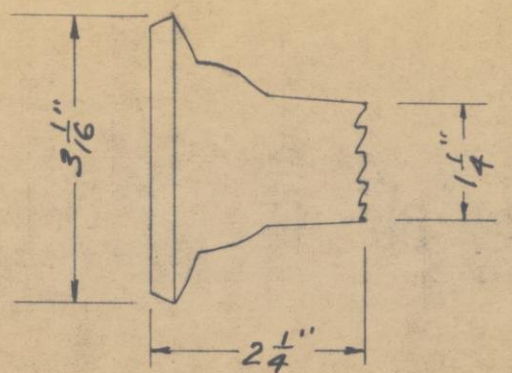

PART FOR ARTISTS TABLE
ON HAND WHEEL

PATTERN NO. 939

SEE B. P. NO 207-208AW

THE HAMILTON MFG. CO.

DON'T REMOVE THIS LEAF FROM BOOK

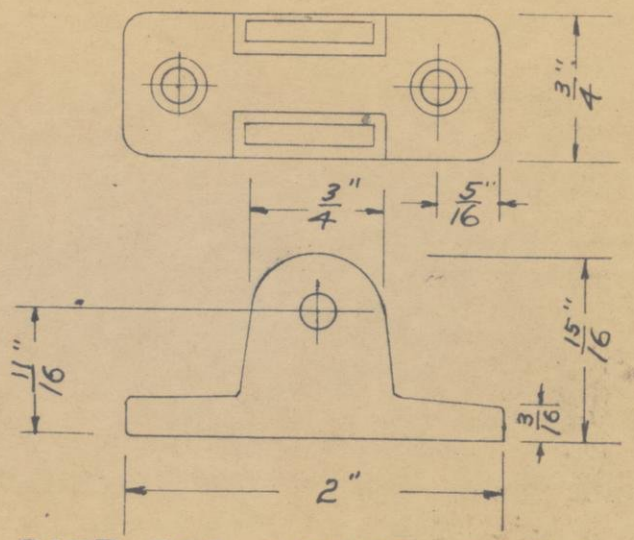

PART FOR ARTIST TABLE

PATTERN NO. 940

SEE B. P. NO. 207-208DW

THE HAMILTON MFG. CO.

DON'T REMOVE THIS LEAF FROM BOOK

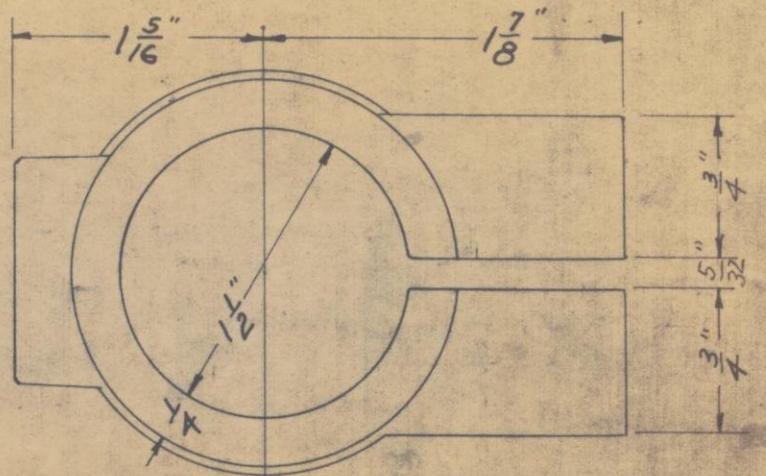

PART OF EXTENSION ARM FOR ARTISTS TABLE

PATTERN NO. 941

SEE B. P. NO. 207-208 DW

THE HAMILTON MFG. CO.

DON'T REMOVE THIS LEAF FROM BOOK

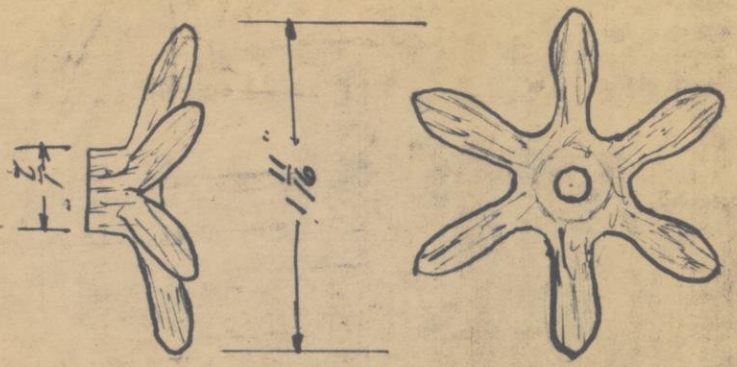

PATTERN NO. 942

SEE B. P. NO. 21183

THE HAMILTON MFG. CO.

DON'T REMOVE THIS LEAF FROM BOOK

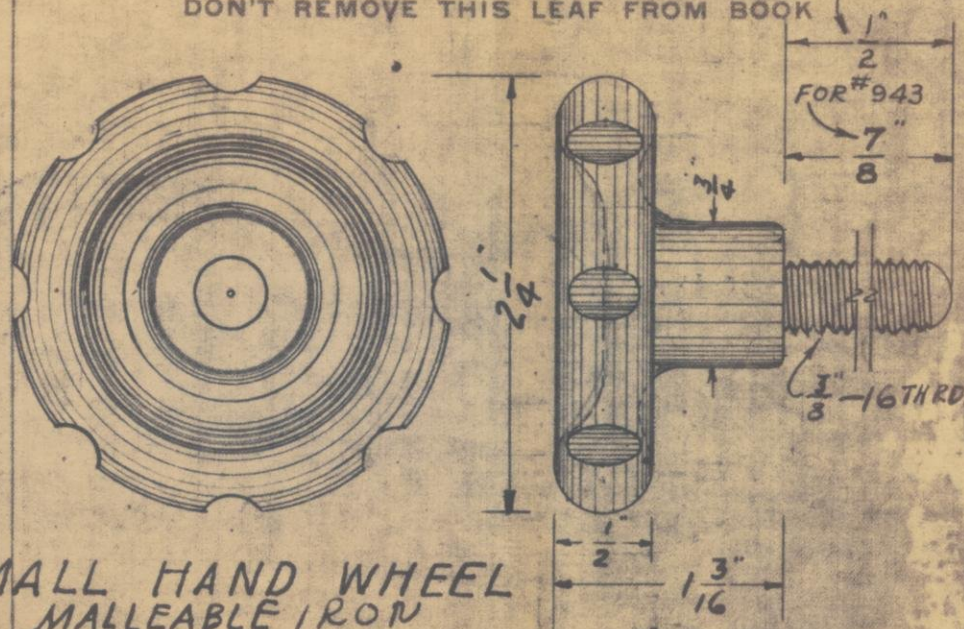

SMALL HAND WHEEL

MALLEABLE IRON

PATTERN NO. 943 TO HAVE SCREW 7/8" LONG

" NO. 943-A " " " 1/2 "

PATTERN NO. 943 & 943-A

SEE B. P. NO. 474

THE HAMILTON MFG. CO.

DON'T REMOVE THIS LEAF FROM BOOK

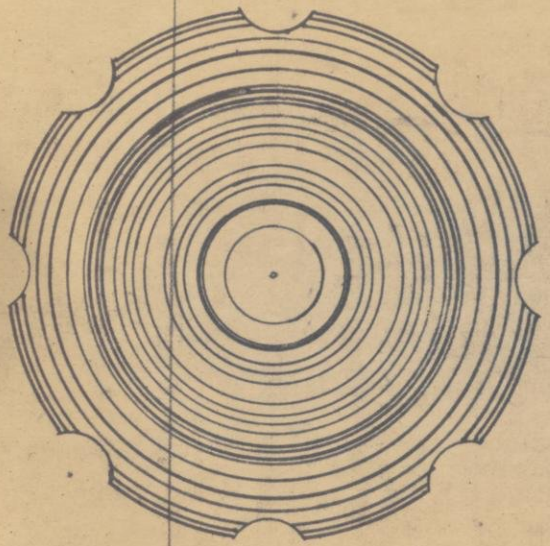

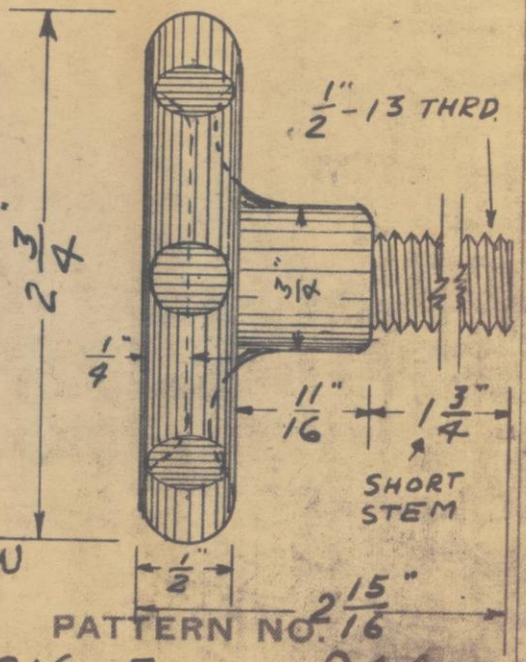

MALLEABLE IRON

PATTERN NO. 944-

SEE B. P. NO. 211-216-F.

THE HAMILTON MFG. CO.

DON'T REMOVE THIS LEAF FROM BOOK

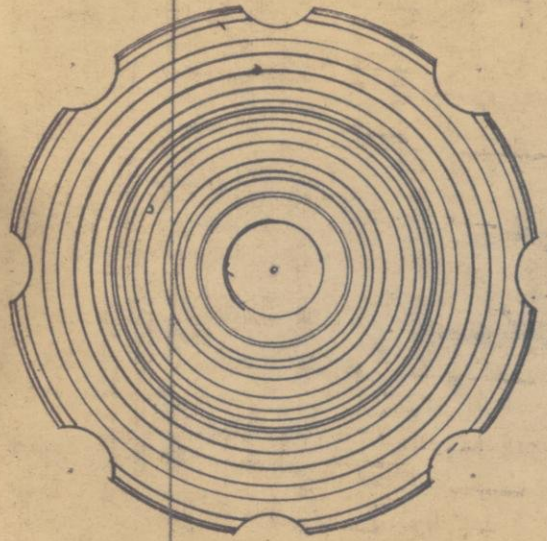

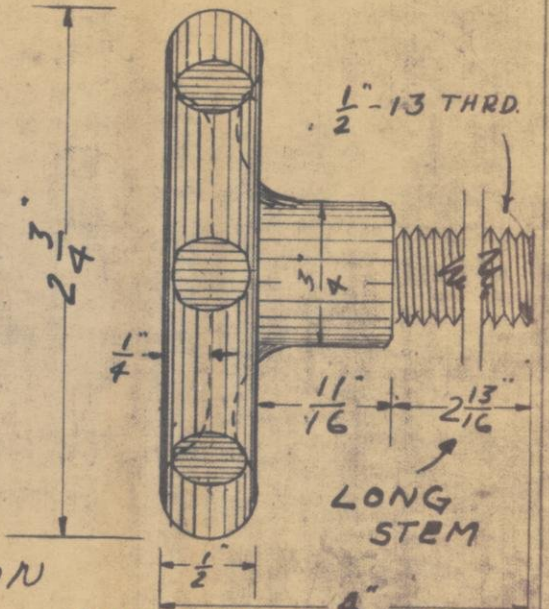

MALLEABLE IRON

PATTERN NO. 945

SEE B. P. NO. 211-216-H

THE HAMILTON MFG. CO.

DON'T REMOVE THIS LEAF FROM BOOK

TO FIT 1½"-DIA. 14-G. TUBING

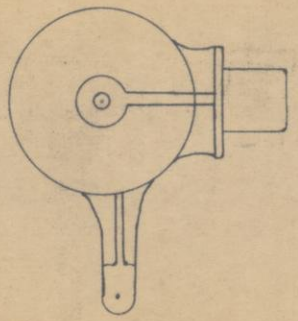

TILTING HEAD

PATTERN NO. 948

SEE B. P. NO. 209 & 210-A-W

THE HAMILTON MFG. CO.

DON'T REMOVE THIS LEAF FROM BOOK

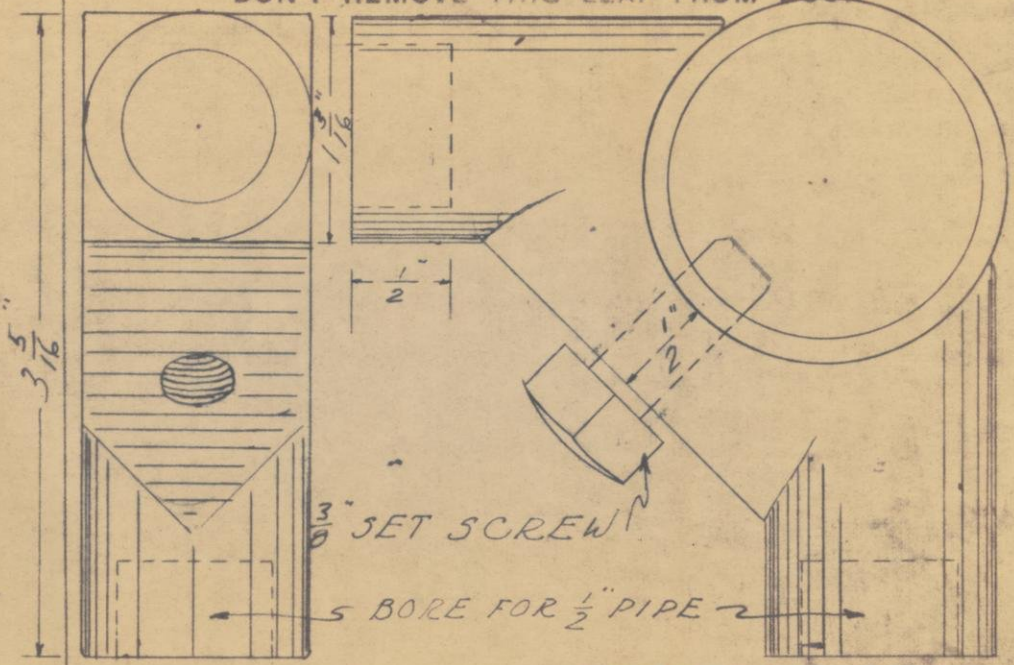

PATTERN NO. 949

SEE B. P. NO. 15733-B-5.

BRACKET FOR HANDLES FOR NO. 15733-A & NO. 15731-A MAKE-UP TRUCKS.

THE HAMILTON MFG. CO.

DON'T REMOVE THIS LEAF FROM BOOK

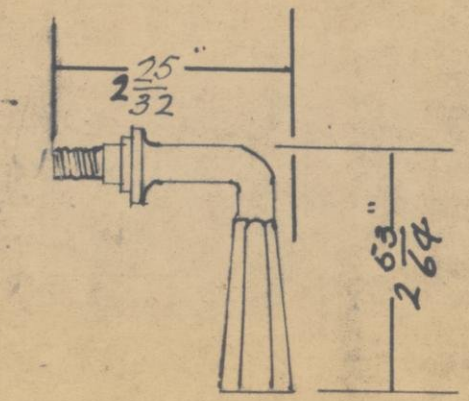

PATTERN NO. 951

SEE B. P. NO. 477-C

THE HAMILTON MFG. CO.

DON'T REMOVE THIS LEAF FROM BOOK

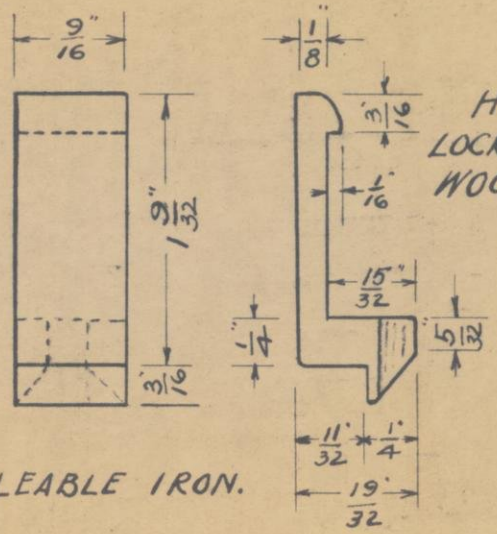

HOOK FOR LOCKING DEVICE FOR WOOD B.P. UNITS.

MALLEABLE IRON.

PATTERN NO. 956.

SEE B. P. NO. 44 L.O.W.

Adm. 12-19-27.

NO WORKING DRAWING.

13

THE HAMILTON MFG. CO.

DON'T REMOVE THIS LEAF FROM BOOK

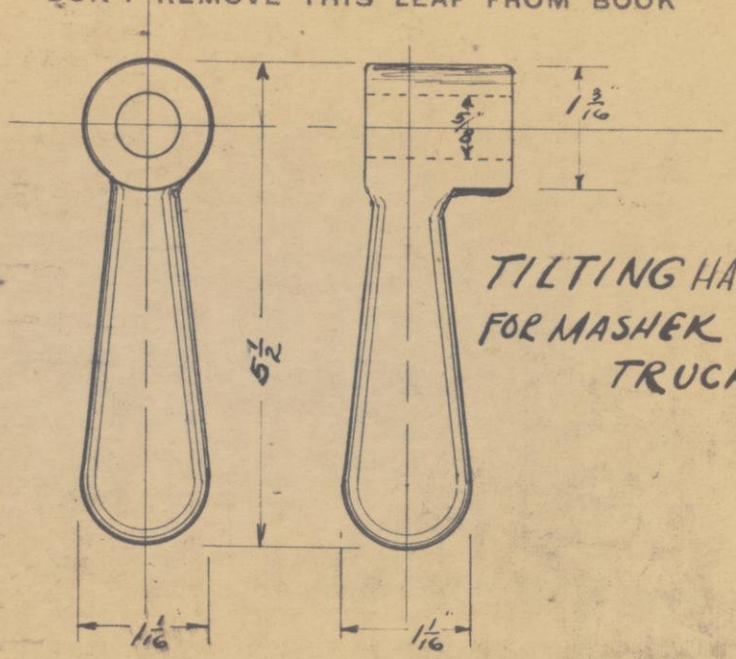

TILTING HANDLE FOR MASHER TRUCKS.

PATTERN NO. 960

SEE B. P. NO. 483-C.

THE HAMILTON MFG. CO.

DON'T REMOVE THIS LEAF FROM BOOK

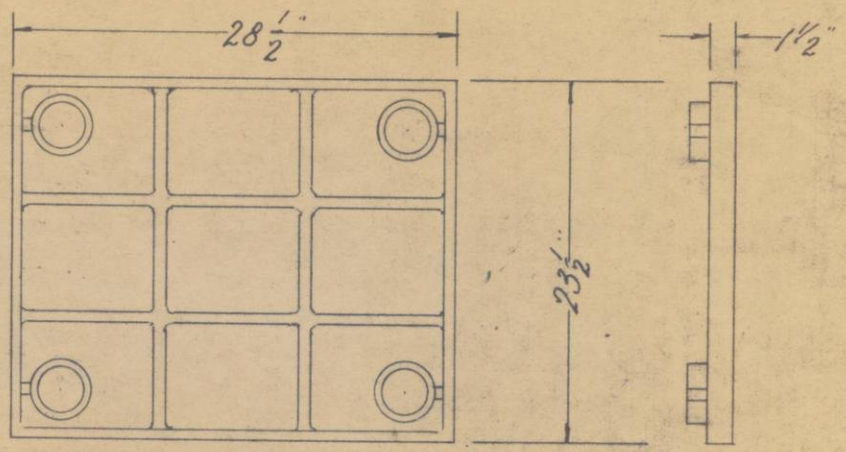

IRON TOP FOR PROPOSED No. 15731-A MAKE-UP TRUCK

PATTERN NO. 962

SEE B. P. NO. 0011914 15731-A

S.K. 2-9-28

THE HAMILTON MFG. CO.

DON'T REMOVE THIS LEAF FROM BOOK

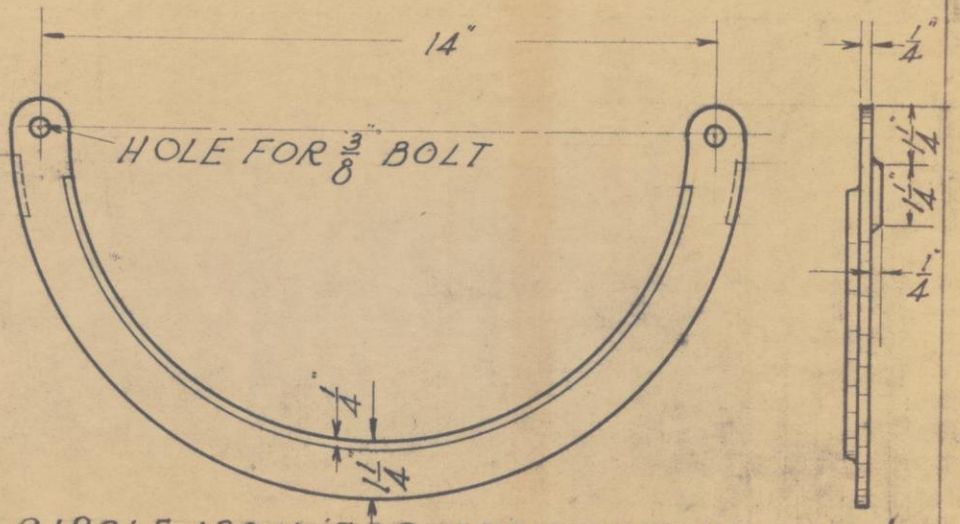

CIRCLE IRON FOR IDEAL, CHAMPION & PERFECTION-MONROE DRAWING TABLES.

PATTERN NO. 965

SEE B. P. NO. ~~486 C~~ 10-156BW

NO DRAWING

THE HAMILTON MFG. CO.

DON'T REMOVE THIS LEAF FROM BOOK

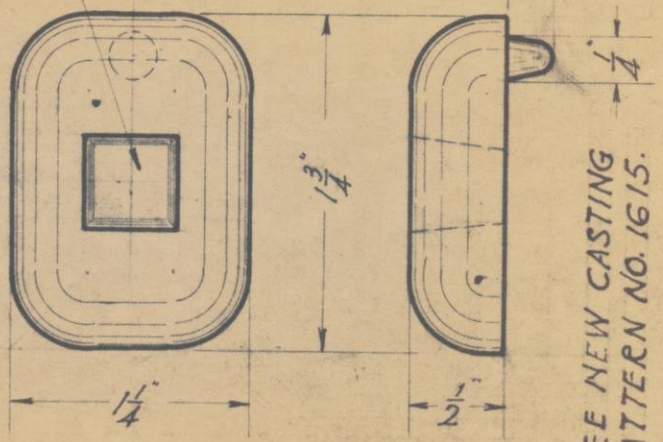

CASTING FOR TAPERED HEAD ROD
ON IDEAL DRAWING TABLES

SEE NEW CASTING
PATTERN NO. 1615.

PATTERN NO. 966

SEE B. P. NO. 487 C.

NO DRAWING

THE HAMILTON MFG. CO.

DON'T REMOVE THIS LEAF FROM BOOK

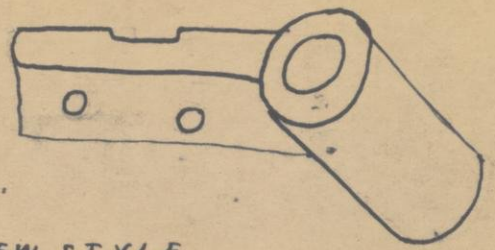

NEW STYLE

SUPPORT FOR MASHEK TRUCK

PATTERN NO. 967 R.+L.

SEE B. P. NO. 488-C

THE HAMILTON MFG. CO.

DON'T REMOVE THIS LEAF FROM BOOK

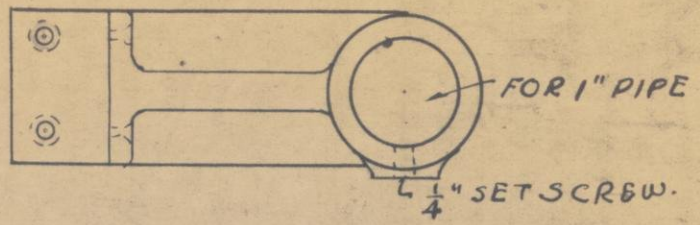

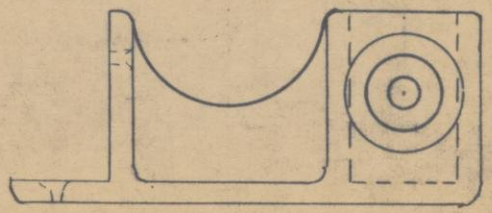

BRACKET FOR DRAWING TABLE

PATTERN NO. 968

SEE B. P. NO. 21871

THE HAMILTON MFG. CO.

DON'T REMOVE THIS LEAF FROM BOOK

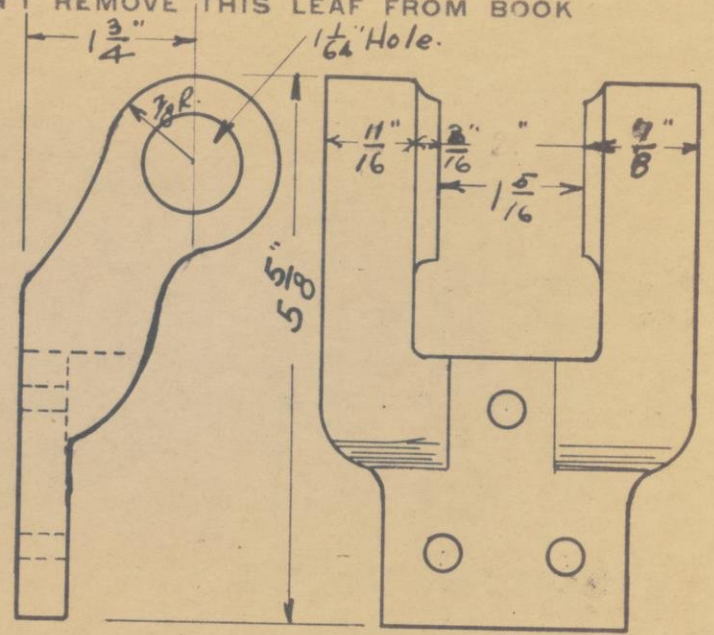

HAND WHEEL SUPPORT FOR SPEC. MASHEK TRUCK

PER B.P. No 0011738. PATTERN NO. 969.

SEE B. P. NO. 490-C

A.H.M. 4 26-28.

THE HAMILTON MFG. CO.

DON'T REMOVE THIS LEAF FROM BOOK

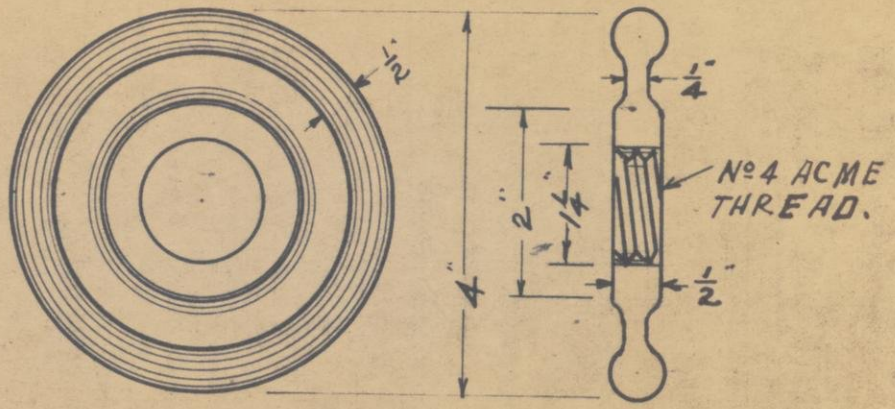

HAND WHEEL FOR SPECIAL MASHEK TRUCK PER B.P. NO. 0011738.

PATTERN NO. 970.

SEE B. P. NO. 491-C

A.H.M. 4-26-28.

THE HAMILTON MFG. CO.

DON'T REMOVE THIS LEAF FROM BOOK

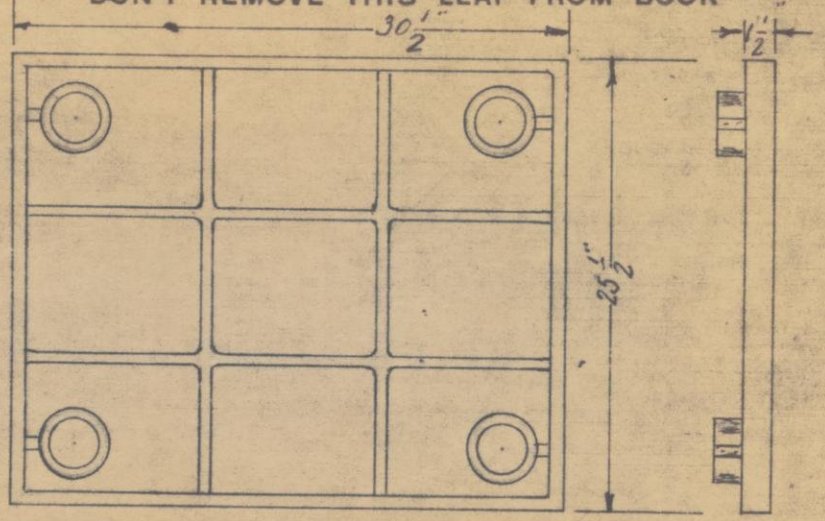

IRON TOP

PATTERN NO. 976

SEE B. P. NO. 15733-A

THE HAMILTON MFG. CO.

DON'T REMOVE THIS LEAF FROM BOOK

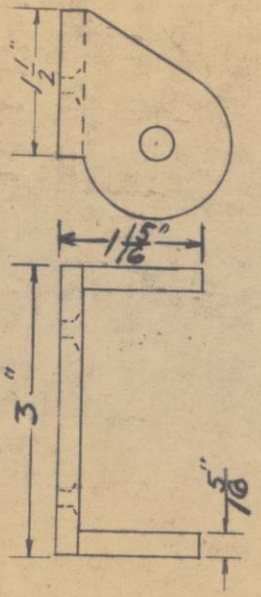

BRACKET FOR SWINGING TRAY ARM

PATTERN NO. 981

SEE B. P. NO. 211 TO 216-BR

THE HAMILTON MFG. CO.

DON'T REMOVE THIS LEAF FROM BOOK

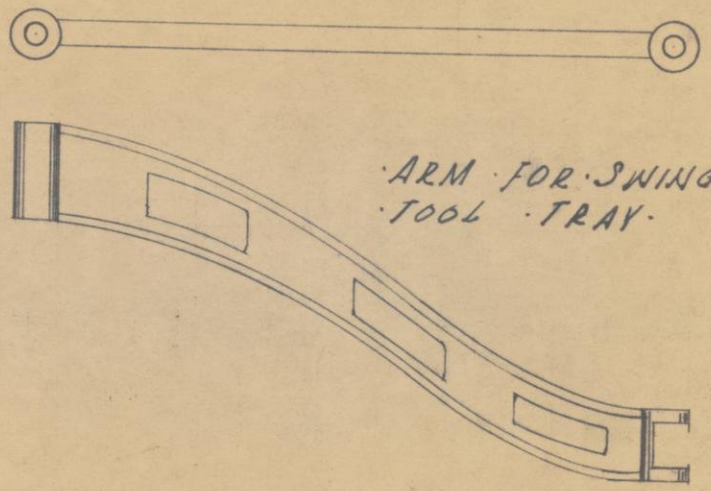

ARM FOR SWINGING TOOL TRAY

PATTERN NO. 982

SEE B. P. NO. 0012366

THE HAMILTON MFG. CO.

DON'T REMOVE THIS LEAF FROM BOOK

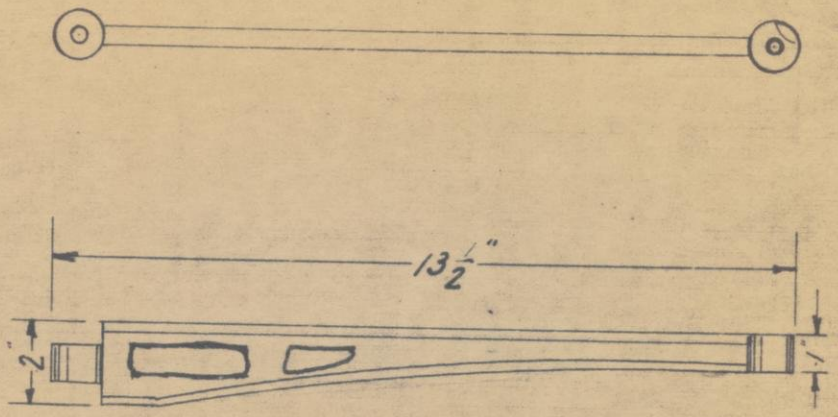

ARM FOR SWINGING TOOL TRAY

PATTERN NO. 983

SEE B. P. NO. 0012366

THE HAMILTON MFG. CO.

DON'T REMOVE THIS LEAF FROM BOOK

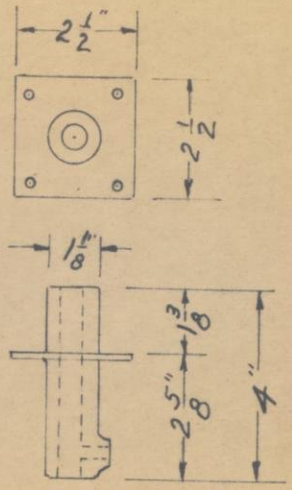

BRACKET FOR DRAWING BOARD
RAISING DEVICE.

PATTERN NO. 984

SEE B. P. NO. 1962-Z

THE HAMILTON MFG. CO.

DON'T REMOVE THIS LEAF FROM BOOK

1¼ R.

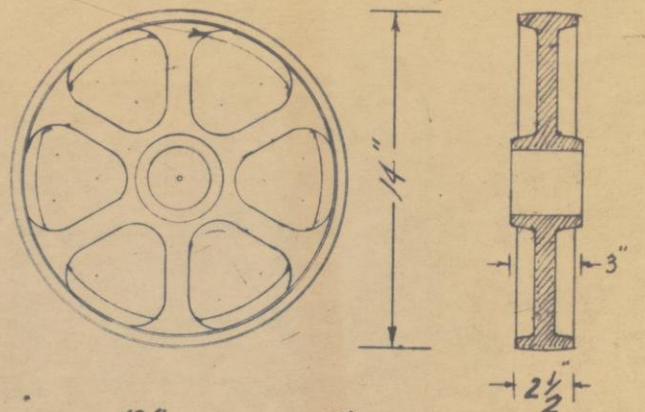

DRILLED 2 13/16" DIA. FOR #18275 HYATT BEARING.

~ TRUCK WHEEL ~

(CAST IRON.)

PATTERN NO. 985

SEE B. P. NO. 0012411-A.

THE HAMILTON MFG. CO.

DON'T REMOVE THIS LEAF FROM BOOK

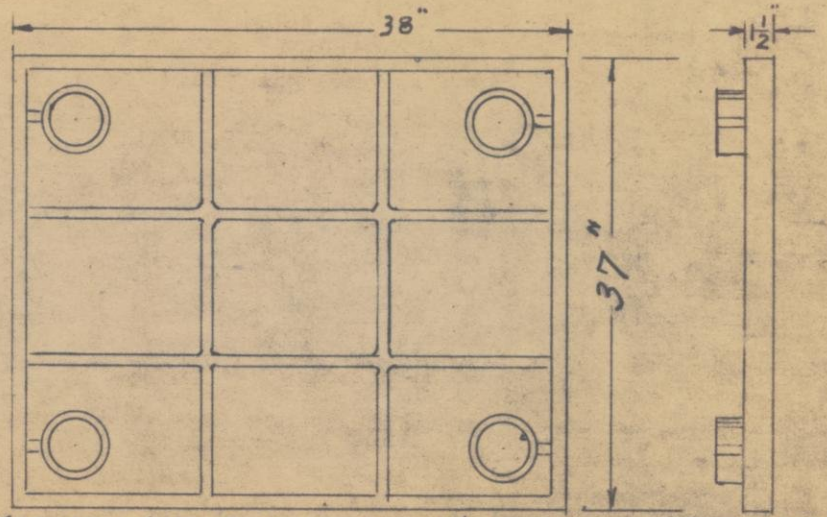

THIS IRON TOP WILL GO ON A 15733-A-S TRUCK.
IT IS THE SAME AS REGULAR EXCEPT WITH
THE SPACES BETWEEN RIBS INCREASED TO MAKE 38"x37".

PATTERN NO. 988.

SEE B. P. NO. NO DRAWING MADE.

-12

THE HAMILTON MFG. CO.

DON'T REMOVE THIS LEAF FROM BOOK

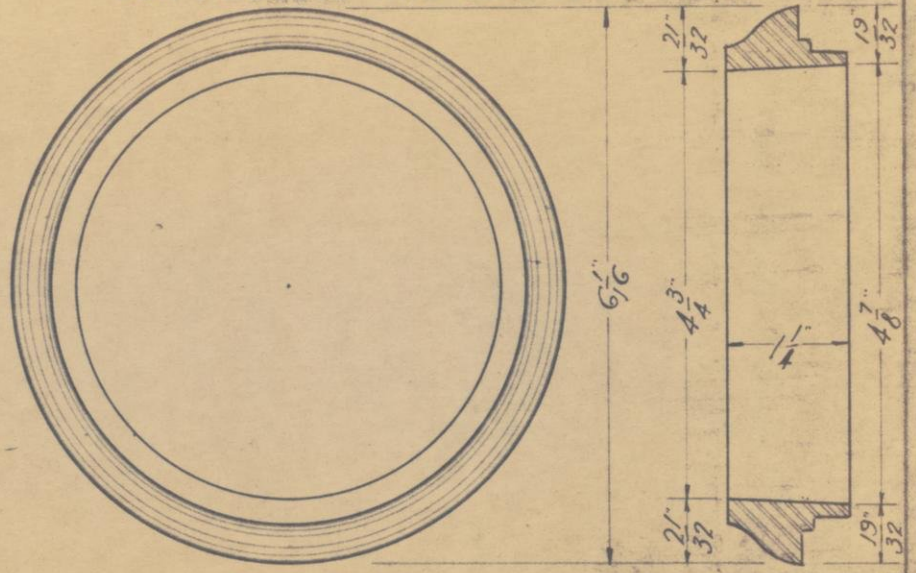

RING FOR VULCANIZING BENCH

PER B.P. NO. 0012349-A

PATTERN NO. 994

SEE B. P. NO. 494-C

THE HAMILTON MFG. CO.

DON'T REMOVE THIS LEAF FROM BOOK

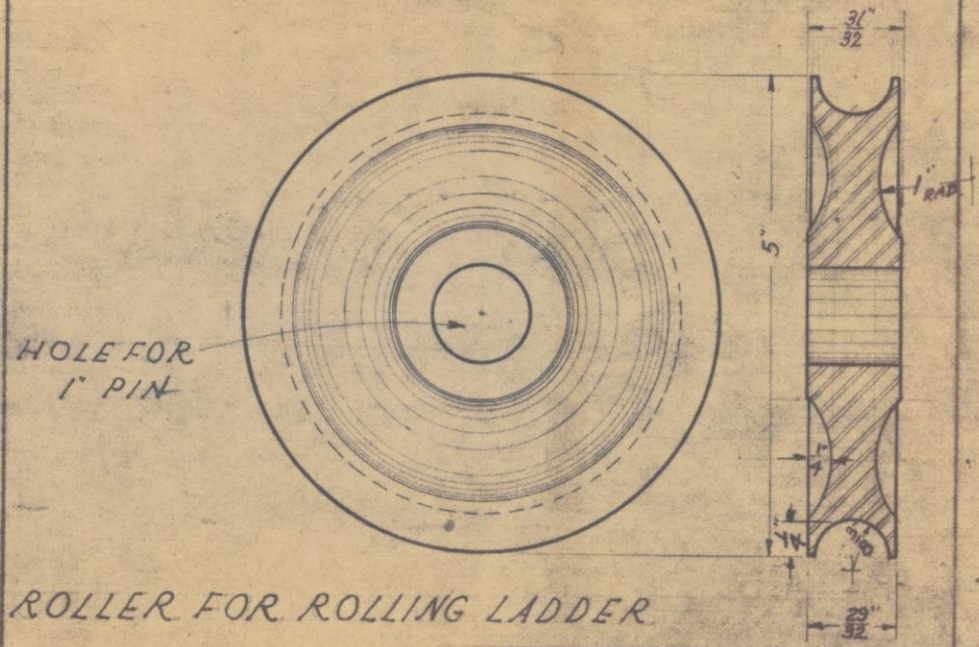

ROLLER FOR ROLLING LADDER

PATTERN NO. 998

SEE B. P. NO. 1969-W

THE HAMILTON MFG. CO.

DON'T REMOVE THIS LEAF FROM BOOK

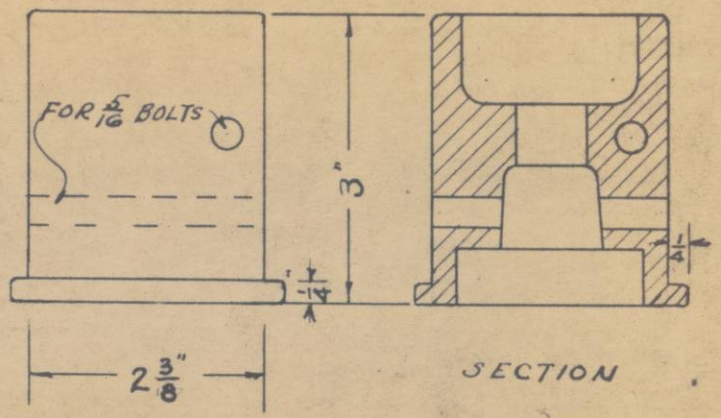

FLANGE FOR SMOUSE CASTER FOR 2 1/2" x 2 1/2" ANGLE

PATTERN NO. 1000

SEE B. P. NO. 15735-ES.

THE HAMILTON MFG. CO.

DON'T REMOVE THIS LEAF FROM BOOK

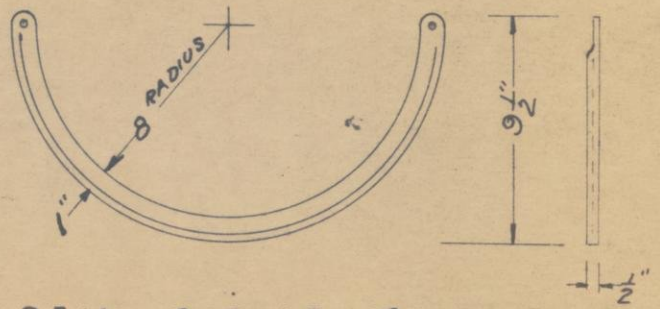

SEMI CIRCLE MALLEABLE IRON

PATTERN NO. 1017

SEE B. P. NO. 0013610-A

THE HAMILTON MFG. CO.

DON'T REMOVE THIS LEAF FROM BOOK

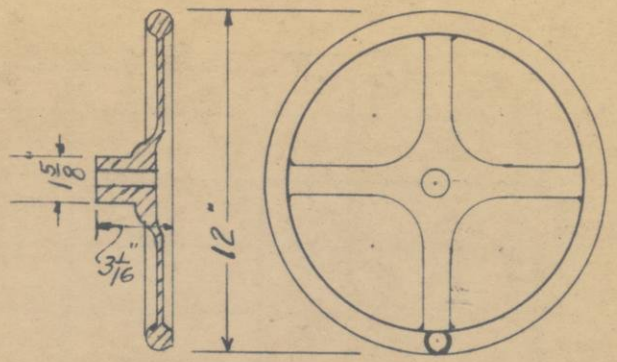

12"- HAND WHEEL

PATTERN NO. 1022

SEE B. P. NO. 504-C.

13

THE HAMILTON MFG. CO.

DON'T REMOVE THIS LEAF FROM BOOK

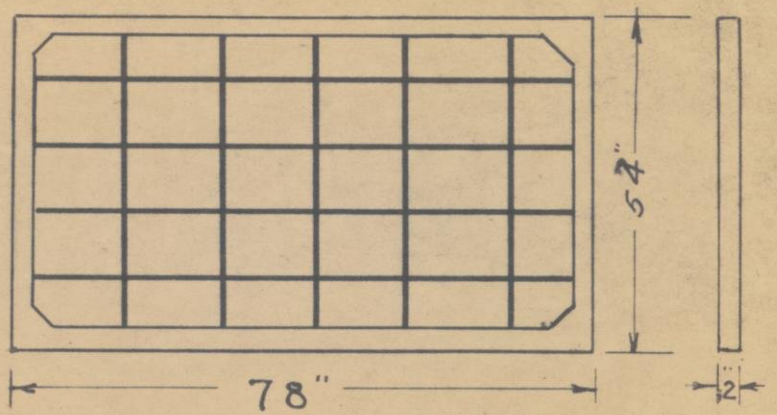

54 x 78 IRON TOP

PATTERN NO. 1023-T

SEE B. P. NO. 15711-A

13"

THE HAMILTON MFG. CO.

DON'T REMOVE THIS LEAF FROM BOOK

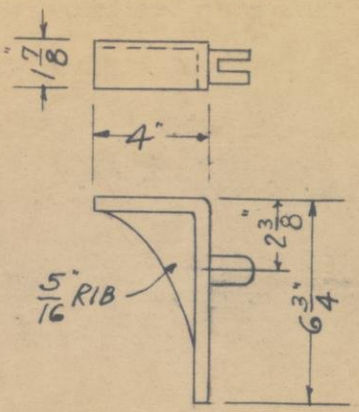

BRACKET FOR AIR KNOCKOUT

PATTERN NO. 1024

SEE B. P. NO. 762-F

13#

THE HAMILTON MFG. CO.

DON'T REMOVE THIS LEAF FROM BOOK

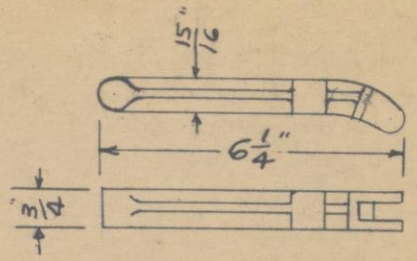

ARM FOR AIR KNOCKOUT.

SEE B. P. NO. 762-F

PATTERN NO. 1025

THE HAMILTON MFG. CO.

DON'T REMOVE THIS LEAF FROM BOOK

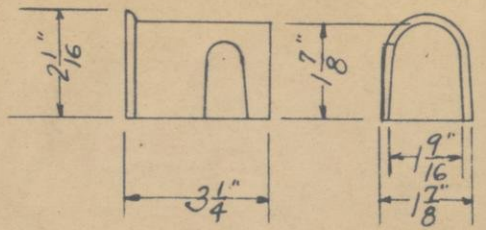

HOUSING FOR AIR KNOCKOUT.

SEE B. P. NO. 762-F PATTERN NO. 1026

THE HAMILTON MFG. CO.

DON'T REMOVE THIS LEAF FROM BOOK

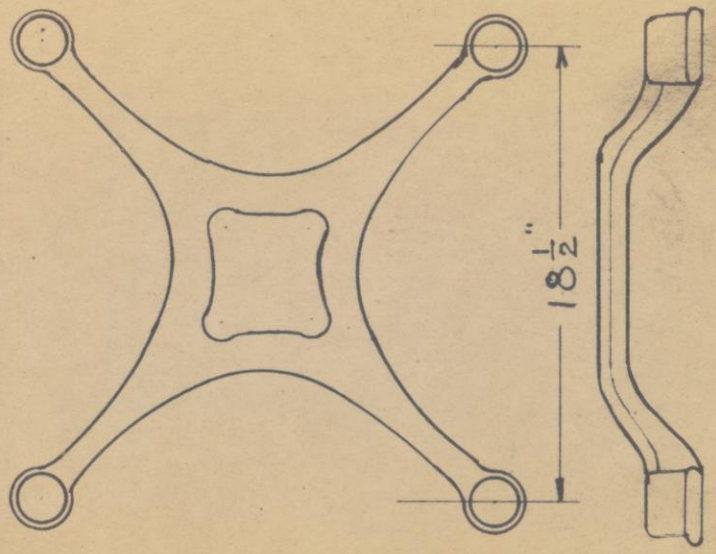

CAST IRON FRAME FOR #15731-A TRUCK.

PATTERN NO. 1028

SEE B. P. NO. 506-C.

HAMILTON MFG. CO.

DO NOT REMOVE THIS LEAF FROM BOOK

OK

Check Dim.

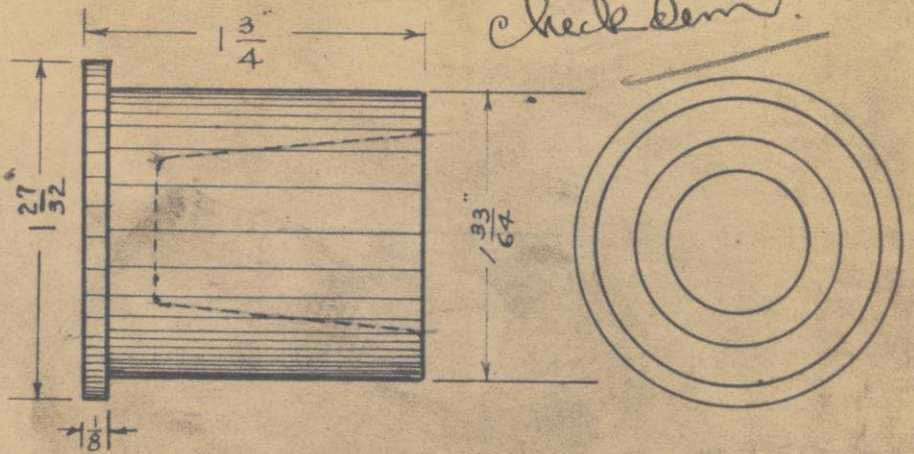

Plug For Pipe on No. 15731-A & No. 15731-B. Truck.

DATE-

SEE B. P. NO. 578-C

PATTERN NO. 1030.

a.a.m. 1-7-30.

OLD B.P. No. 15731 AS-CHG. 12-21-39.

13

THE HAMILTON MFG. CO.

DON'T REMOVE THIS LEAF FROM BOOK

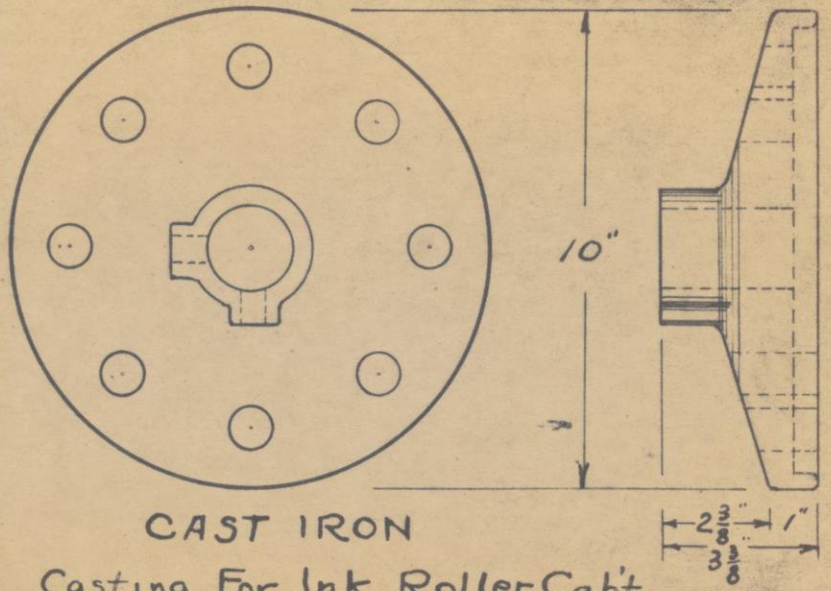

CAST IRON

Casting For Ink Roller Cab't.

PATTERN NO. 1031.

SEE B. P. NO. 507-C

13

THE HAMILTON MFG. CO.

DON'T REMOVE THIS LEAF FROM BOOK

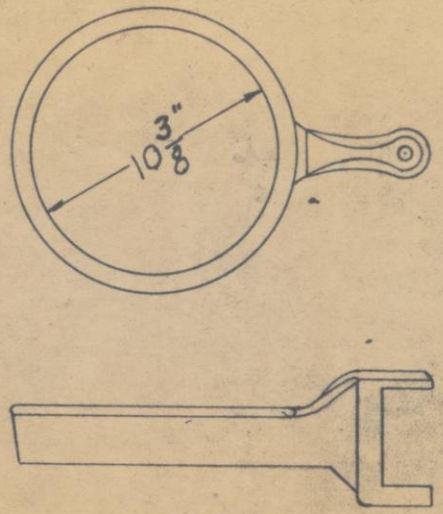

SWINGING BRACKET FOR GLUE POT.
(FOR 4 QT POT) INTN'L TYPE GH4.

PATTERN NO. 1035

SEE B. P. NO. 0.014224.

THE HAMILTON MFG. CO.

DON'T REMOVE THIS LEAF FROM BOOK

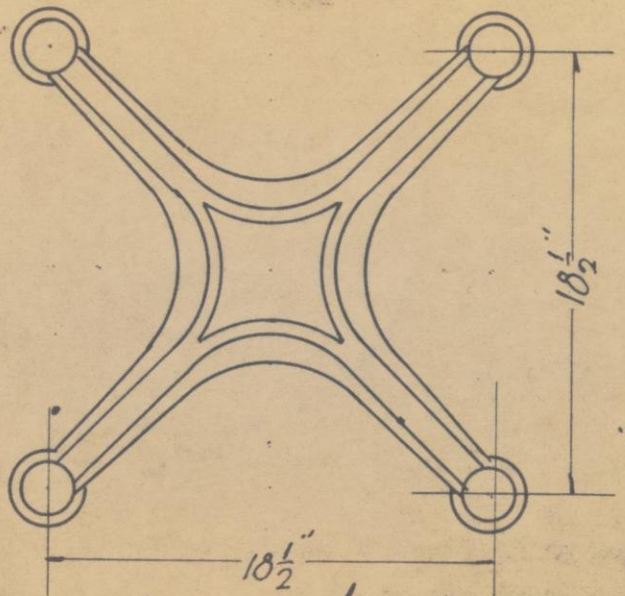

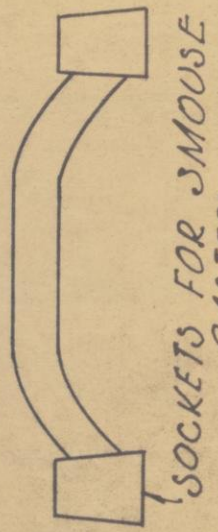

SOCKETS FOR 3 MOUSE CASTERS

FRAME For No. 15131-B TRUCK

PATTERN NO. 1036

SEE B. P. NO. 509-C.

L.L. 11-7-29

13

THE HAMILTON MFG. CO.

DON'T REMOVE THIS LEAF FROM BOOK

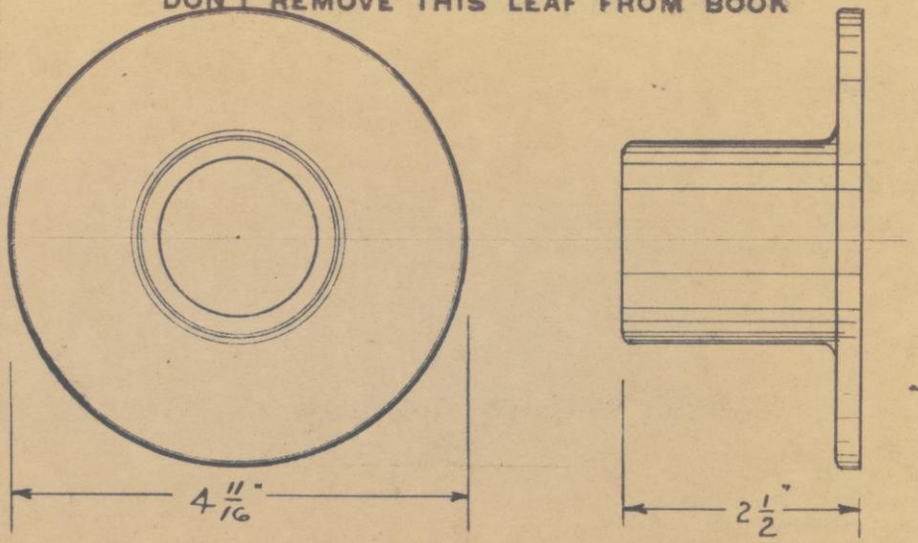

BOX FOR #6640 GILDING PRESS.
CAST BRASS.

PATTERN NO. 1037

SEE B. P. NO. 6640-6645-W.

THE HAMILTON MFG. CO.

DON'T REMOVE THIS LEAF FROM BOOK

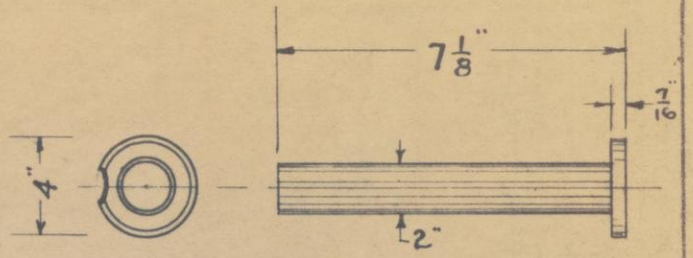

SLEEVE FOR No. 6640 GILDING PRESS.
CAST IRON.

PATTERN NO. 1038

SEE B. P. NO. 6640 & 6645.

L.C.L. 11.27.29
REV RIBS 4-9-30 KGS

THE HAMILTON MFG. CO.

DON'T REMOVE THIS LEAF FROM BOOK

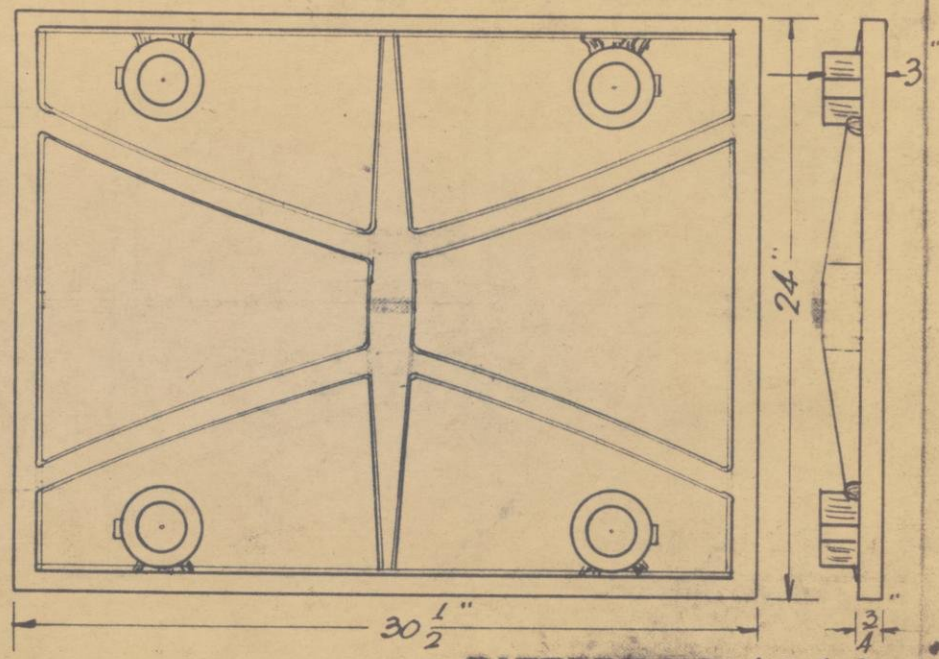

PATTERN NO. 1046

SEE B. P. NO. 510-C

13

REV RIBS 4

THE HAMILTON MFG. CO.

DON'T REMOVE THIS LEAF FROM BOOK

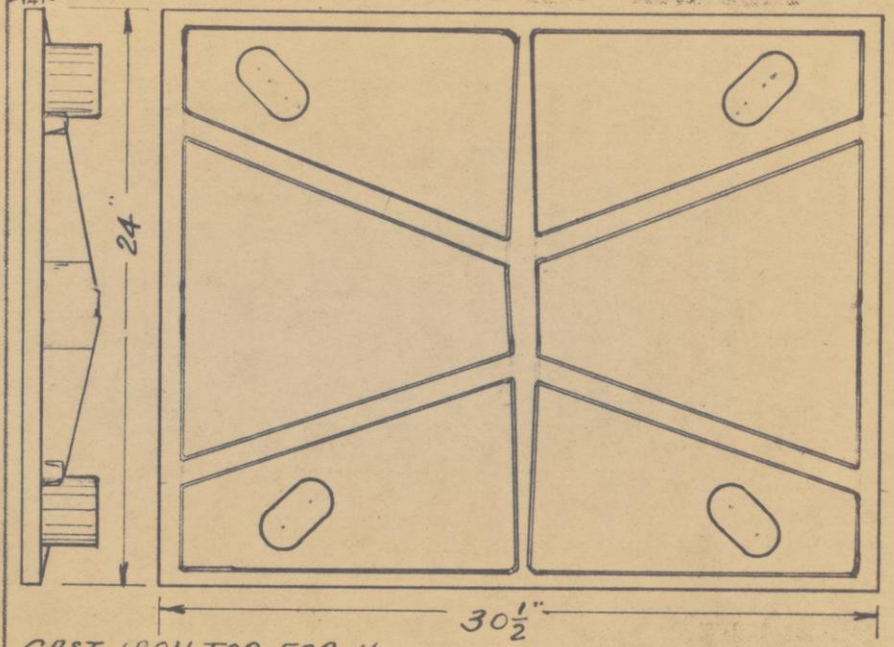

CAST IRON TOP FOR No. 15735-A.

SEE B. P. NO. 513-C.

PATTERN NO. 1049.

REV RIBS 4-9-30 K.G.S.

THE HAMILTON MFG. CO.

DON'T REMOVE THIS LEAF FROM BOOK

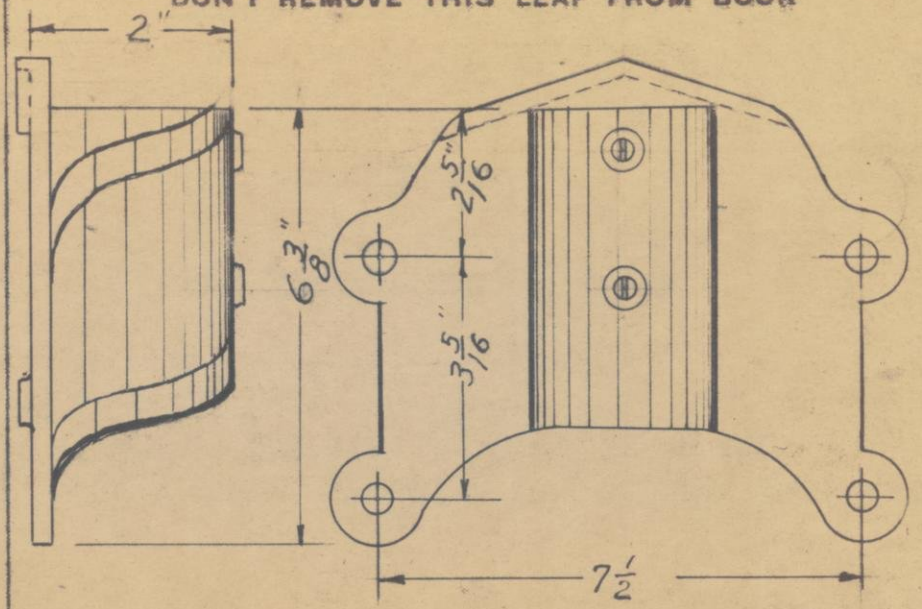

BRACKET FOR No. T.X. 12140-B. WIRING (CAST IRON)

PATTERN NO. 1055.

SEE B. P. NO. 514-C.

REV. 2-13-30

THE HAMILTON MFG. CO.

DON'T REMOVE THIS LEAF FROM BOOK

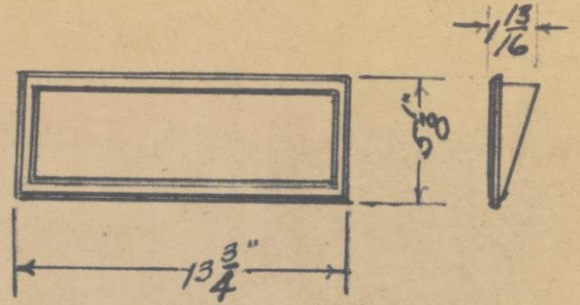

CAST BRASS FRONT FOR
SHADOW BOX PER B.P. NO. 24988-S-B.

PATTERN NO. 1056

SEE B. P. NO. 24988-S-B.

THE HAMILTON MFG. CO.

DON'T REMOVE THIS LEAF FROM BOOK

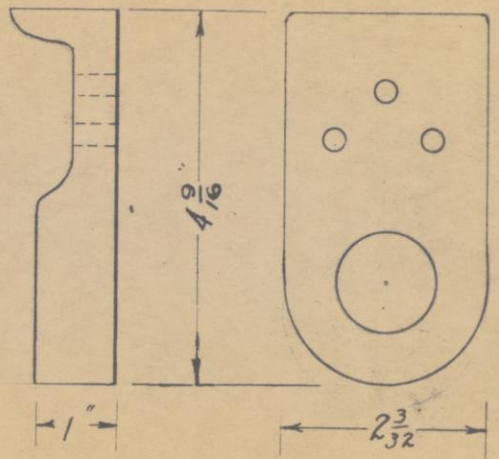

BRACKET FOR TRUCK WHEEL
CAST IRON

PATTERN NO. 1058

SEE B. P. NO. 13495-S

HAMILTON MFG. CO.

DO NOT REMOVE THIS LEAF FROM BOOK

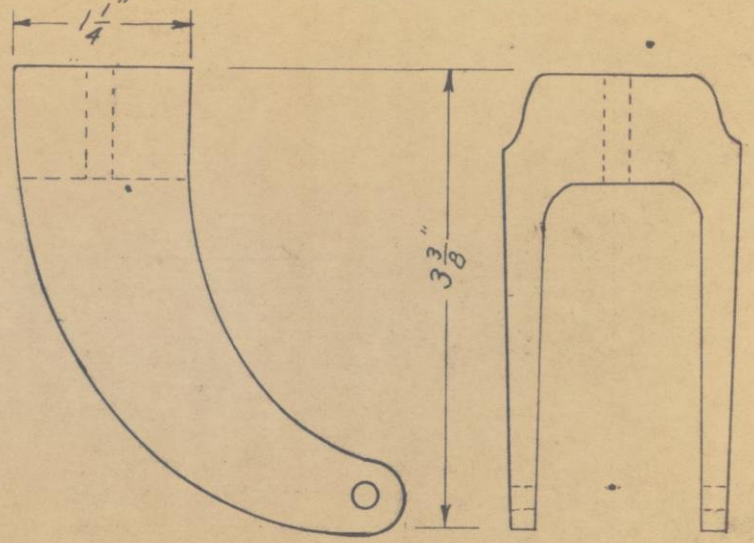

CASTER FORK
MALLEABLE IRON

DATE-

SEE B. P. NO. 0014986

PATTERN NO. 1059

THE HAMILTON MFG. CO.

DON'T REMOVE THIS LEAF FROM BOOK

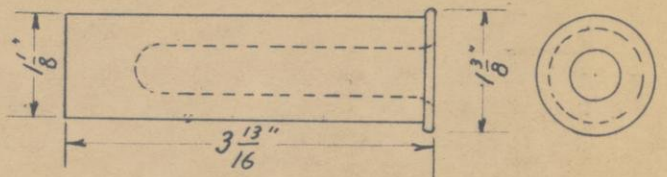

CASTER SOCKET
MALLEABLE IRON

PATTERN NO. 1060

SEE B. P. NO. 0014986

THE HAMILTON MFG. CO.

DON'T REMOVE THIS LEAF FROM BOOK

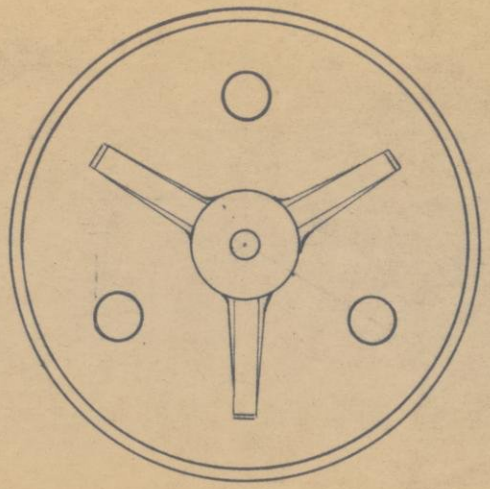

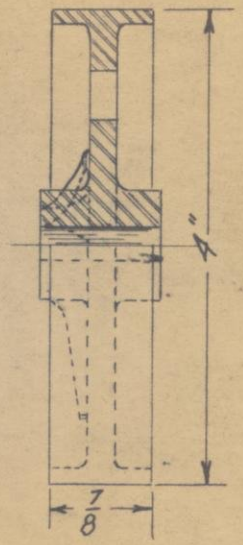

CASTER WHEEL
MALLEABLE IRON

PATTERN NO. 1061

SEE B. P. NO. 0014986

THE HAMILTON MFG. CO.

DON'T REMOVE THIS LEAF FROM BOOK

REMOVED 4 5/8" DIM. & HOLES 1/9/59

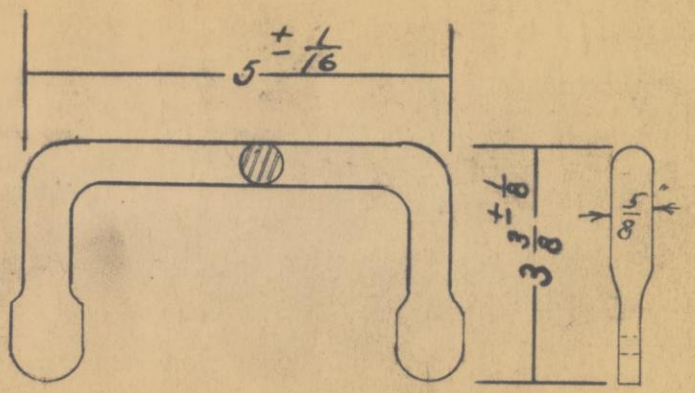

GALLEY TRUCK HANDLE
MALLEABLE IRON

PATTERN NO. 1062

SEE B. P. NO. 516-C

THE HAMILTON MFG. CO.

DON'T REMOVE THIS LEAF FROM BOOK

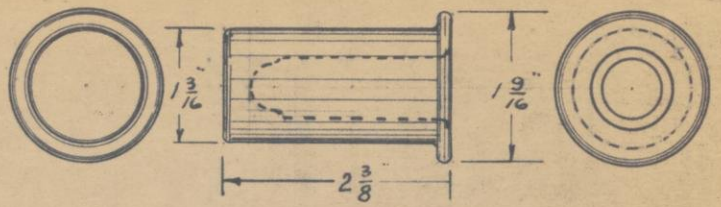

SOCKET FOR STOCK FORWARDING TABLE.

MATERIAL - MALLEABLE IRON.

SCALE 6" = 1'0"

PATTERN NO. 1063.

SEE B. P. NO. 517-C.

ATM. 2-5-20.

HAMILTON MFG. CO.

DO NOT REMOVE THIS LEAF FROM BOOK

DATE- 2-12-30 L.C.L.

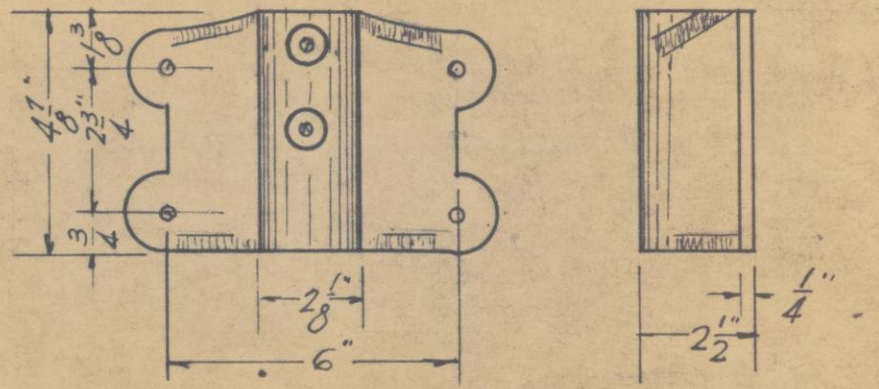

BRACKET FOR No. T.K. 2140-B WIRING

SEE B. P. NO. 518-C

PATTERN NO. 1064

HAMILTON MFG. CO.

DO NOT REMOVE THIS LEAF FROM BOOK

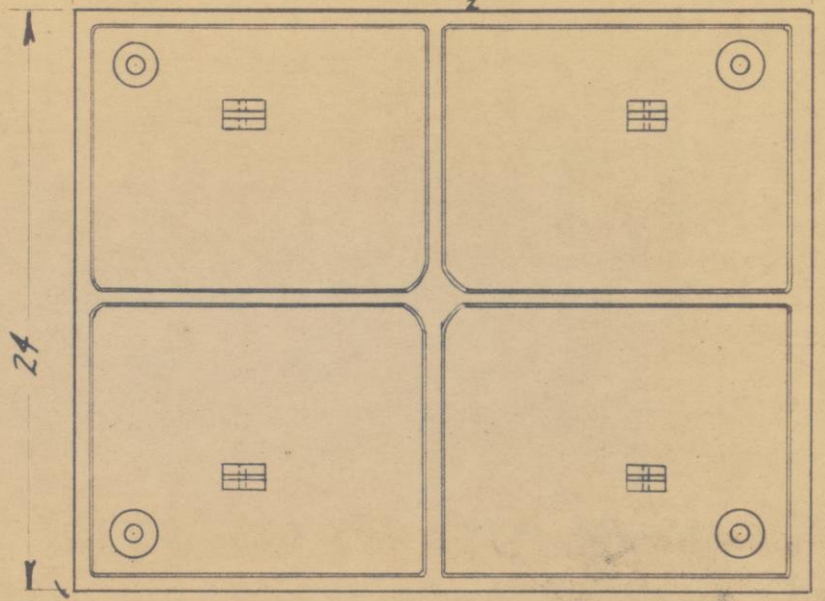

DATE- 3-26-30

C.I. SURFACE FOR NEW STYLE ADJ. TRUCK

SEE B. P. NO. 519-C

PATTERN NO. 1076

THE HAMILTON MFG. CO.

DON'T REMOVE THIS LEAF FROM BOOK

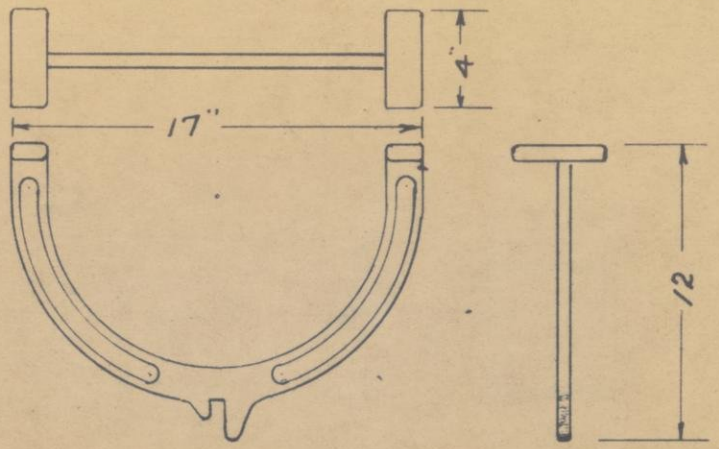

CIRCLE IRON FOR FORM TRUCK.

CAST IRON.

PATTERN NO. 1083.

SEE B. P. NO. 522-C

THE HAMILTON MFG. CO.

DON'T REMOVE THIS LEAF FROM BOOK

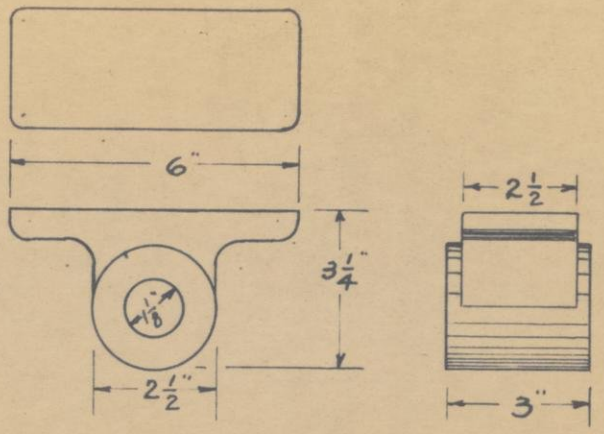

IRON TOP BEARING FOR FORM TRUCK.
CAST IRON.

PATTERN NO. 1084

SEE B. P. NO. 523-C

THE HAMILTON MFG. CO.

DON'T REMOVE THIS LEAF FROM BOOK

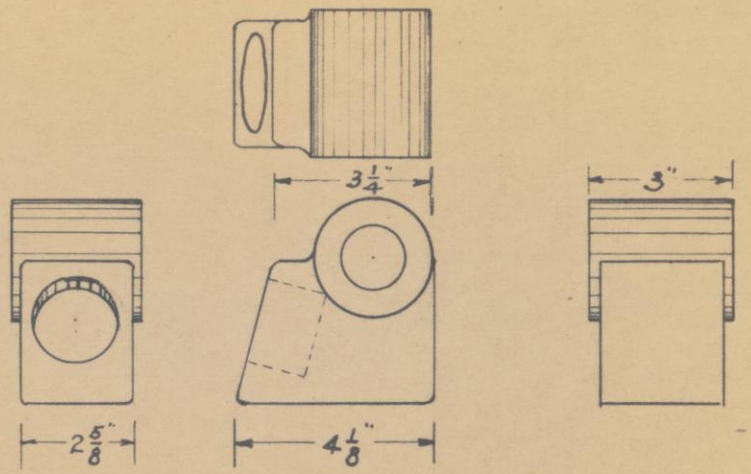

FORM TRUCK SHAFT BEARING.

CAST IRON.

PATTERN NO. 1085

SEE B. P. NO. 524-C

THE HAMILTON MFG. CO.

DON'T REMOVE THIS LEAF FROM BOOK.

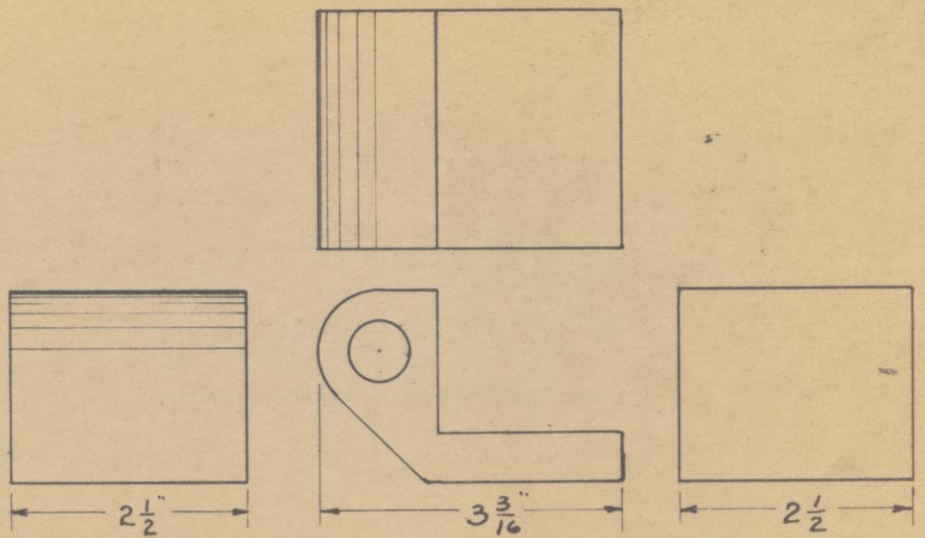

HANDLE BEARING FOR FORM TRUCK.

CAST IRON.

PATTERN NO. 1086.

SEE B. P. NO. 525-C

THE HAMILTON MFG. CO.

DON'T REMOVE THIS LEAF FROM BOOK

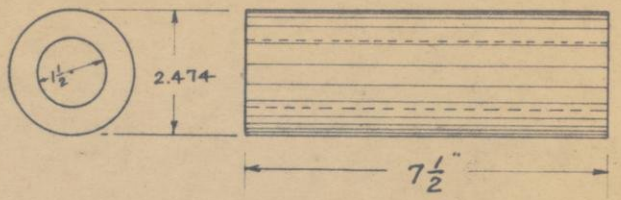

PIPE UPRIGHT BEARING FOR FORM TRUCK.

MATERIAL - CAST IRON.

PATTERN NO. 1087

SEE B. P. NO. 526-C

THE HAMILTON MFG. CO.

DON'T REMOVE THIS LEAF FROM BOOK

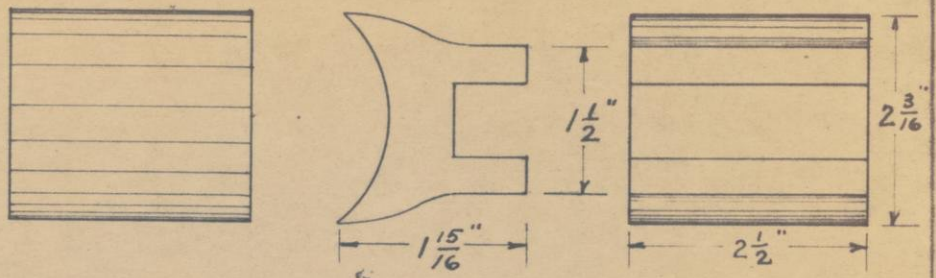

FORM TRUCK STOP GUIDE

CAST IRON

PATTERN NO. 1088.

SEE B. P. NO. 527-C

THE HAMILTON MFG. CO.

DON'T REMOVE THIS LEAF FROM BOOK

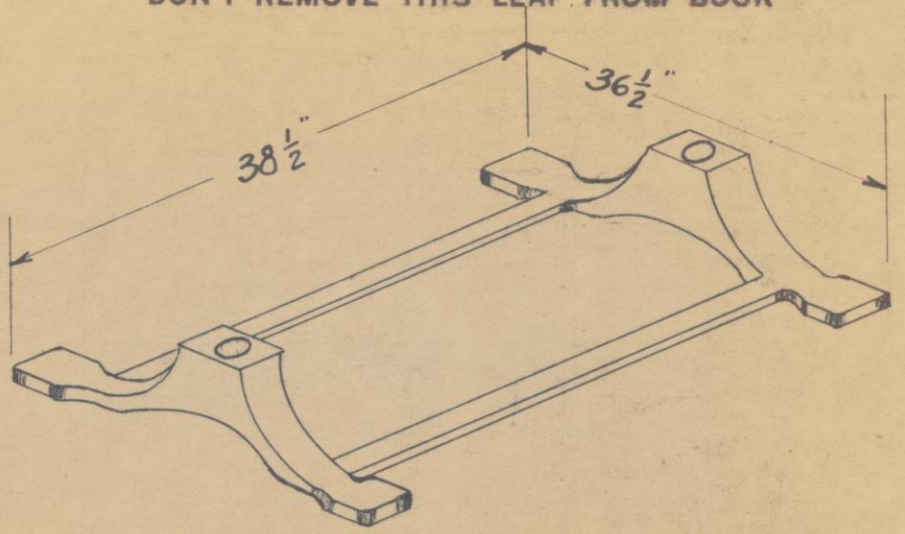

BASE FOR FORM TRUCK.

CAST IRON.

PATTERN NO. 1089.

SEE B. P. NO. 528-C

THE HAMILTON MFG. CO.

DON'T REMOVE THIS LEAF FROM BOOK

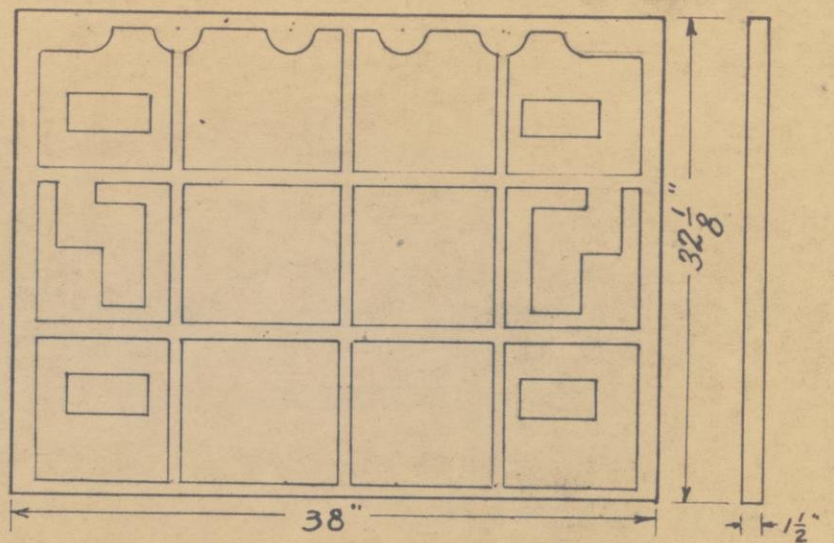

TOP FOR FORM TRUCK.

CAST IRON.

PATTERN NO. 1090.

SEE B. P. NO. 529-C

THE HAMILTON MFG. CO.

DON'T REMOVE THIS LEAF FROM BOOK

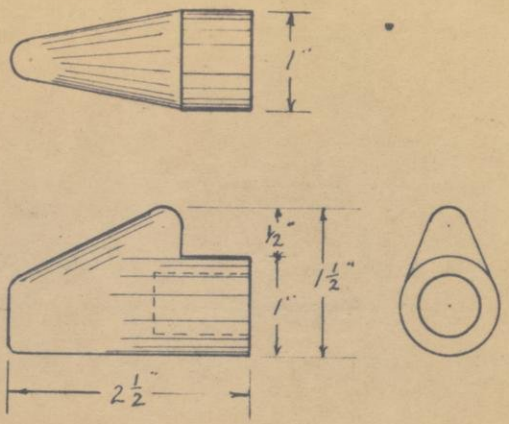

HOOK FOR FORM TRUCK TOP.

CAST IRON.

PATTERN NO. 1091.

SEE B. P. NO. 530-C.

THE HAMILTON MFG. CO.

DON'T REMOVE THIS LEAF FROM BOOK

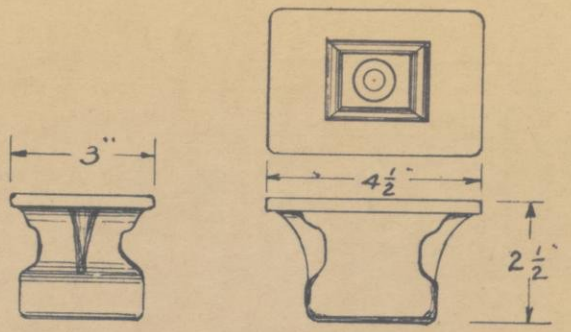

FORM TRUCK CASTER SOCKET.

MATERIAL- MALLEABLE IRON.

PATTERN NO. 1092

SEE B. P. NO. 15735-D-S.

HAMILTON MFG. CO.

DO NOT REMOVE THIS LEAF FROM BOOK

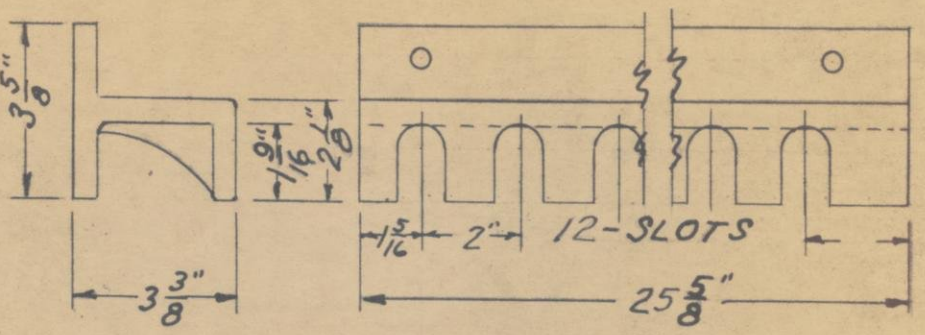

GUIDE FOR CHASE RACK

DATE- 4-30-30 MAY -7 1930

SEE B. P. NO. 531-C

PATTERN NO. 1093

HAMILTON MFG. CO.

DO NOT REMOVE THIS LEAF FROM BOOK

DATE- 4-30-30

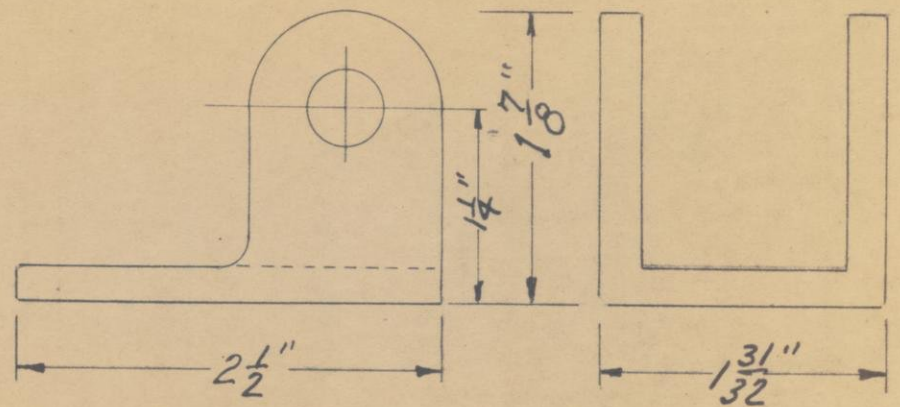

BRACKET FOR ROLLER

SEE B. P. NO. 532-C

PATTERN NO. 1094

HAMILTON MFG. CO.

DO NOT REMOVE THIS LEAF FROM BOOK

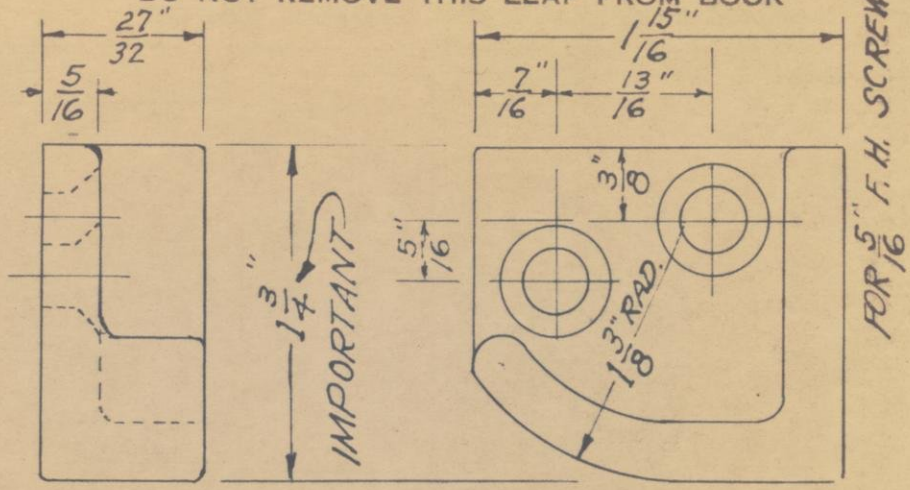

MADE LEFT & RIGHT
(THE RIGHT BEING TAPPED)

BRACKETS FOR MAGAZINE UNIT

SEE B. P. NO. 533-C PATTERN NO. 1095

DATE- 4-25-30

HAMILTON MFG. CO.

DO NOT REMOVE THIS LEAF FROM BOOK

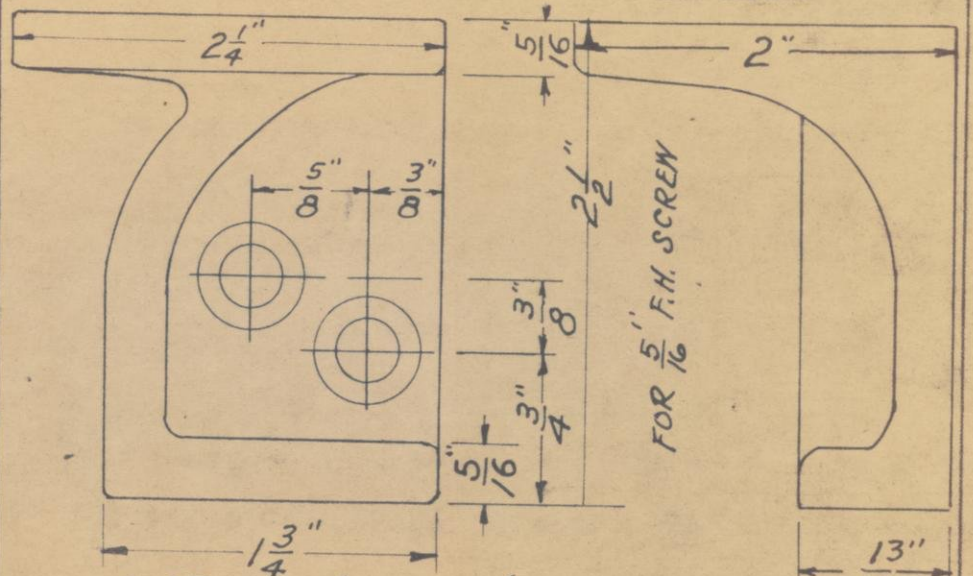

DATE- 4-25-30

MADE LEFT & RIGHT-(RIGHT BEING TAPPED) 6

BRACKET FOR MAGAZINE UNIT

SEE B. P. NO. 533-C

PATTERN NO. 1096

HAMILTON MFG. CO.

DO NOT REMOVE THIS LEAF FROM BOOK

DATE- 4-30-30

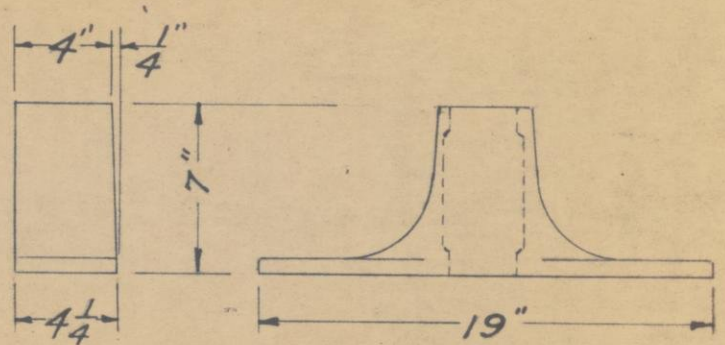

BRACKET FOR FORM RACK

SEE B. P. NO. 536-C

PATTERN NO. 1097

HAMILTON MFG. CO.

DO NOT REMOVE THIS LEAF FROM BOOK

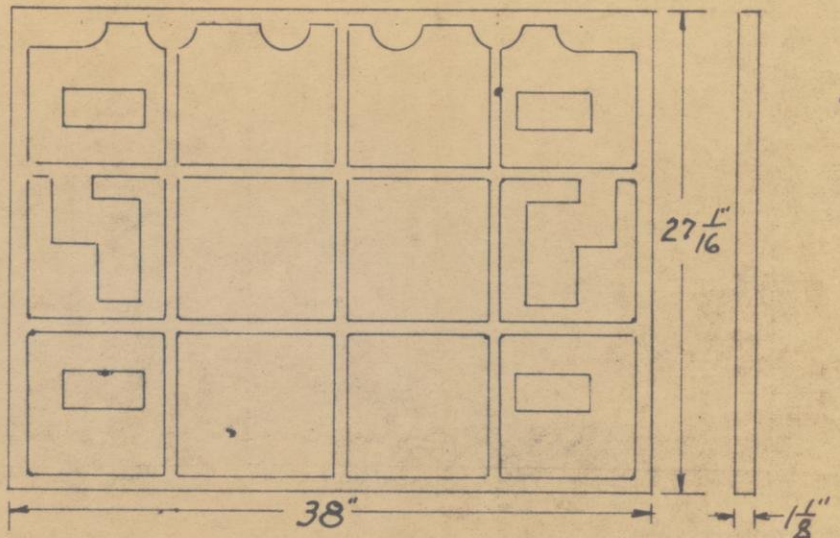

DATE-

TOP FOR FORM TRUCK

CAST IRON.

SEE B. P. NO. 535-C

PATTERN NO. 1098

14

HAMILTON MFG. CO.

DO NOT REMOVE THIS LEAF FROM BOOK

DATE- 5-8-30

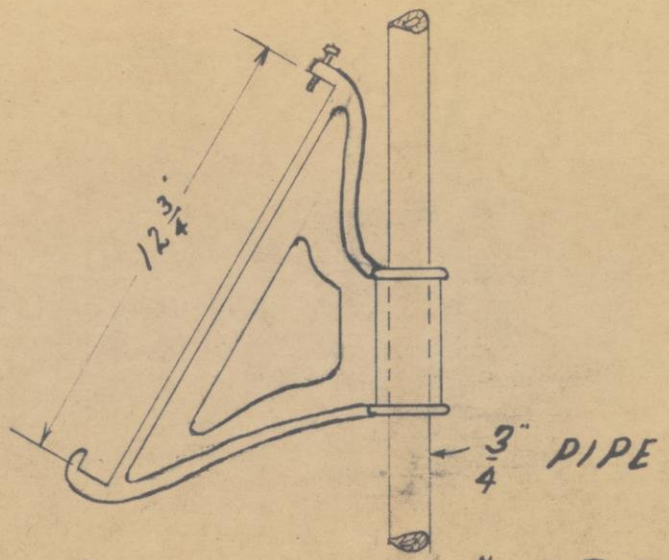

REGULAR 12" BRACKET FOR 3/4" PIPE

SEE B. P. NO. 537C

PATTERN NO. 1099

HAMILTON MFG. CO.

DO NOT REMOVE THIS LEAF FROM BOOK

(RIGHT & LEFT)

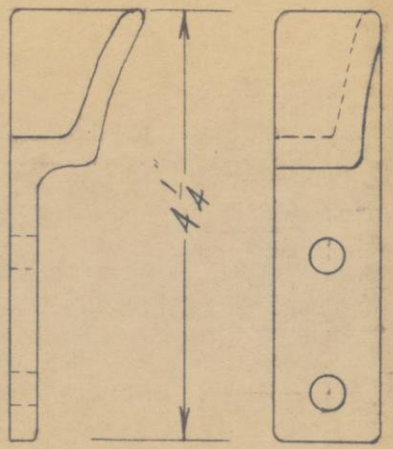

DATE- 6-12-30.

BRACKETS FOR LINOTYPE MAGAZINE RACKS

SEE B. P. NO. 538-C

PATTERN NO. 1115

HAMILTON MFG. CO.

DO NOT REMOVE THIS LEAF FROM BOOK

(RIGHT & LEFT)

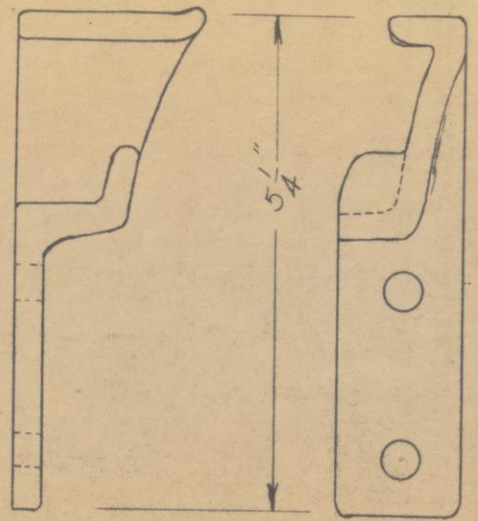

DATE- 6-12-30

BRACKETS FOR LINOTYPE MAGAZINE RACKS

SEE B. P. NO. 539-C

PATTERN NO. 1116

HAMILTON MFG. CO.

DO NOT REMOVE THIS LEAF FROM BOOK

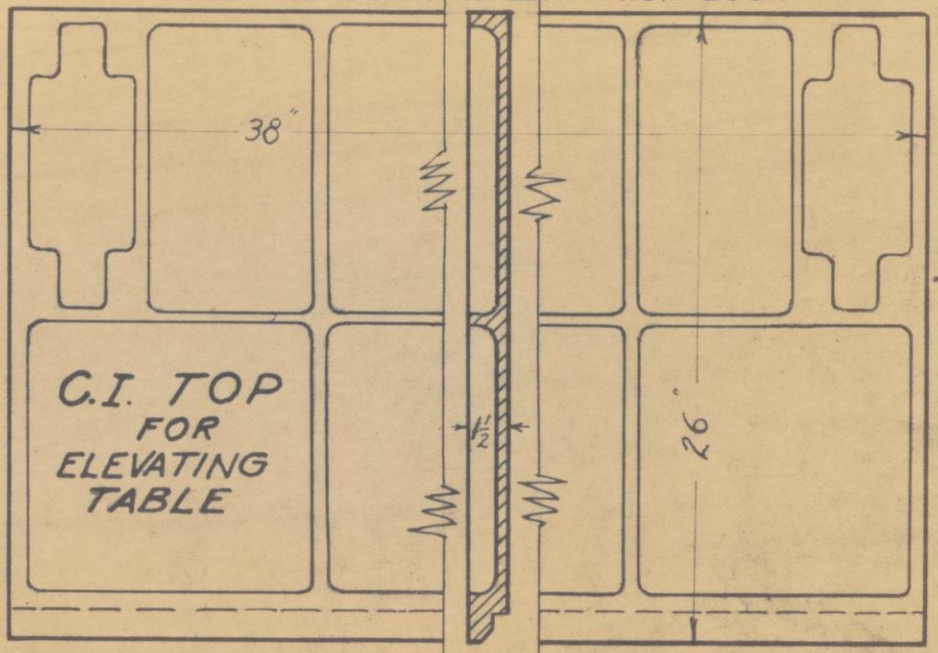

DATE-

SEE B. P. NO. 0015662-B PATTERN NO. 1117

DRW. No 2061-3396

FINISH: [illegible]

REPORT ANY ERRORS TO ENGINEERING DEPT.

SYMB.	TOOL NUMBER
△	
△	
△	

NEXT DRAWING No	NAME OF PRODUCT	REQ.
3061-3459	OVERBED TABLE	
" "	INST. TABLE	

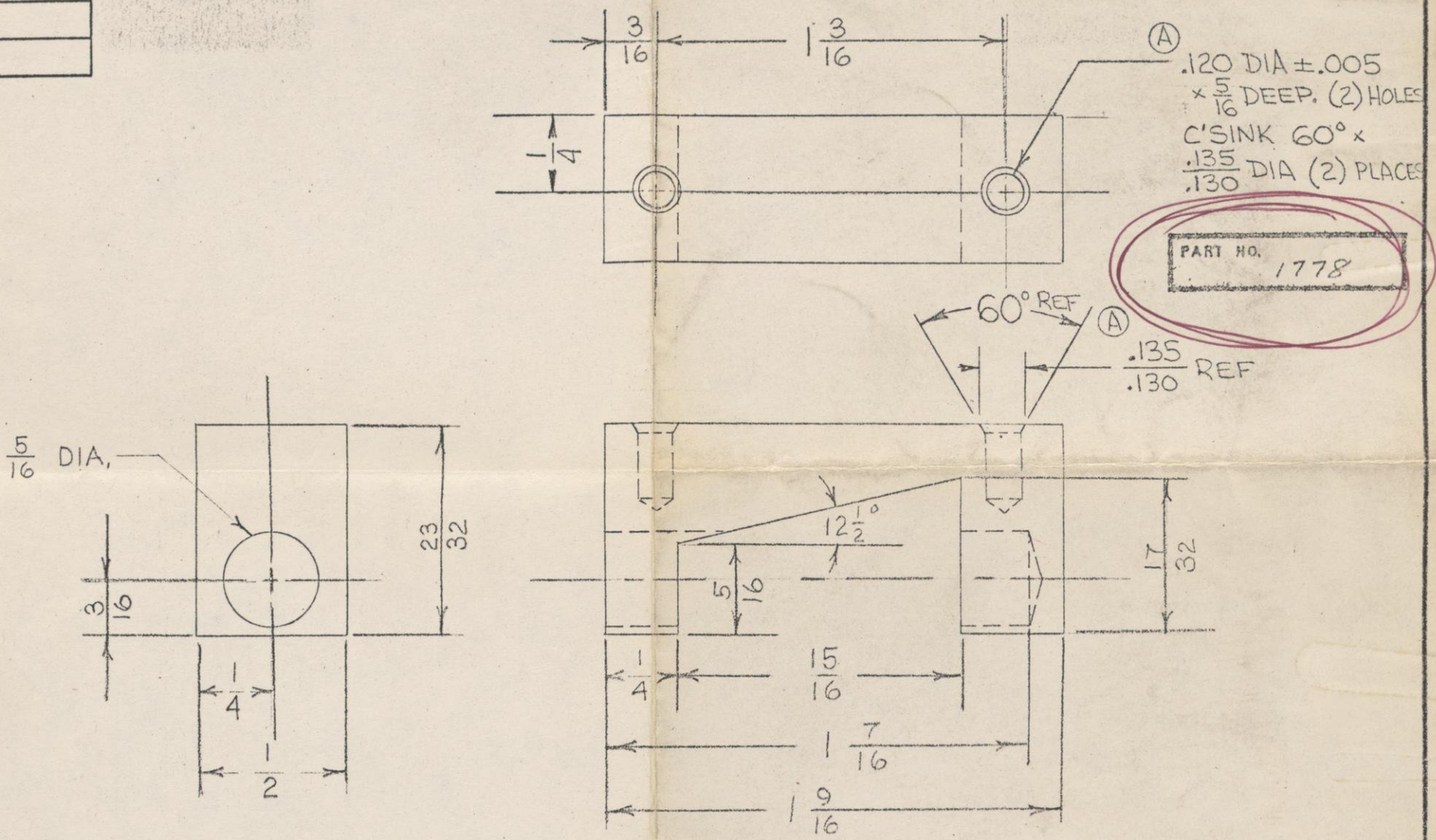

POST No	DRAWING No	DESCRIPTION	SIZE AND OR GAGE	DIMENSIONS OR LENGTH	SPEC. OR STOCK No	REQ. P. UNIT	REMARKS
		STEEL-INVESTMENT CASTING-HARDENED					

SYM	DATE	E. C. No

SYM	DATE	E. C. No
A	6-28-66	2548

ALL DIMENSIONS IN DECIMALS WITHOUT LIMITS, TO BE HELD PLUS OR MINUS .005
ALL DIMENSIONS IN FRACTIONS WITHOUT LIMITS, TO BE HELD PLUS OR MINUS 1/64
ALL ANGLES WITHOUT LIMITS, TO BE HELD PLUS OR MINUS 1/4°

DR. T. S. DATE
CH. CHET DATE 8-27-66
SCALE

TITLE WEDGE

S. O. PURCHASED

INSTITUTIONAL INDUSTRIES INC.
CINCINNATI 38, OHIO

DRW. No. 2061-3396

SUPERSEDES X 08106 5A

OGILVIE PRESS, INC., BROOKLYN 17, N. Y. REPROVEL NO. 440M 25546

HAMILTON MFG. CO.

DO NOT REMOVE THIS LEAF FROM BOOK

BRACKET FOR ARTIST'S EASEL-

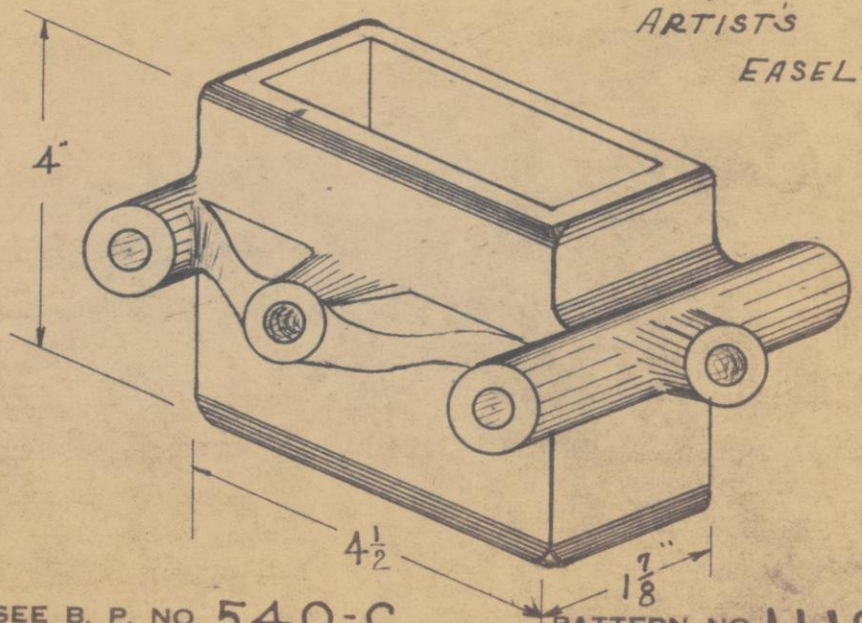

DATE-

SEE B. P. NO. 540-C.

PATTERN NO. 1119.

14

THE HAMILTON MFG. CO.

DON'T REMOVE THIS LEAF FROM BOOK

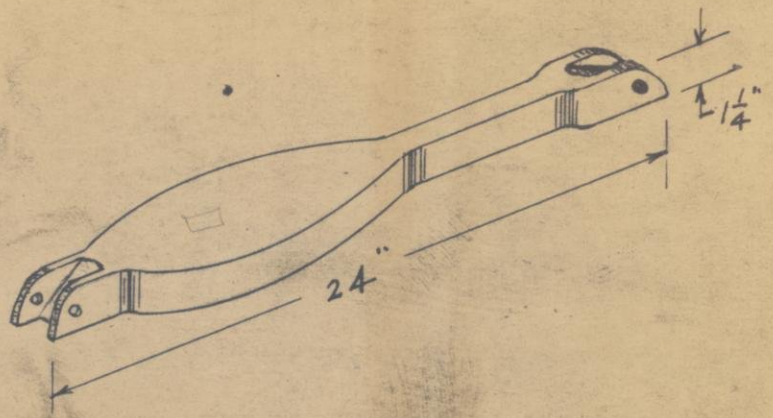

BASE FOR ARTIST'S EASEL PER B.P. No. 25866.

PATTERN NO. 1122.

SEE B. P. NO. 541-C

THE HAMILTON MFG. CO.

DON'T REMOVE THIS LEAF FROM BOOK

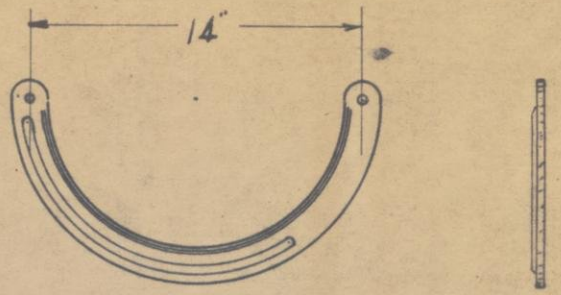

CIRCLE IRON FOR No. 239 & 1980 TABLES.

MALLEABLE IRON.

MAKE RIGHT & LEFT.

PATTERN NO. 1142.

SEE B. P. NO. 543-C.

AHM 9-23-30

HAMILTON MFG. CO.

DO NOT REMOVE THIS LEAF FROM BOOK

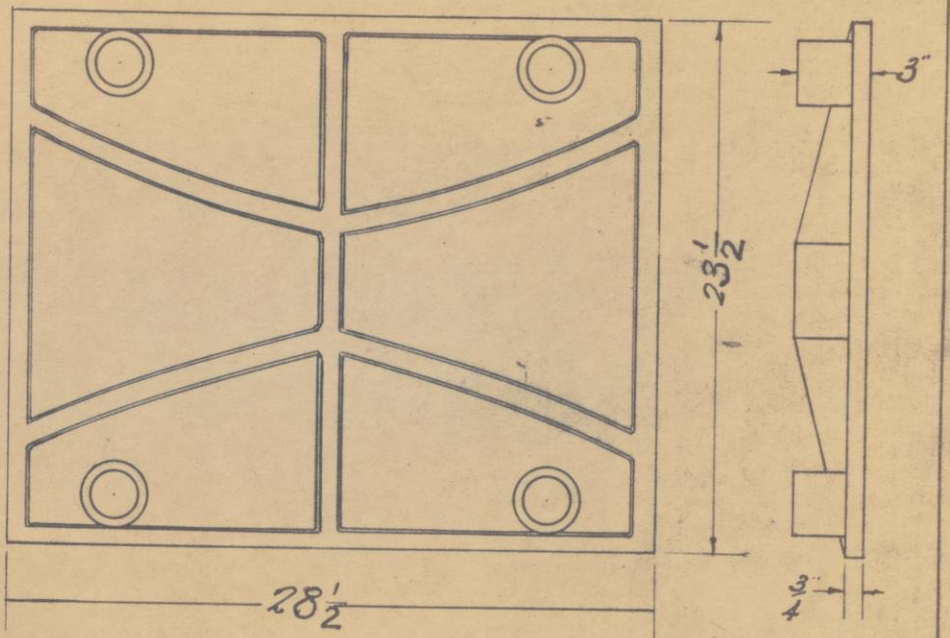

REV. 4-19-32
DATE. 9-25-30

SEE B. P. NO. 544C

PATTERN NO. 1143

14

HAMILTON MFG. CO.

DO NOT REMOVE THIS LEAF FROM BOOK

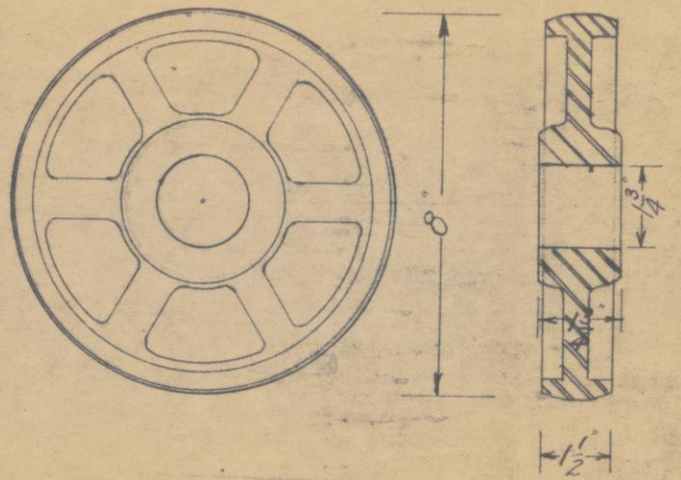

DATE- 10-22-30 K.G.S

8" WHEEL FOR HYATT BEARING

SEE B. P. NO. 545 . PATTERN NO. 1147

HAMILTON MFG. CO.

DO NOT REMOVE THIS LEAF FROM BOOK

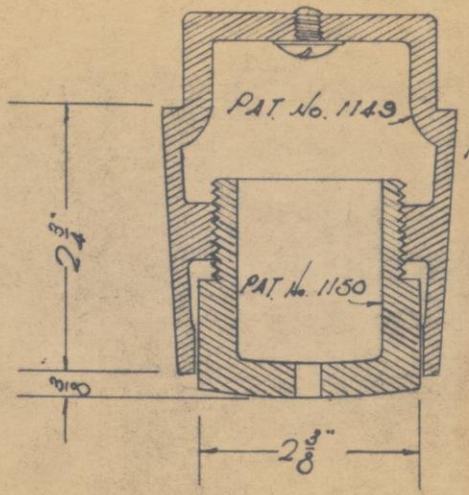

ADJUSTABLE SHOE
FOR 3" SQUARE
TUBULAR LEG

DATE-

SEE B. P. NO. 001591

PATTERN NO. 1149
1150

HAMILTON MFG. CO.

DO NOT REMOVE THIS LEAF FROM BOOK

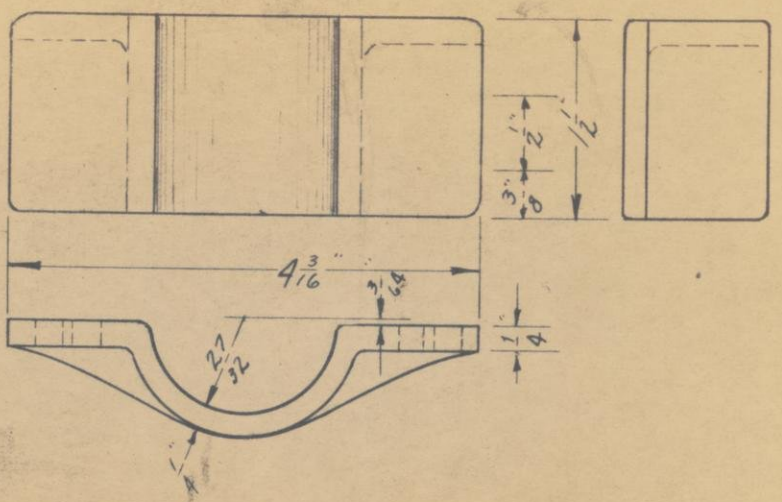

DATE 1-14-31

CLAMP FOR ADJUSTABLE BRACKET
FOR NO 1516 CABINET

SEE B. P. NO. 547-C PATTERN NO. 1157

14

HAMILTON MFG. CO.

DO NOT REMOVE THIS LEAF FROM BOOK

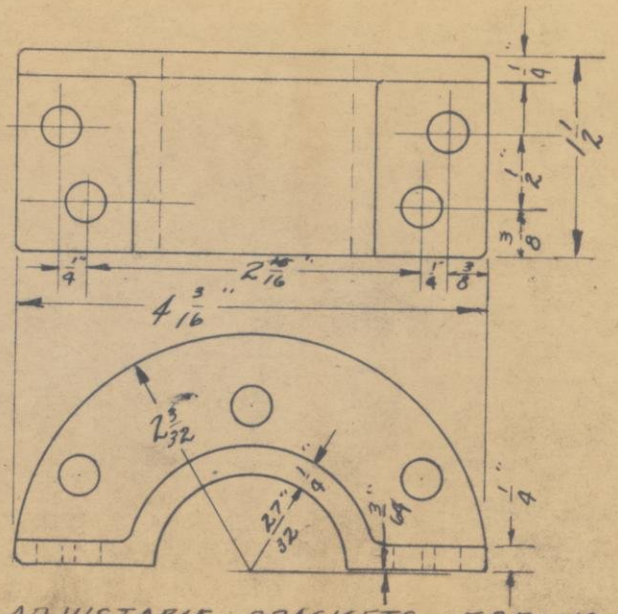

DATE- 1-14-31

CLAMP FOR ADJUSTABLE BRACKETS FOR NO. 1511G CAB'T

SEE B. P. NO. 548-C

PATTERN NO. 1158

HAMILTON MFG. CO.

DO NOT REMOVE THIS LEAF FROM BOOK

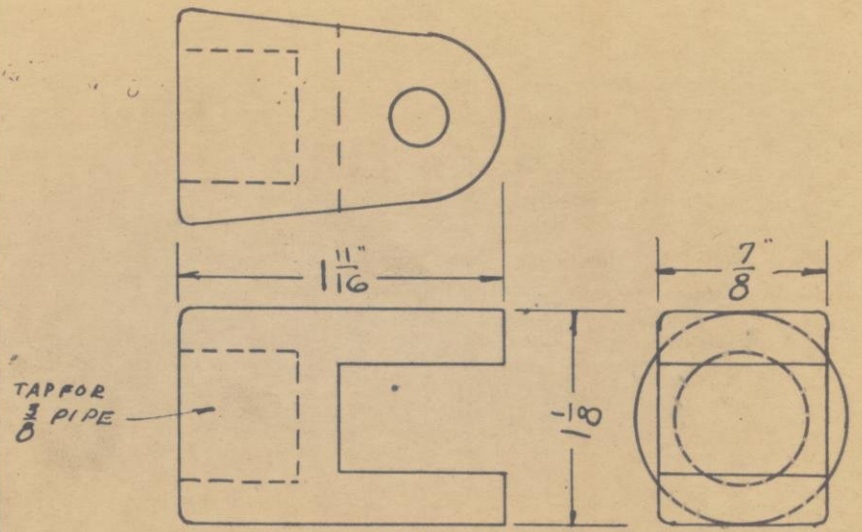

SWIVEL FOR SWING TRAY ARM

DATE-

SEE B. P. NO. 26273

PATTERN NO. 1159

HAMILTON MFG. CO.

DO NOT REMOVE THIS LEAF FROM BOOK

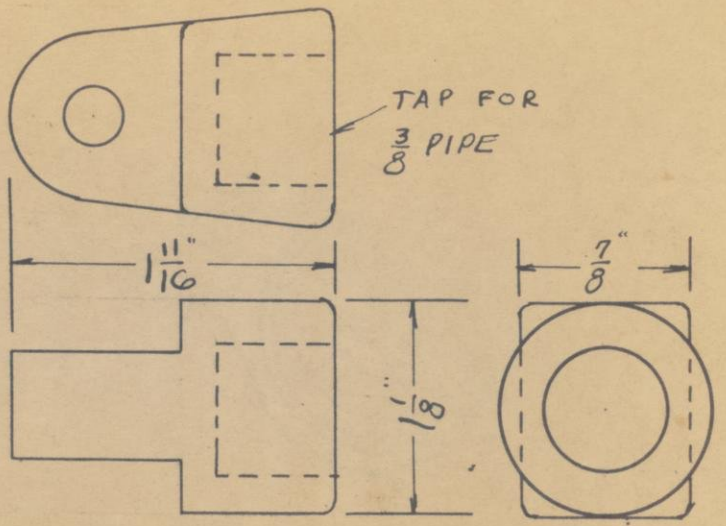

SWIVEL FOR SWING TRAY ARM

DATE-

SEE B. P. NO. 26273

PATTERN NO. 1160

DATE- REVISED 3-8-40 HEB.

HAMILTON MFG. CO.

DO NOT REMOVE THIS LEAF FROM BOOK

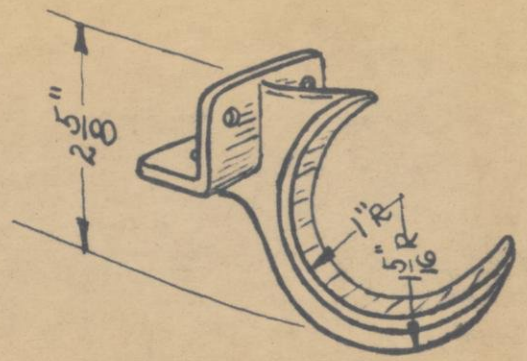

BRACKET FOR DUST COVER FOR
NO. 239-461 & 1980 TABLE

SEE B. P. NO. 239-CW PATTERN NO. 1161

HAMILTON MFG. CO.

DO NOT REMOVE THIS LEAF FROM BOOK

NO DRAWING

DATE-

SEE B. P. NO.

MOULDING NO. 1178

14

HAMILTON MFG. CO.

DO NOT REMOVE THIS LEAF FROM BOOK

DATE- 5-26-31 KD

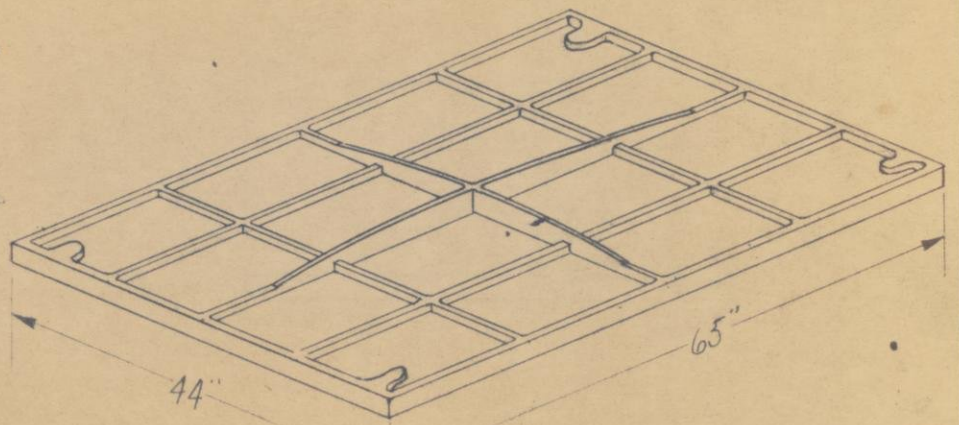

NEW STYLE 44X65 JOB IRON TOP

SEE B. P. NO. 0016883 C PATTERN NO. 1180-T

HAMILTON MFG. CO.

DO NOT REMOVE THIS LEAF FROM BOOK

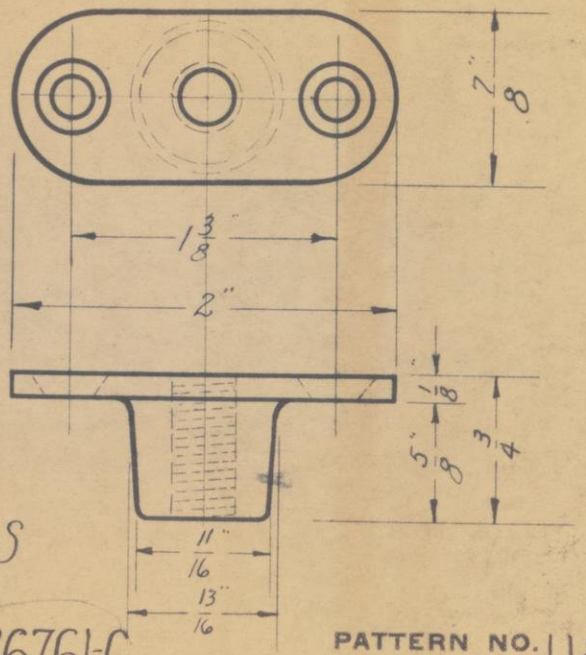

DATE- 5-21-31

CAST

BRASS

SEE B. P. NO. 26761-C

PATTERN NO. 1182

HAMILTON MFG. CO.

DO NOT REMOVE THIS LEAF FROM BOOK

DATE- 8-26-31 Light

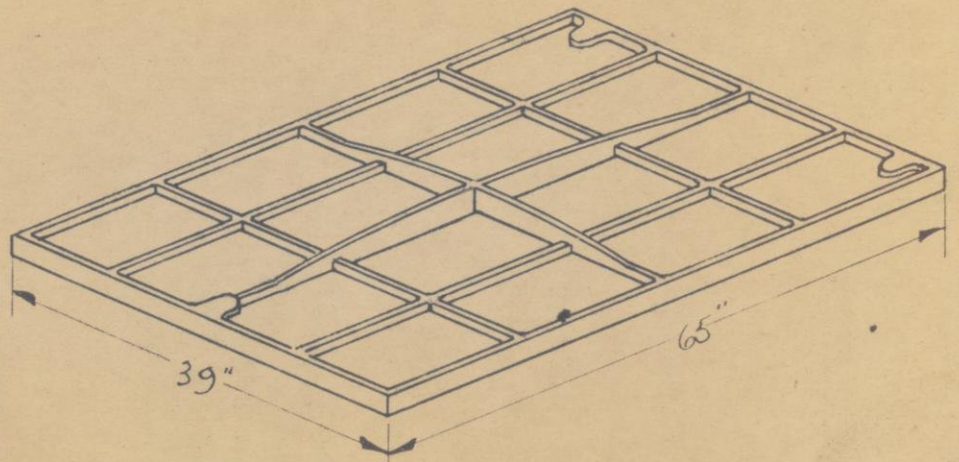

NEW STYLE 39"X65 JOB IRON TOP

SEE B. P. NO. 0017188-C PATTERN NO. 1191-T

HAMILTON MFG. CO.

DO NOT REMOVE THIS LEAF FROM BOOK

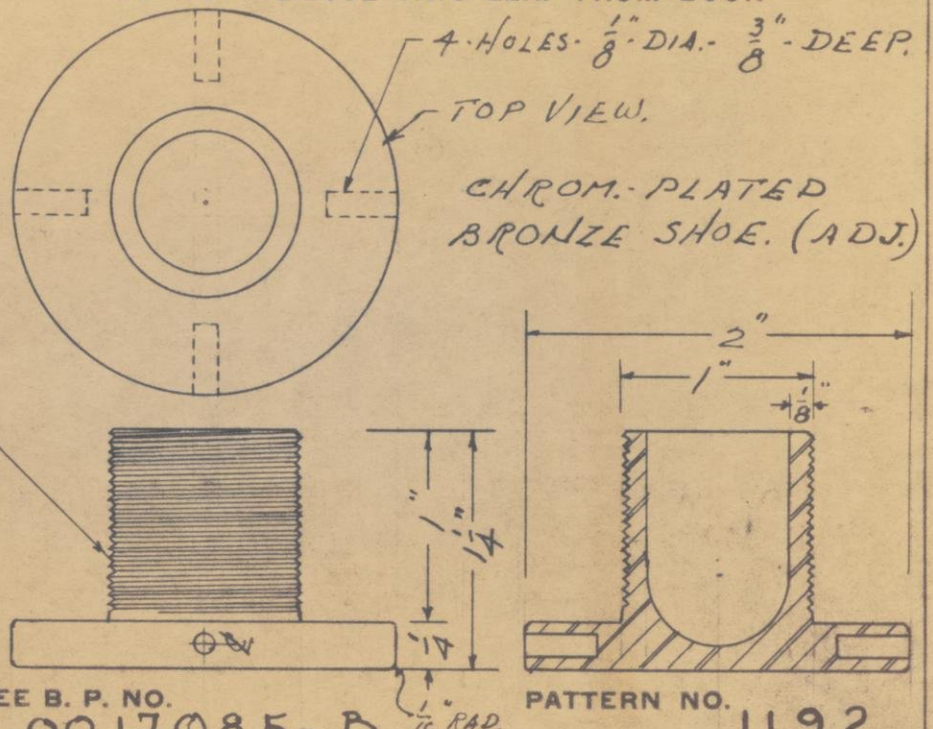

DATE- 8-

SEE B. P. NO. 0017085-B

PATTERN NO. 1192

HAMILTON MFG. CO.

DO NOT REMOVE THIS LEAF FROM BOOK

NO DRAWING

DATE-

SEE B. P. NO.

PATTERN NO. 1196

HAMILTON MFG. CO.

DO NOT REMOVE THIS LEAF FROM BOOK

DATE- 10-19-31

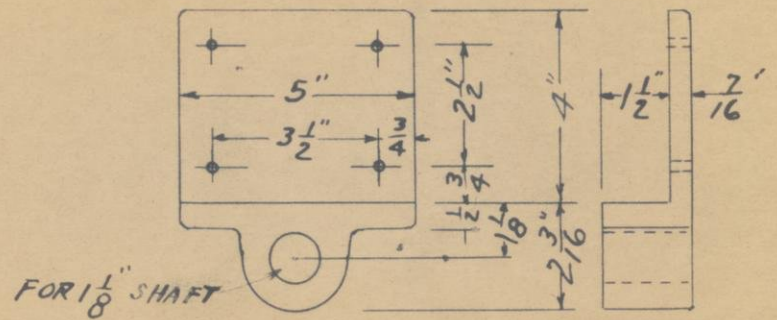

BRACKET FOR TRUCK

SEE B. P. NO. 559 - C PATTERN NO. 1197

HAMILTON MFG. CO.

DO NOT REMOVE THIS LEAF FROM BOOK

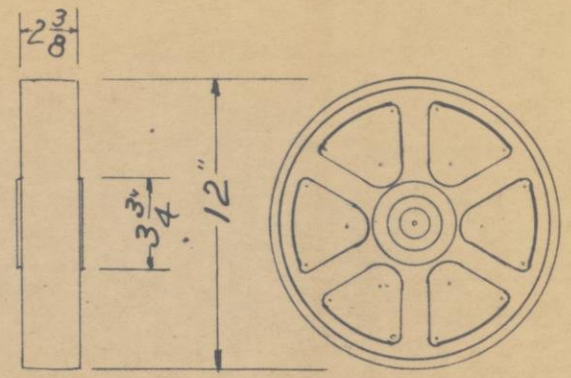

WHEEL FITTED WITH ZERK ALEMITE
AND BALL BEARING

DATE-

SEE B. P. NO. 560-C

PATTERN NO. 1198

HAMILTON MFG. CO.

DO NOT REMOVE THIS LEAF FROM BOOK

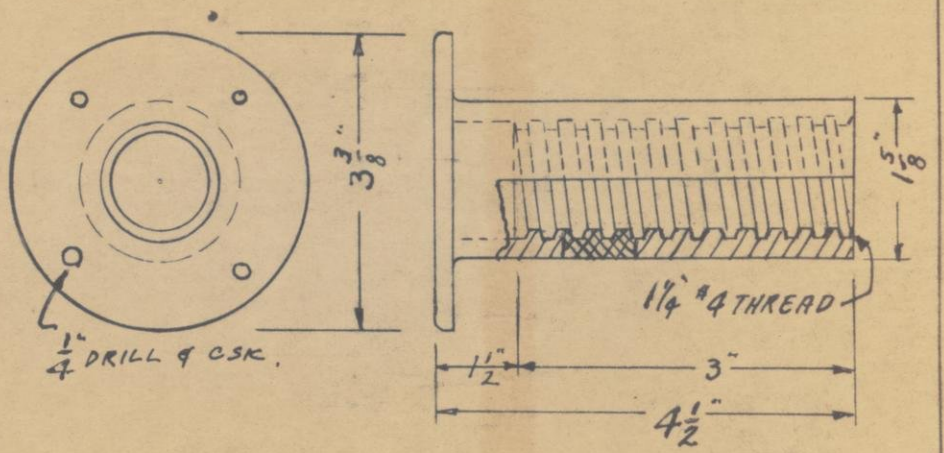

DATE- 10-17-32

SEE B. P. NO. 419 B-S

PATTERN NO. 1200

REV. FROM 3 1/8" TO 3 3/8" FLANGE OK 4-16-34

HAMILTON MFG. CO.

DO NOT REMOVE THIS LEAF FROM BOOK

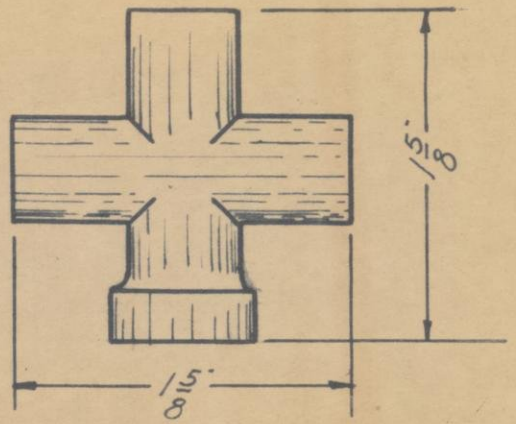

CROSS FITTING.

DATE-11.10.31 A.D.

SEE B. P. NO. 1371 M-9

PATTERN NO. 1208

HAMILTON MFG. CO.

DO NOT REMOVE THIS LEAF FROM BOOK

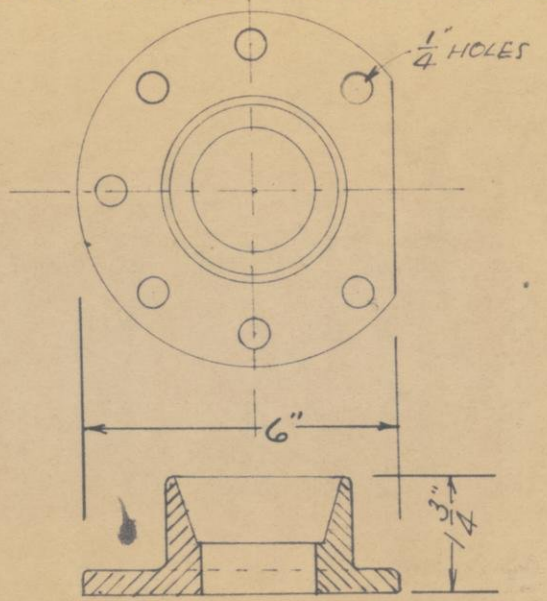

COLLAR for SUCTION PIPE

DATE-

SEE B. P. NO. 0016751-D

PATTERN NO. 1216

HAMILTON MFG. CO.

DO NOT REMOVE THIS LEAF FROM BOOK

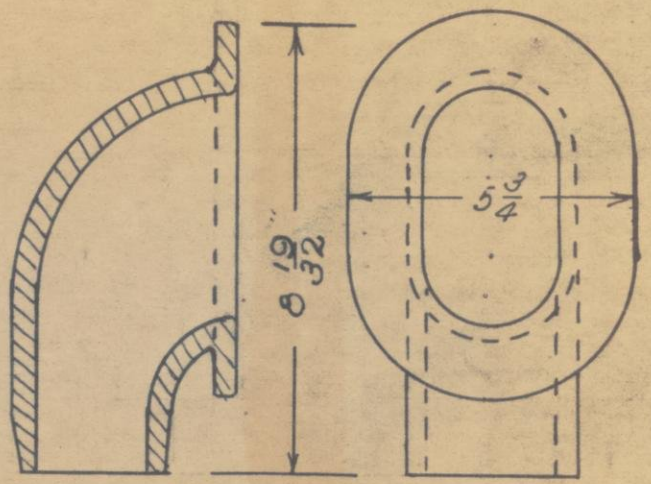

ELBOW for SUCTION PIPE

DATE-

SEE B. P. NO. 001675-D

PATTERN NO. 1217

HAMILTON MFG. CO.

DO NOT REMOVE THIS LEAF FROM BOOK

DATE- 3-7-32

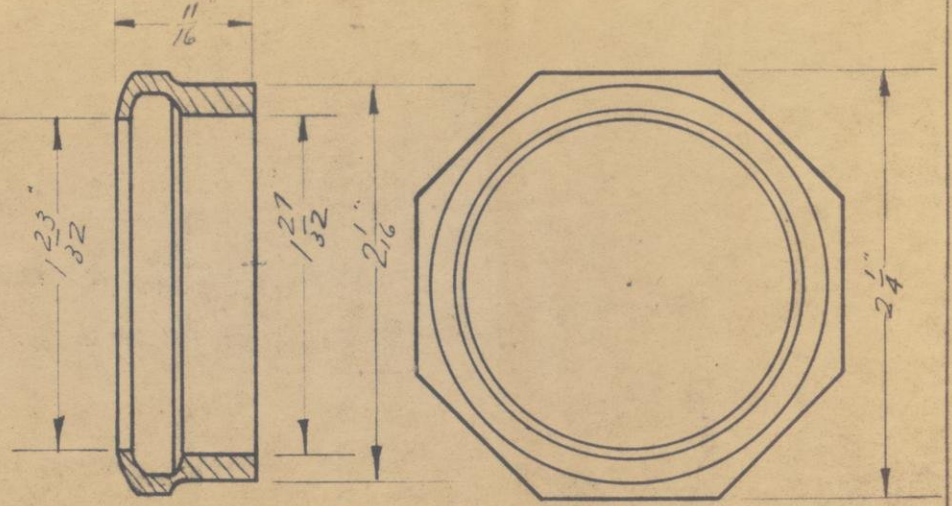

CAST BRASS OR CAST BRONZE

SPECIAL NUT FOR SOAP TANK

SEE B. P. NO. 1334-M

PATTERN NO. 1223

HAMILTON MFG. CO.

DO NOT REMOVE THIS LEAF FROM BOOK

DATE- 8-23-32

LEG FOR #27406 TABLES

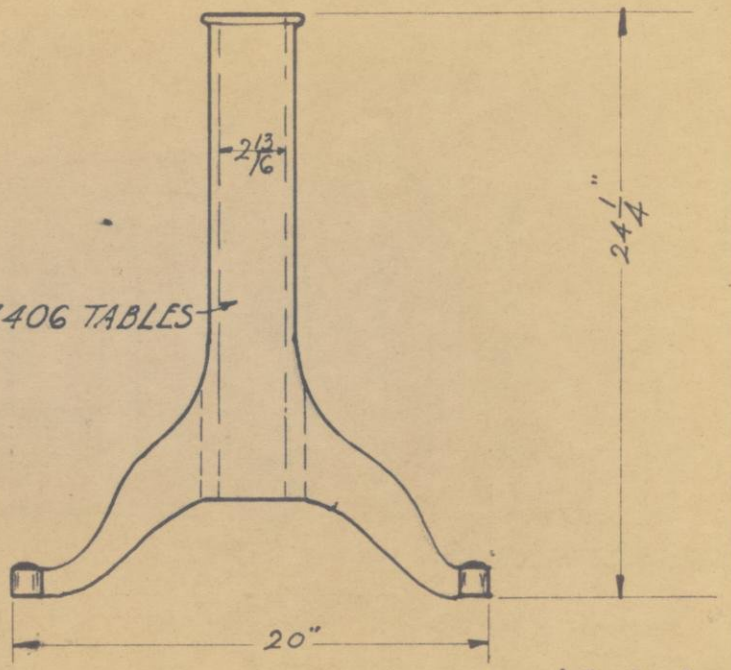

SEE B. P. NO. 565-C

PATTERN NO. 1224

HAMILTON MFG. CO.

DO NOT REMOVE THIS LEAF FROM BOOK

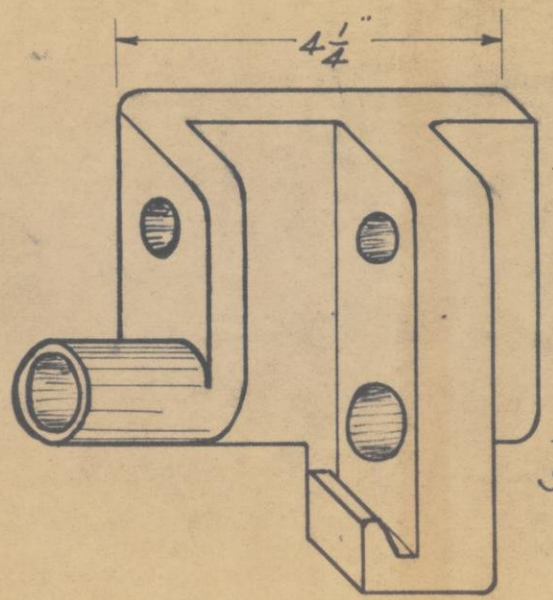

STIRRUP BRACKET

DATE-

SEE B. P. NO. 9450-60-X-W.

PATTERN NO. 1225.

HAMILTON MFG. CO.

DO NOT REMOVE THIS LEAF FROM BOOK

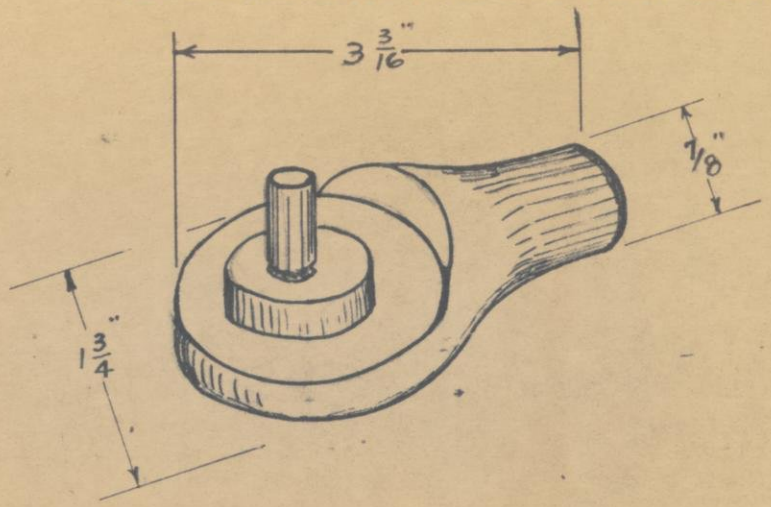

STIRRUP SOCKET

DATE-

SEE B. P. NO. 9450-60-M-W PATTERN NO. 1226.

HAMILTON MFG. CO.

DO NOT REMOVE THIS LEAF FROM BOOK

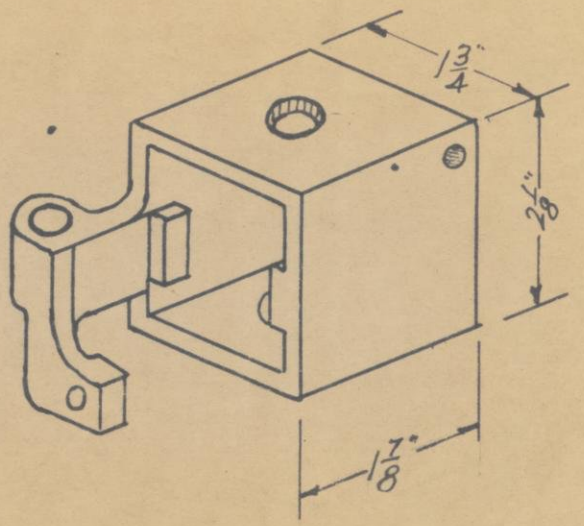

DATE.

CLAMP BOX.

SEE B. P. NO. 9500 L.W

PATTERN NO. 1231

HAMILTON MFG. CO.

DO NOT REMOVE THIS LEAF FROM BOOK

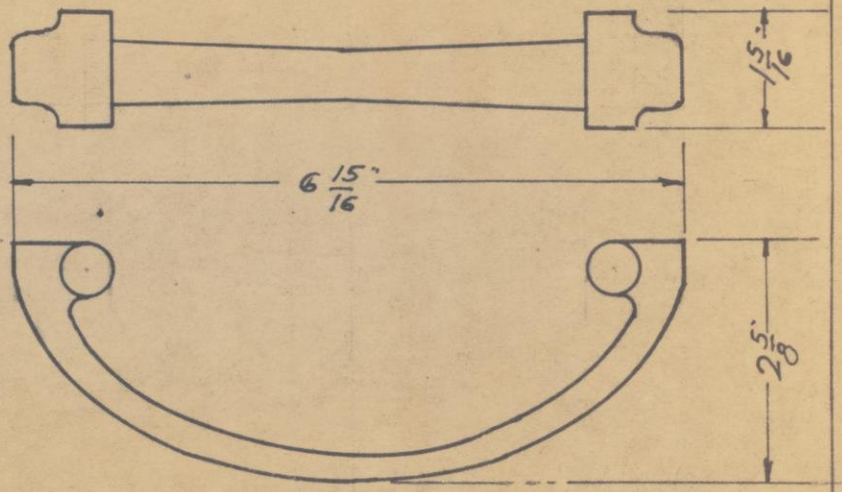

DATE-

HEAD REST BRACKET

SEE B. P. NO. 9500 EW PATTERN NO. 1232

HAMILTON MFG. CO.

DO NOT REMOVE THIS LEAF FROM BOOK

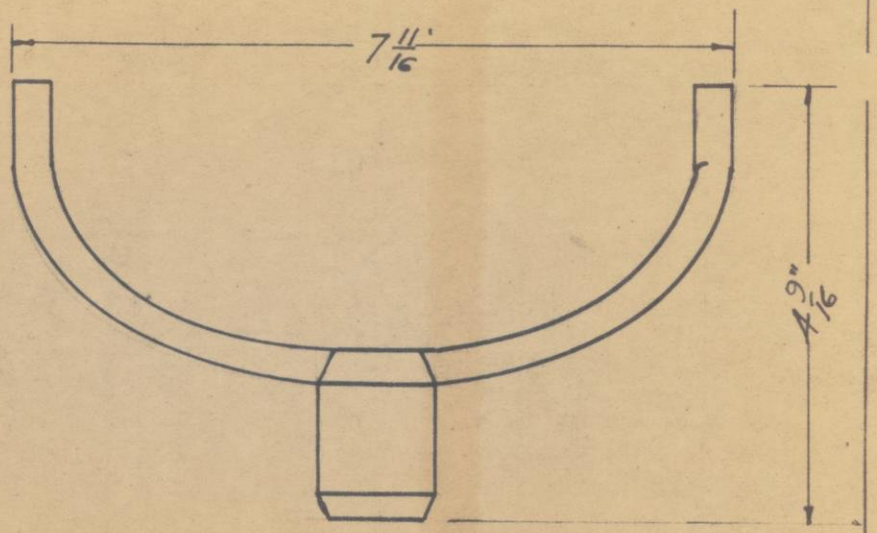

DATE-

HEAD REST SWIVEL.

SEE B. P. NO. 9500 EW PATTERN NO. 1233

HAMILTON MFG. CO.

DO NOT REMOVE THIS LEAF FROM BOOK

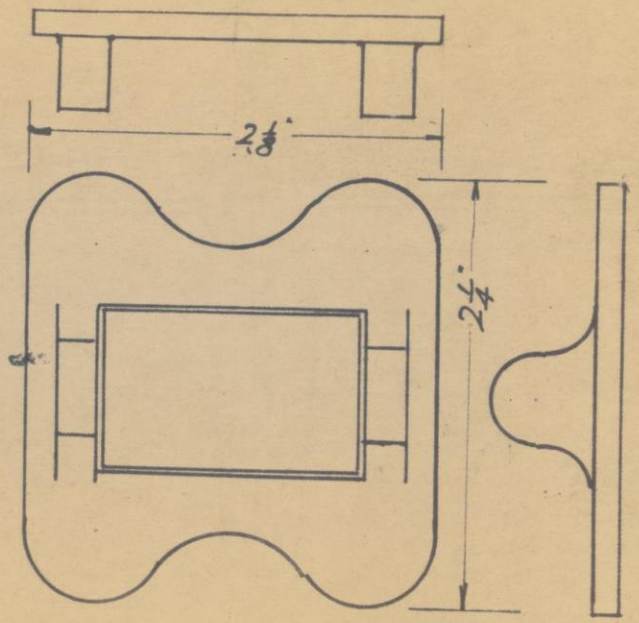

DATE-

HEAD
REST
SOCKET

SEE B. P. NO. 9500 E-W PATTERN NO. 1234

HAMILTON MFG. CO.

DO NOT REMOVE THIS LEAF FROM BOOK

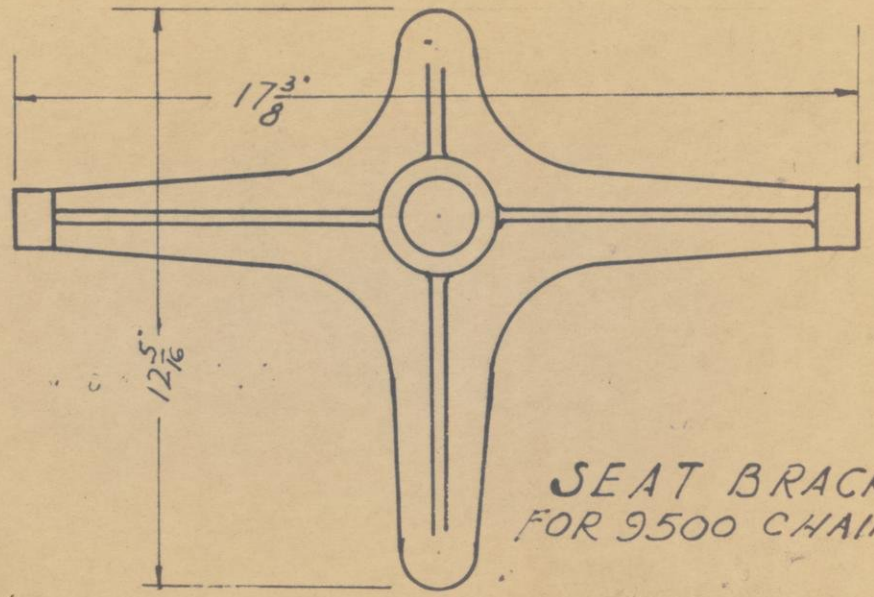

SEAT BRACKET
FOR 9500 CHAIR

DATE-

SEE B. P. NO. 9500 B.W PATTERN NO. 1235

HAMILTON MFG. CO.

DO NOT REMOVE THIS LEAF FROM BOOK

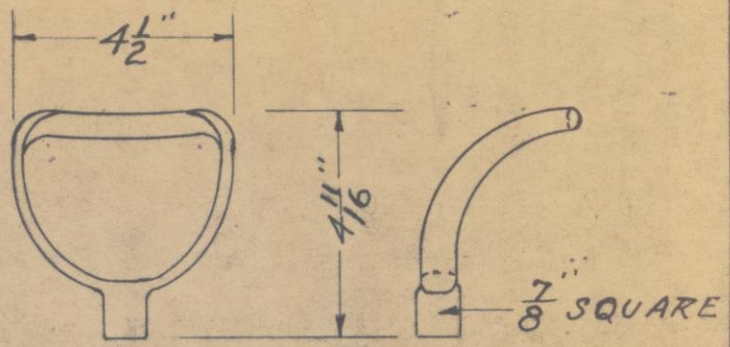

DATE- 3-28-32

STIRRUPS

MATERIAL BRASS

SEE B. P. NO. 9450-A PATTERN NO. 1236

HAMILTON MFG. CO.

DO NOT REMOVE THIS LEAF FROM BOOK

DATE. 3-29-32

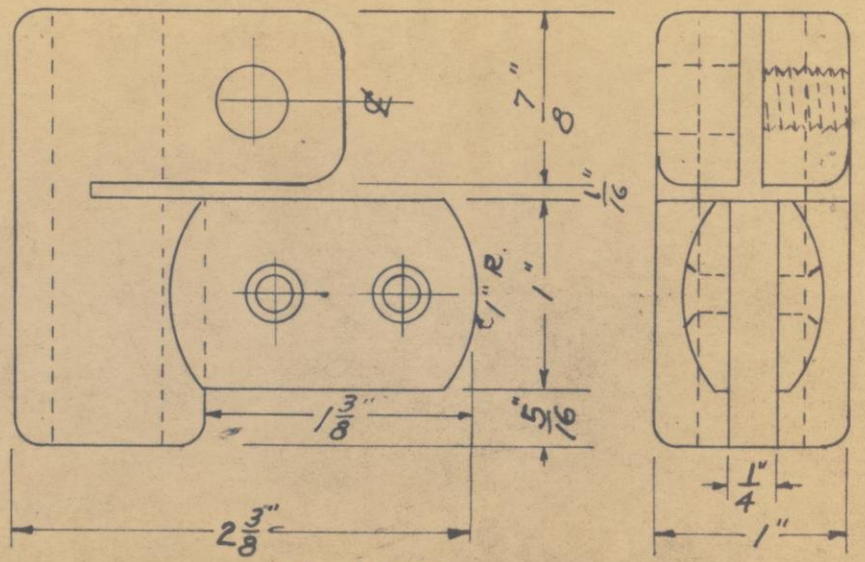

SOCKET

MATERIAL BRASS

SEE B. P. NO. 9450-A PATTERN NO. 1237

HAMILTON MFG. CO.

DO NOT REMOVE THIS LEAF FROM BOOK

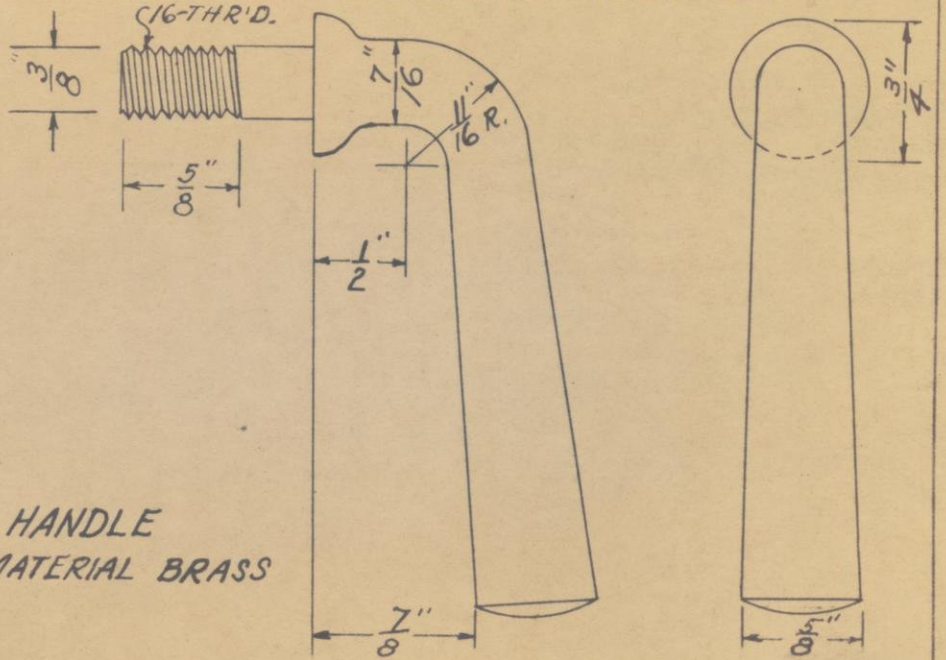

DATE: 3-29-32

HANDLE
MATERIAL BRASS

SEE B. P. NO. 9450-A

PATTERN NO. 1238

147

HAMILTON MFG. CO.

DO NOT REMOVE THIS LEAF FROM BOOK

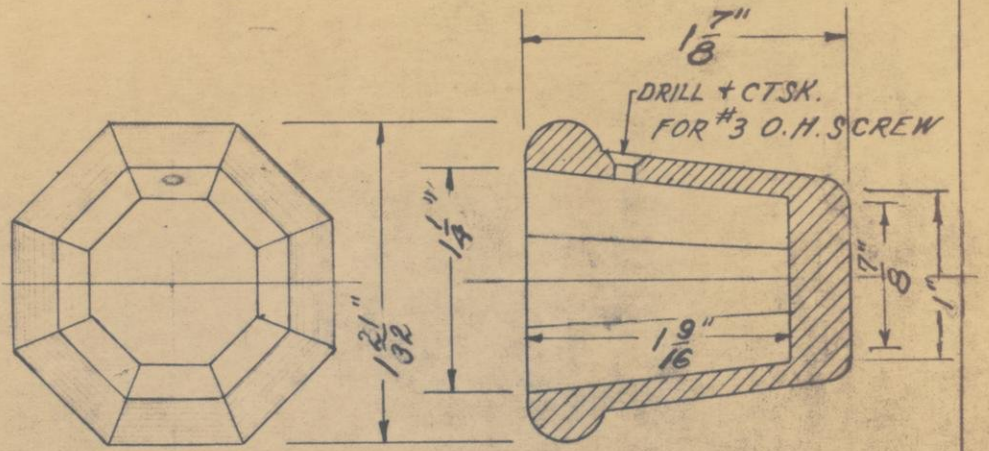

TOP VIEW

SECTIONAL VIEW

DATE. 3-29-12

CAST BRASS
SOCKET

SEE B. P. NO. 9450-A

PATTERN NO. 1239

HAMILTON MFG. CO.

DO NOT REMOVE THIS LEAF FROM BOOK

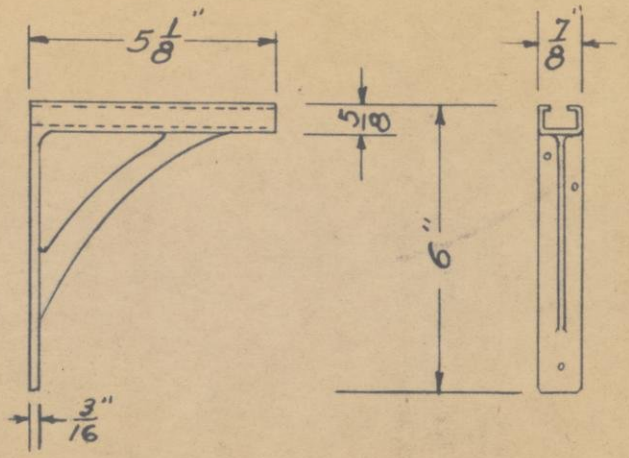

DATE. 3-29-32

STERILIZER BRACKETS

MATERIAL BRASS

SEE B. P. NO. 9530 PATTERN NO. 1240

HAMILTON MFG. CO.

DO NOT REMOVE THIS LEAF FROM BOOK

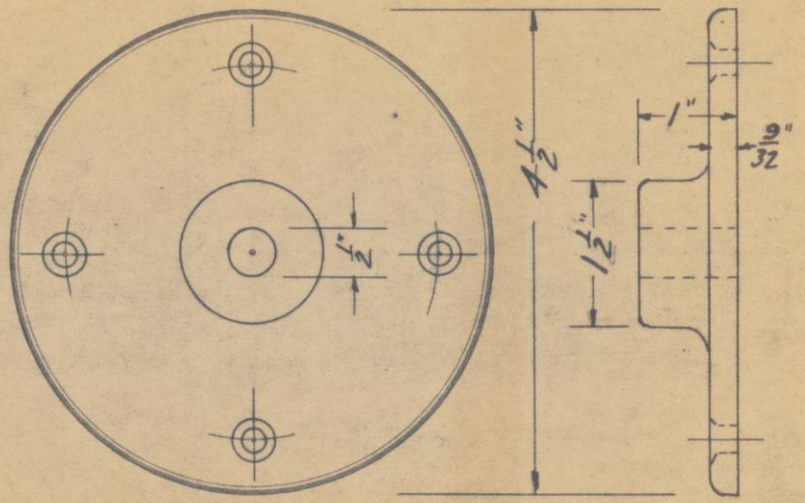

SEAT FLANGE

DATE- 3-30-32

SEE B. P. NO. 9610

PATTERN NO. 1241

HAMILTON MFG. CO.

DO NOT REMOVE THIS LEAF FROM BOOK

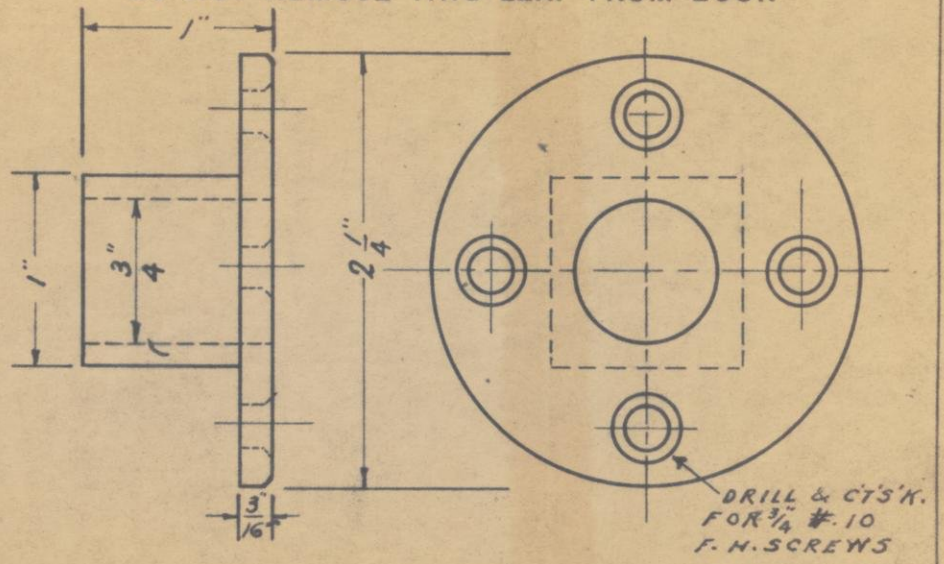

DATE- 4-1-32

BOTTOM BEARING

SEE B. P. NO. 9610

PATTERN NO. 1242

3-004

HAMILTON MFG. CO.

DO NOT REMOVE THIS LEAF FROM BOOK

DATE- REDRAWN 7-30-56 DFH

841

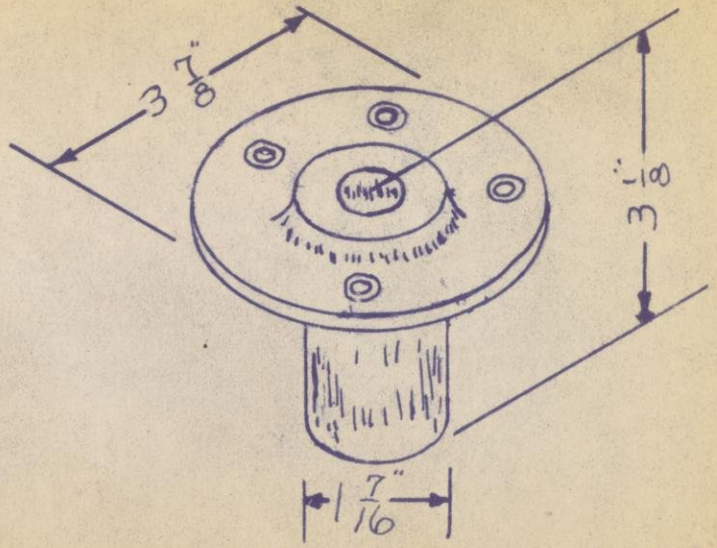

TOP BEARING

JAN 2 1957

SEE B. P. NO. 9610-XA

PATTERN NO. 1243

PLUSH NO. 120—500—7-15-53

HAMILTON MFG. CO.

DO NOT REMOVE THIS LEAF FROM BOOK

OK

DATE. 4-4-32 REVISED 5-25-32

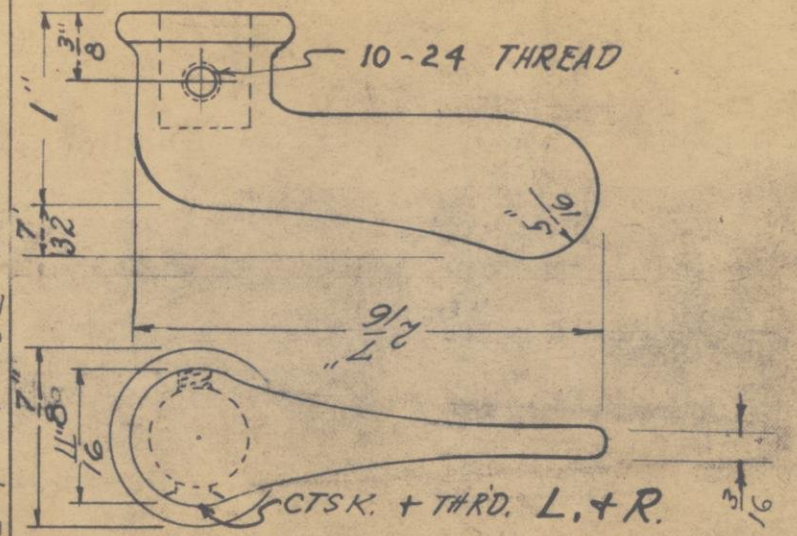

HANDLE FOR TILTING DEVICE

SEE B. P. NO. 9450-B-W 9460-XD

PATTERN NO. 1244

HAMILTON MFG. CO.

DO NOT REMOVE THIS LEAF FROM BOOK

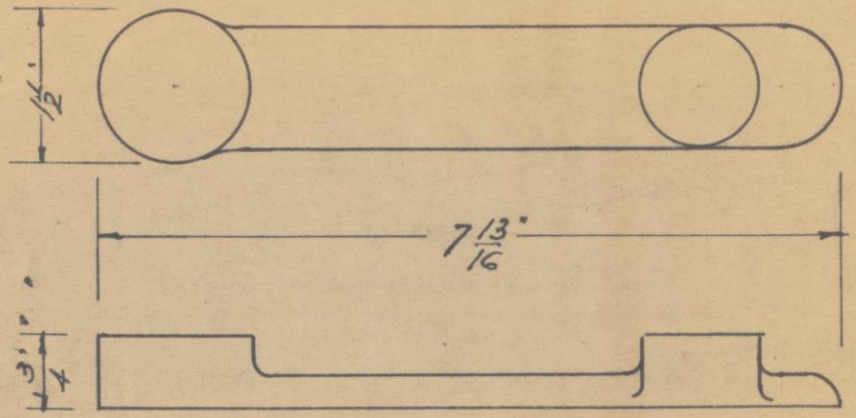

BACK PIVOT BRACKET

DATE-

SEE B. P. NO. 9500CW PATTERN NO. 1249

HAMILTON MFG. CO.

DO NOT REMOVE THIS LEAF FROM BOOK

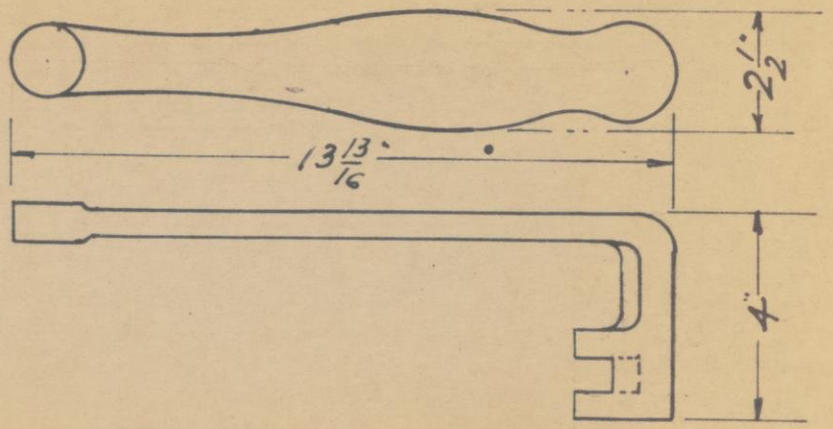

DATE-

ARM REST BRACKET

SEE B. P. NO. 9500 C W PATTERN NO. 1250

HAMILTON MFG. CO.

DO NOT REMOVE THIS LEAF FROM BOOK

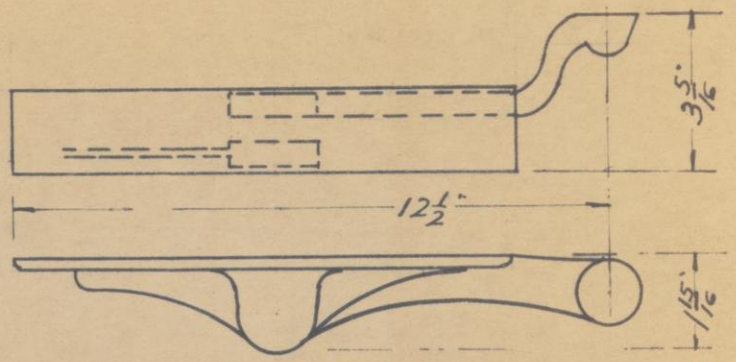

ARM REST BRACKET FOR 9500 CHAIR

LEFT & RIGHT PATTERNS

DATE-

SEE B. P. NO. 9500 CW PATTERN NO. 1251

HAMILTON MFG. CO.

DO NOT REMOVE THIS LEAF FROM BOOK

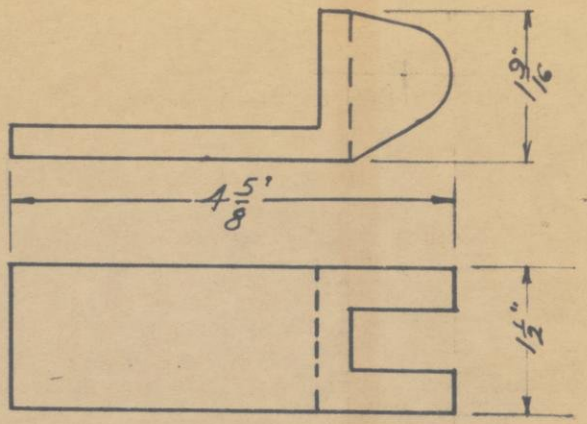

BRACKET FOR CHAIR

DATE-

SEE B. P. NO. 9500 DW PATTERN NO. 1252

HAMILTON MFG. CO.

DO NOT REMOVE THIS LEAF FROM BOOK

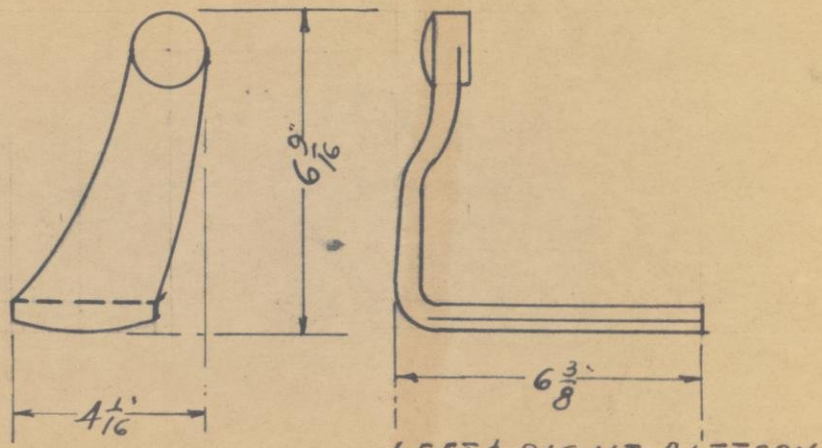

LEFT & RIGHT PATTERN

DATE-

BRACKET FOR CHAIR

SEE B. P. NO. 9500 DW

PATTERN NO. 1253

HAMILTON MFG. CO.

DO NOT REMOVE THIS LEAF FROM BOOK

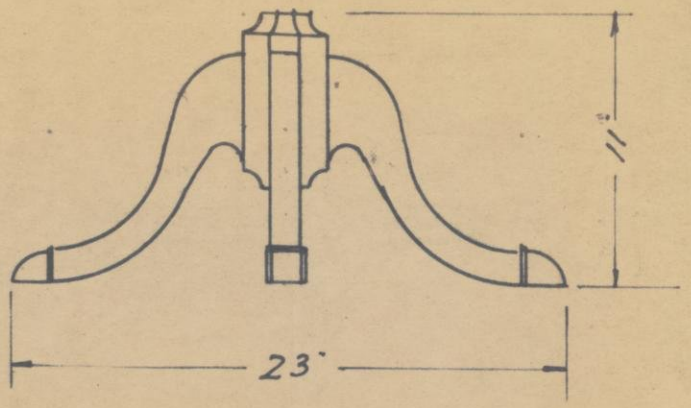

DATE-

BASE FOR SPECIALISTS CHAIR

SEE B. P. NO. 9500 A.W PATTERN NO. 1254

HAMILTON MFG. CO.

DO NOT REMOVE THIS LEAF FROM BOOK OK

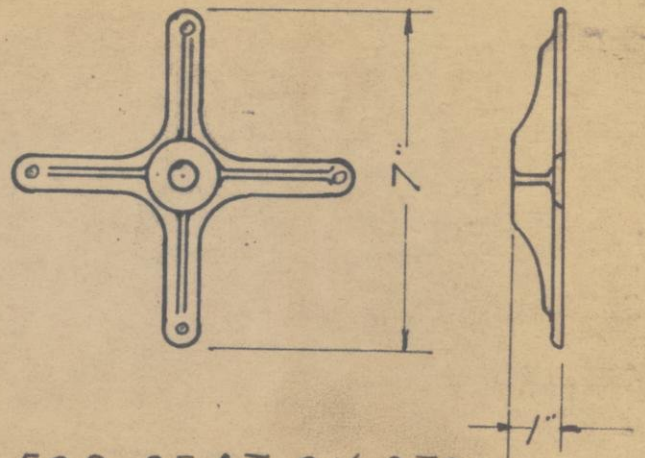

DATE-

SPIDER FOR SEAT ON STOOL

SEE B. P. NO. ~~9610-W~~ 9610-XA PATTERN NO. 1255

HAMILTON MFG. CO.

DO NOT REMOVE THIS LEAF FROM BOOK

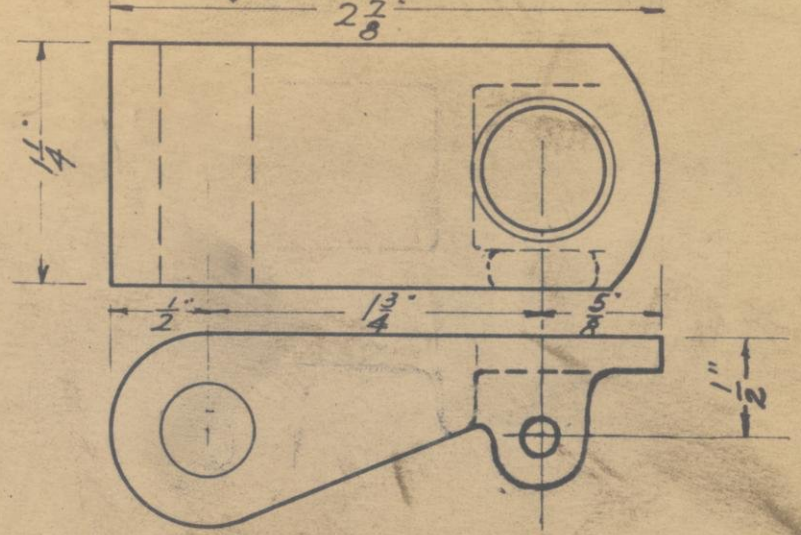

CATCH FOR ELEVATING ROD
MATERIAL CAST STEEL

SEE B. P. NO. 9460-X D PATTERN NO. 1266

(WE DRILL HOLES)

DATE-

Weight 9 oz

HAMILTON MFG. CO.

DO NOT REMOVE THIS LEAF FROM BOOK

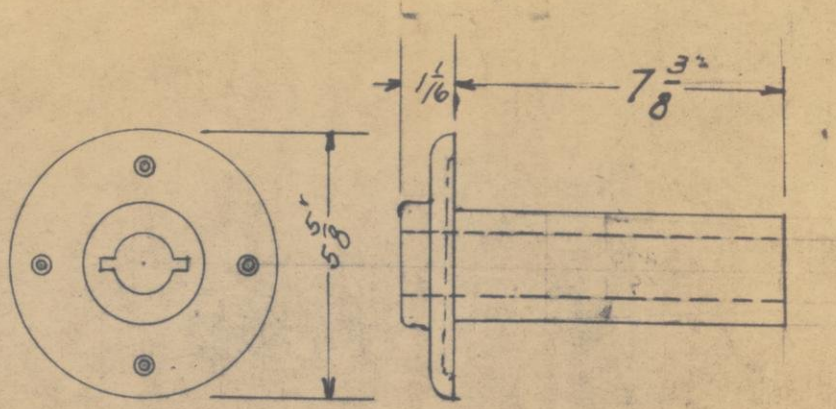

DATE-

FLANGE FOR NO. 9505 & 9500 SPECIALISTS CHAIRS

SEE B. P. NO. 9505-J-W PAT. NO. 1268.

HAMILTON MFG. CO.

DO NOT REMOVE THIS LEAF FROM BOOK

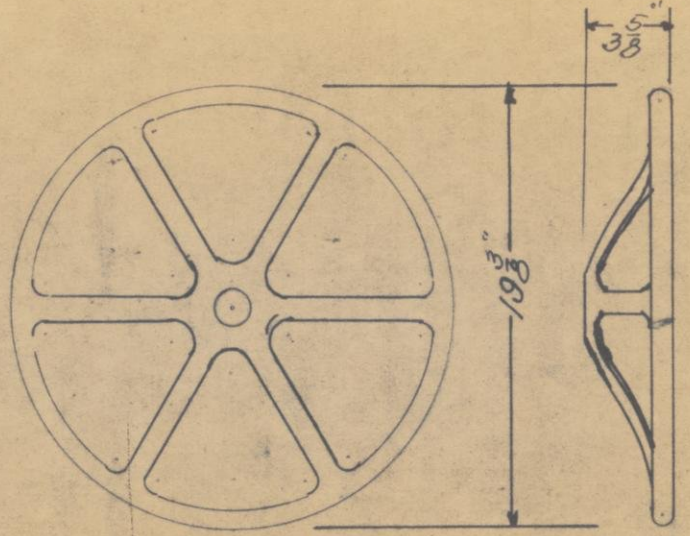

DATE-

HAND WHEEL FOR NO. 9505 & 9500
SPECIALISTS CHAIRS

SEE B. P. NO. 9505-H-W PAT. NO. 1269

HAMILTON MFG. CO.

DO NOT REMOVE THIS LEAF FROM BOOK

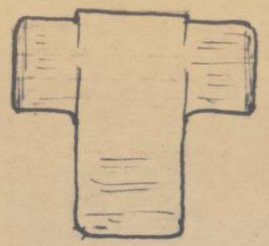

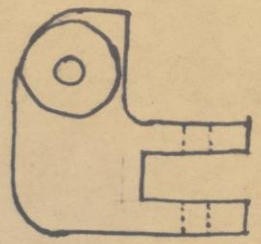

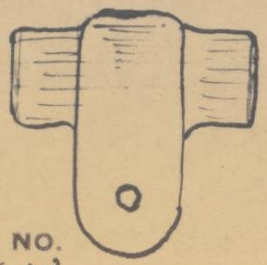

DATE-

SEE B. P. NO.
9505-X.W.

HEAD REST
HINGE
MACHINE 1 RIGHT
& 1 LEFT
PATTERN NO. 1273

HAMILTON MFG. CO.

DO NOT REMOVE THIS LEAF FROM BOOK



HEAD REST FORK
1 REQ'D BRASS

DATE-

SEE B. P. NO. 9505-X-W. PATTERN NO. 1274.

HAMILTON MFG. CO.

DO NOT REMOVE THIS LEAF FROM BOOK

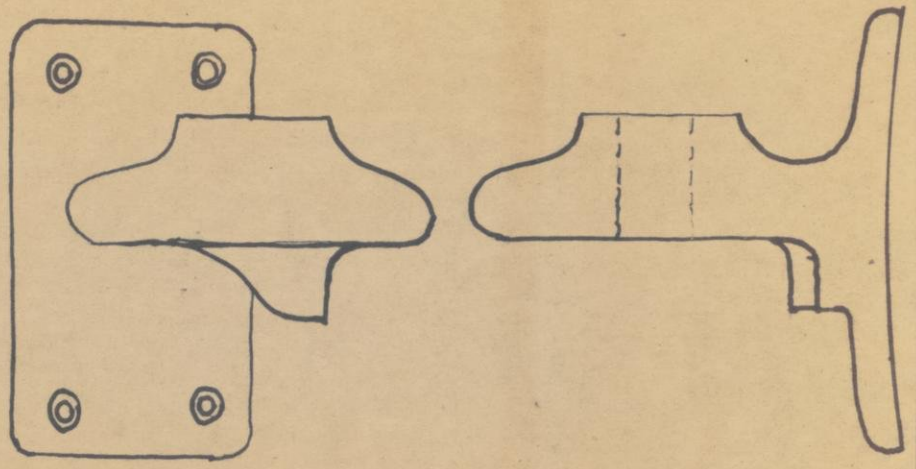

HEAD REST TILTING BKT.
1 REQ'D.

DATE.

SEE B. P. NO. 9505-X-W

PATTERN NO. 1275

HAMILTON MFG. CO.

DO NOT REMOVE THIS LEAF FROM BOOK

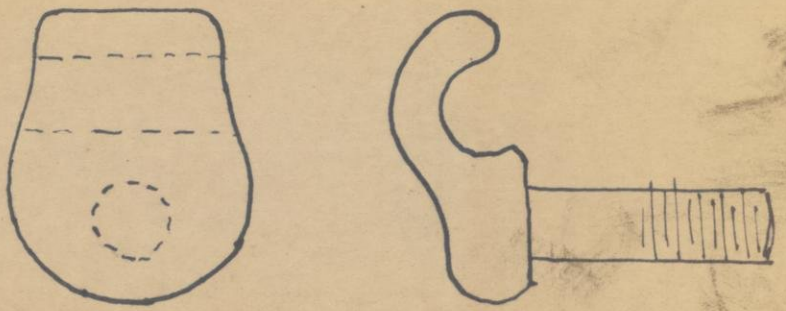

DATE-

HEAD REST CLAMP
1 REQD. BRASS

SEE B. P. NO. 9505-X W PATTERN NO. 1276

HAMILTON MFG. CO.

DO NOT REMOVE THIS LEAF FROM BOOK

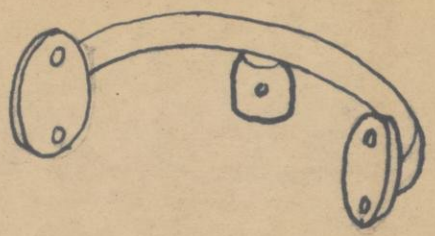

DATE-

FORK FOR STATIONARY TYPE HEAD REST

SEE B. P. NO. 9505-X.W

PATTERN NO. 1277

HAMILTON MFG. CO.

DO NOT REMOVE THIS LEAF FROM BOOK

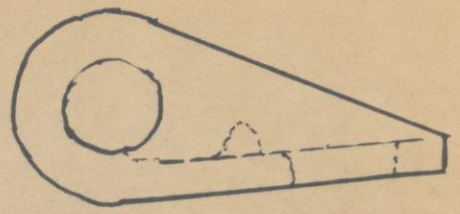

LOCKING CLAMP
1 REQ'D.

DATE-

SEE B. P. NO. 9505-C W. PATTERN NO. 1278

HAMILTON MFG. CO.

DO NOT REMOVE THIS LEAF FROM BOOK

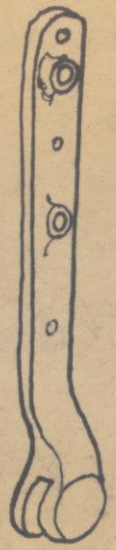

DATE-

BACK HINGE CASTING.
1 RIGHT & 1 LEFT

SEE B. P. NO. 9505-C.W. PATTERN NO. 1279.

HAMILTON MFG. CO.

DO NOT REMOVE THIS LEAF FROM BOOK

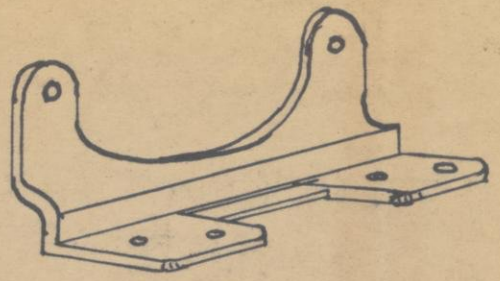

BASE HINGE CASTING.
1 RIGHT & 1 LEFT

DATE-

SEE B. P. NO. 9505-D. W. PATTERN NO. 1280.

HAMILTON MFG. CO.

DO NOT REMOVE THIS LEAF FROM BOOK



ARM BRACKET SUPPORT

1 RIGHT & 1 LEFT

DATE-

SEE B. P. NO. 9505- C.W. PATTERN NO. 1281

HAMILTON MFG. CO.

DO NOT REMOVE THIS LEAF FROM BOOK

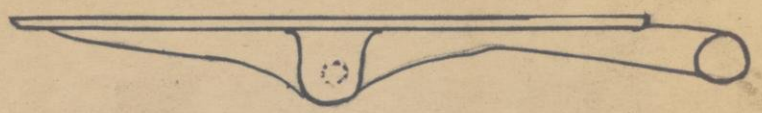

ARM REST BRACKET

1 RIGHT & 1 LEFT

DATE-

SEE B. P. NO. 9505-CW. PATTERN NO. 1282

HAMILTON MFG. CO.

DO NOT REMOVE THIS LEAF FROM BOOK

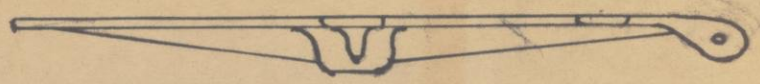

BASE

1 REQ'D.

DATE-

SEE B. P. NO. 9505-D.W. PATTERN NO. 1283

HAMILTON MFG. CO.

DO NOT REMOVE THIS LEAF FROM BOOK

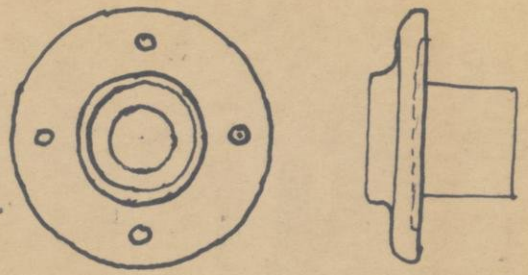

DATE-

BASE FLANGE

1 REQ'D

SEE B. P. NO. 9500-9505- F. W.

PATTERN NO. 1285

HAMILTON MFG. CO.

DO NOT REMOVE THIS LEAF FROM BOOK

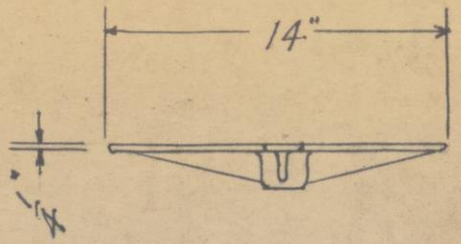

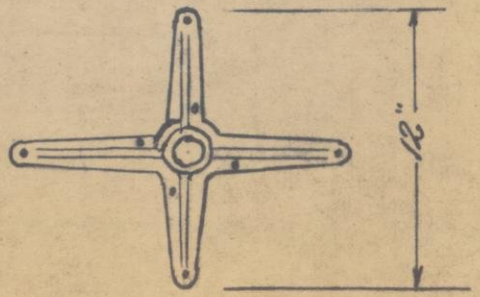

DATE-

SEE B. P. NO. 9500-D.W.

PATTERN NO. 1286

HAMILTON MFG. CO.

DO NOT REMOVE THIS LEAF FROM BOOK

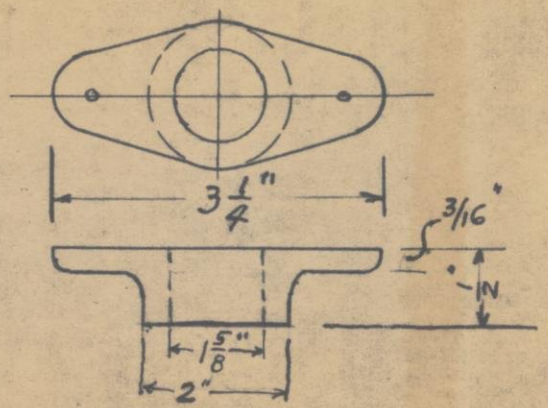

SOCKET FOR DITTO STANDS

DATE-

SEE B. P. NO. 0018336-A

PATTERN NO. 1291

HAMILTON MFG. CO.

DO NOT REMOVE THIS LEAF FROM BOOK

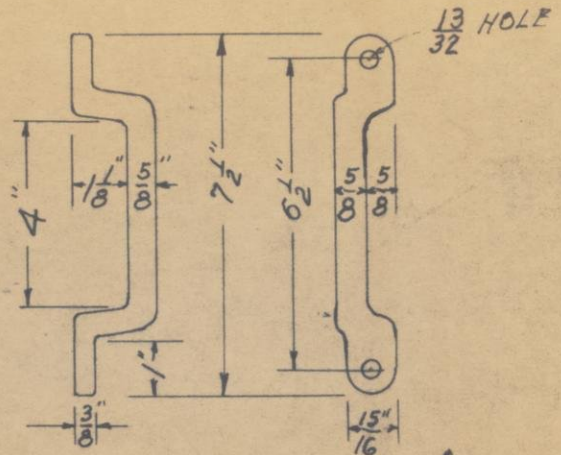

TRUCK HANDLE

MALLEABLE IRON

DATE. 1-9-33

SEE B. P. NO. 0018252 PATTERN NO. 1292

HAMILTON MFG. CO.

DO NOT REMOVE THIS LEAF FROM BOOK

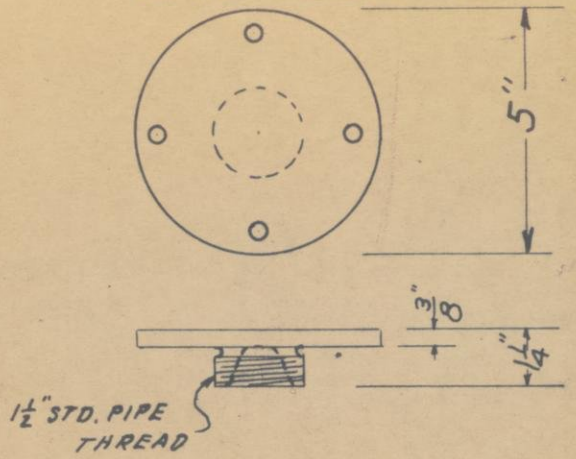

DATE- 1-12-33

FLANGE FOR #891 SOCKET

SEE B. P. NO. 567-C

PATTERN NO. 1293

HAMILTON MFG. CO.

DO NOT REMOVE THIS LEAF FROM BOOK

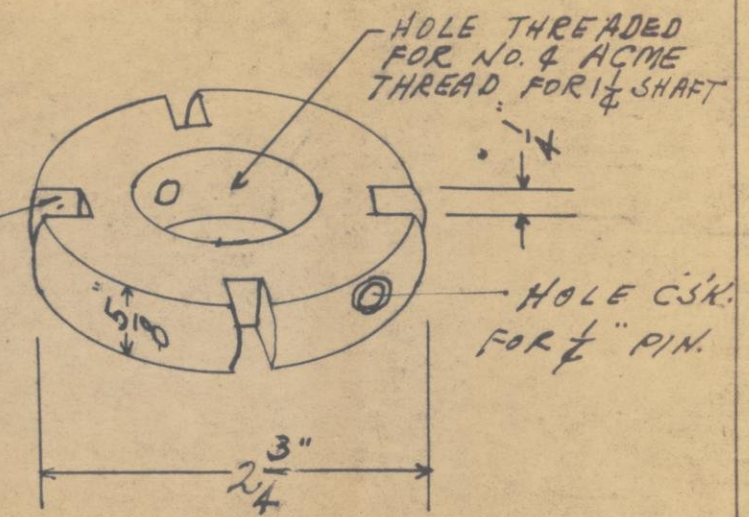

DATE- REV. 1-18-33 GRL

LOCKING COLLAR FOR LOCKING DEVICE ON 9500 & 9505 CHAIRS.

SEE B. P. NO. 9505 - M.W. PATTERN NO. 1294

HAMILTON MFG. CO.

DO NOT REMOVE THIS LEAF FROM BOOK

DATE- ORG. 1-18-33

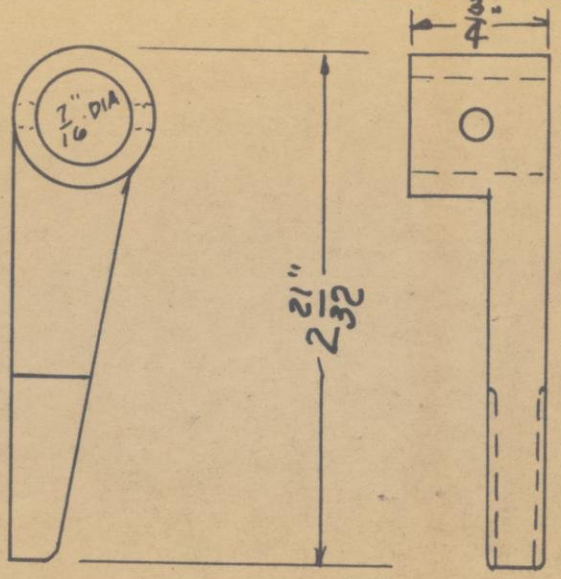

LOCK BAR (MALL. IRON)

SEE B. P. NO. 9505 MAW PATTERN NO. 1295

HAMILTON MFG. CO.

DO NOT REMOVE THIS LEAF FROM BOOK

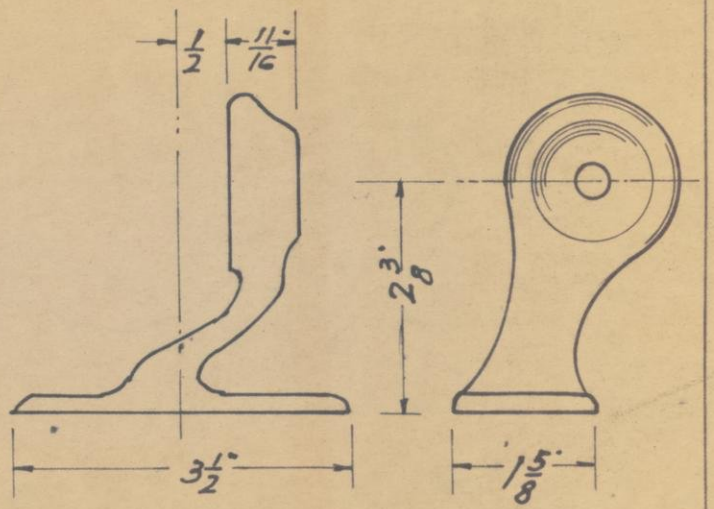

DATE-

BRACKET FOR HEAD REST

SEE B. P. NO. 9505 X W

PATTERN NO. 1296

HAMILTON MFG. CO.

DO NOT REMOVE THIS LEAF FROM BOOK

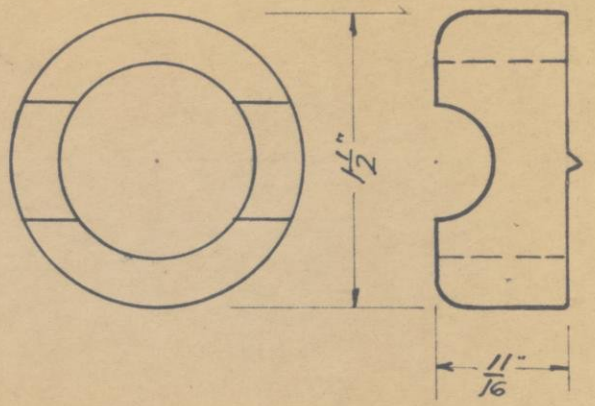

COLLAR FOR CLAMP

DATE-

SEE B. P. NO. 9505 X W

PATTERN NO. 1297

HAMILTON MFG. CO.

DO NOT REMOVE THIS LEAF FROM BOOK

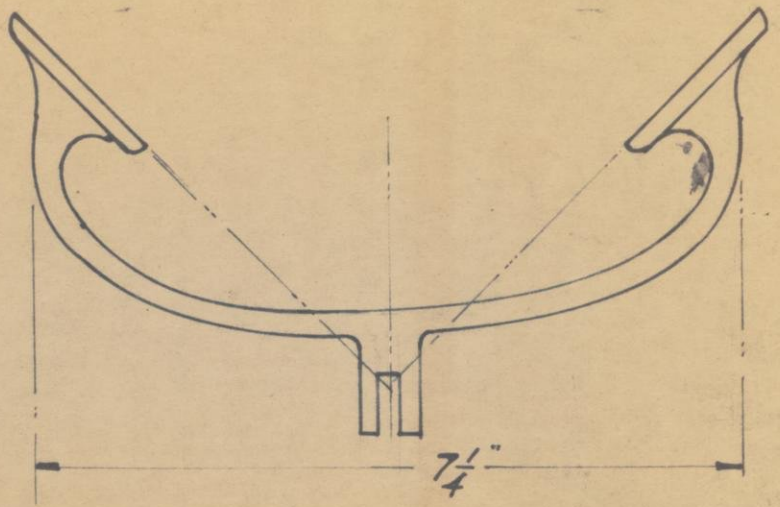

HEAD REST SUPPORT

DATE-

SEE B. P. NO. 9505 X·W

PATTERN NO. 1298

HAMILTON MFG. CO.

DO NOT REMOVE THIS LEAF FROM BOOK

DATE- GRC- 1-12-33

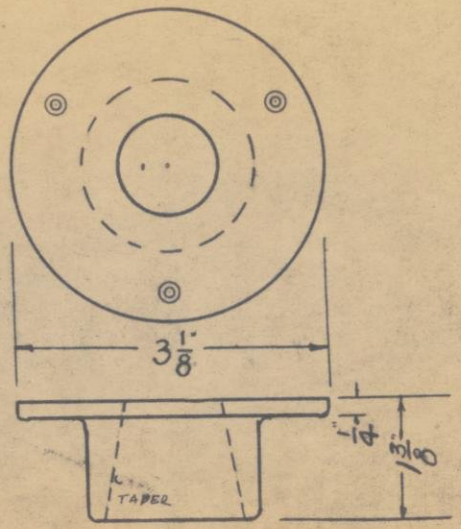

TOP BEARING FOR PRESCRIPTION CASE.
(CAST IRON)

SEE B. P. NO. 9615W

PATTERN NO. 1299

HAMILTON MFG. CO.

DO NOT REMOVE THIS LEAF FROM BOOK

DATE- 3-14-33

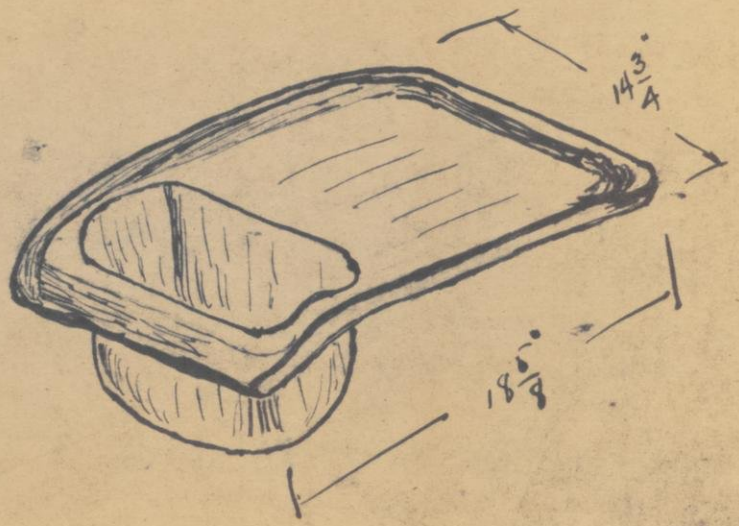

SEE B. P. NO. 9465-W

PATTERN NO. 1300

HAMILTON MFG. CO.

DO NOT REMOVE THIS LEAF FROM BOOK

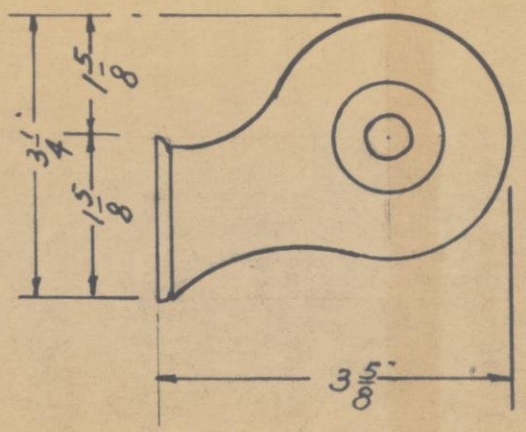

DATE-

BRACKET FOR HEAD REST.

SEE B. P. NO. 9505 X W

PATTERN NO. 1302

HAMILTON MFG. CO.

DO NOT REMOVE THIS LEAF FROM BOOK

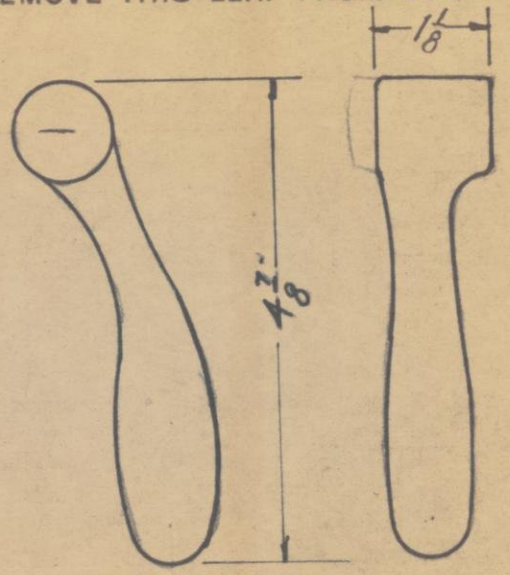

HANDLE FOR HEAD REST

DATE-

SEE B. P. NO. 9505 X W

PATTERN NO. 1303

HAMILTON MFG. CO.

DO NOT REMOVE THIS LEAF FROM BOOK

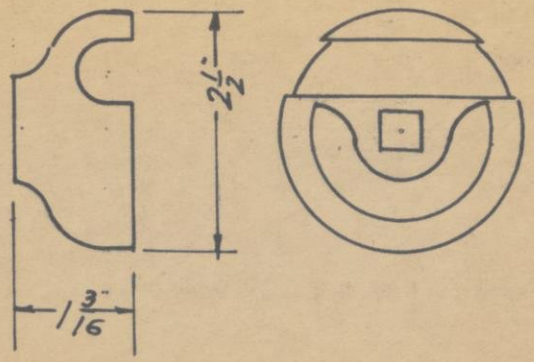

DATE-

COLLAR FOR HEAD REST

SEE B. P. NO. 9505 x W

PATTERN NO. 1304

HAMILTON MFG. CO.

DO NOT REMOVE THIS LEAF FROM BOOK

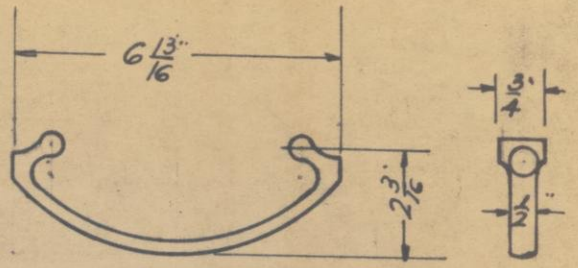

CRADLE FOR HEAD REST

DATE-

SEE B. P. NO. 9505XW PATTERN NO. 1305

HAMILTON MFG. CO.

DO NOT REMOVE THIS LEAF FROM BOOK

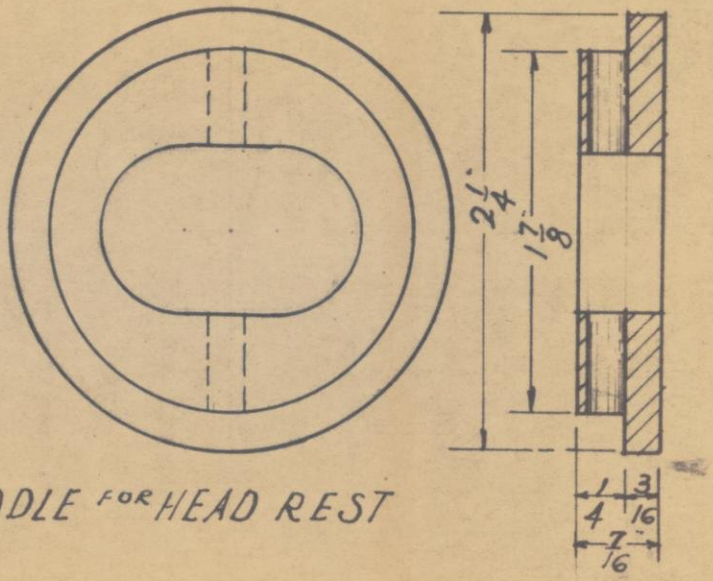

SADDLE FOR HEAD REST

DATE-

SEE B. P. NO. 9505 X-W PATTERN NO. 1306

HAMILTON MFG. CO.

DO NOT REMOVE THIS LEAF FROM BOOK

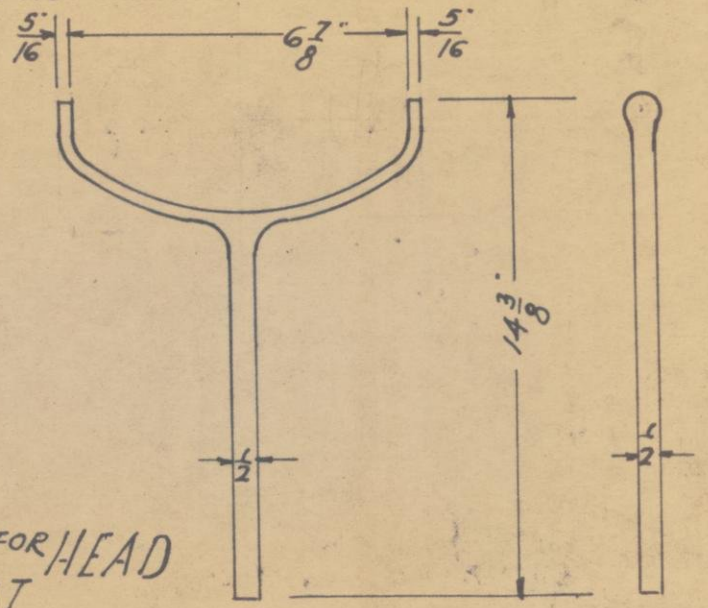

DATE-A.D. 7-17-83

FORK FOR HEAD REST

SEE B. P. NO. 9505XW

PATTERN NO. 1307

L.L. DATE- 7-13-33 - LOCK FORK FOR 9505 CHAIR

HAMILTON MFG. CO.

DO NOT REMOVE THIS LEAF FROM BOOK

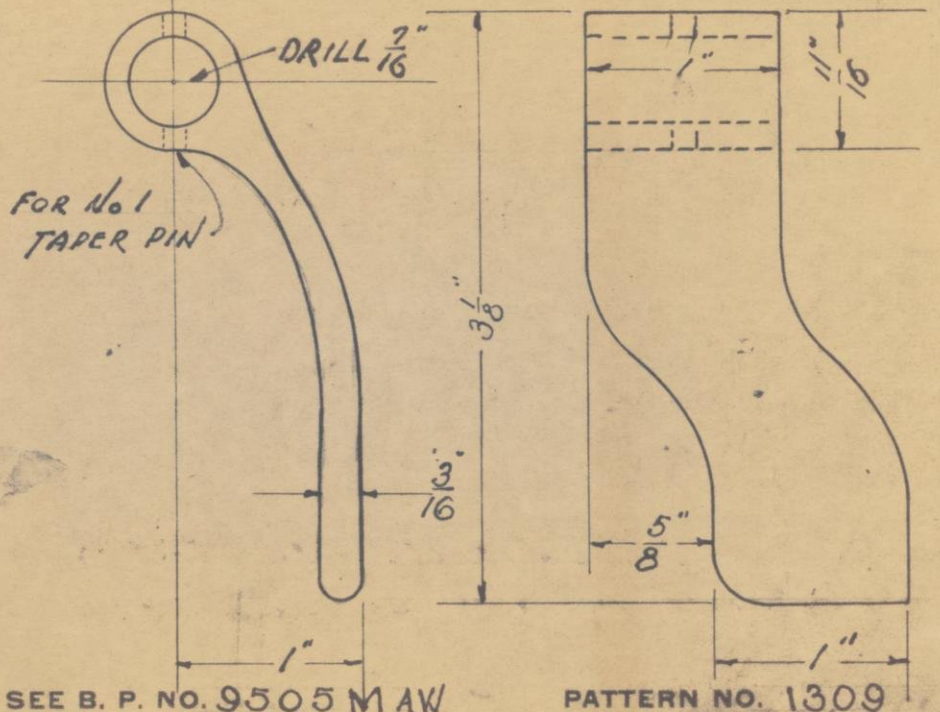

SEE B. P. NO. 9505 M AW

PATTERN NO. 1309

HAMILTON MFG. CO.

DO NOT REMOVE THIS LEAF FROM BOOK

OK

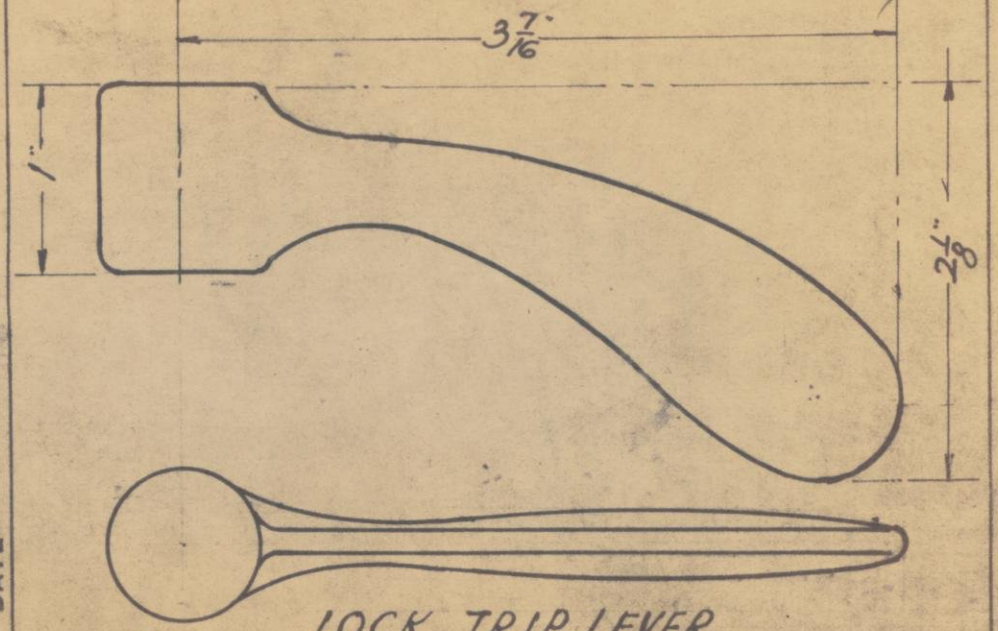

DATE-

LOCK TRIP LEVER

SEE B. P. NO. 9505 M.A.W. PATTERN NO. 1314

3

HAMILTON MFG. CO.

DO NOT REMOVE THIS LEAF FROM BOOK

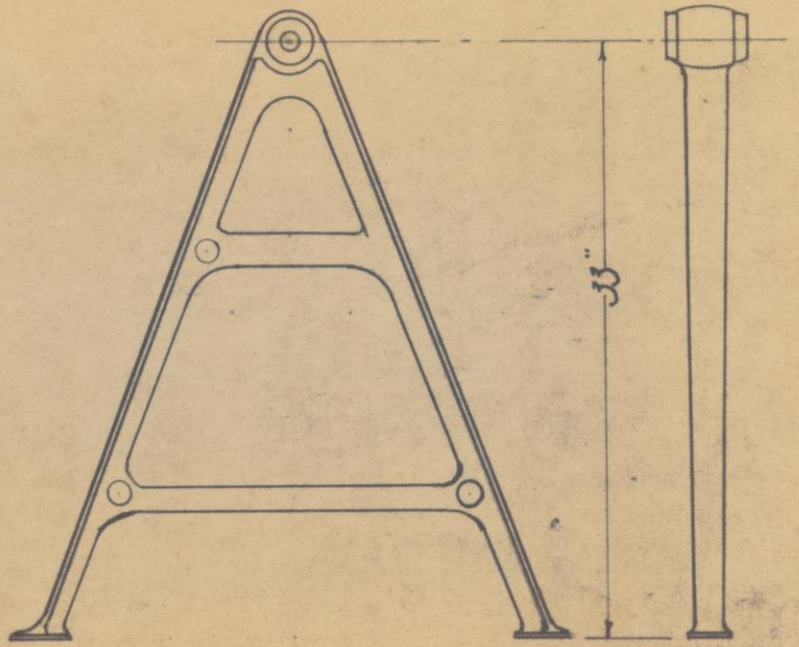

DATE- 7-2-34 - R.D.S.

SEE B. P. NO. 475-1-W

PATTERN NO. 1327-R.L.

3

HAMILTON MFG. CO.

DO NOT REMOVE THIS LEAF FROM BOOK

DATE- 6-29-34 - R.H.S.

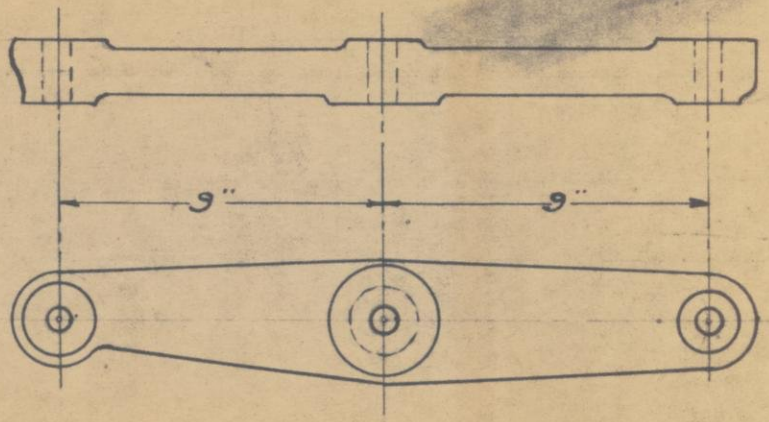

RIGHT HAND LEVER FOR #475 TABLE.

SEE B. P. NO 475-3W. PATTERN NO. 1328-R.

HAMILTON MFG. CO.

DO NOT REMOVE THIS LEAF FROM BOOK

DATE- 6-29-34 -R.A.S.

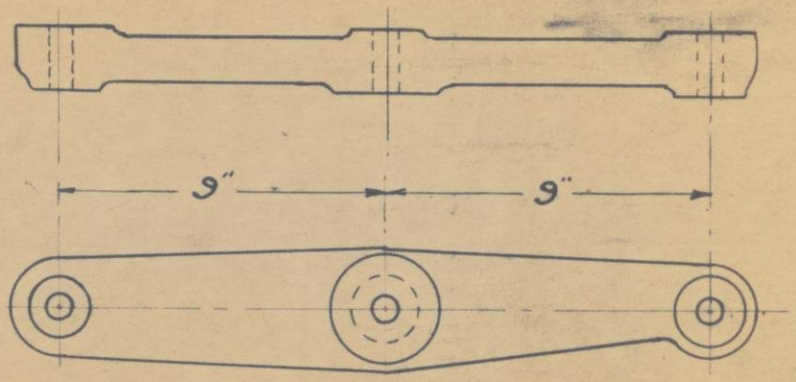

LEFT HAND LEVER FOR "475-TABLE.

SEE B. P. NO. 475-2W. PATTERN NO. 1328-L.

HAMILTON MFG. CO.

DO NOT REMOVE THIS LEAF FROM BOOK

DATE- 6-29-34 R.A.S.

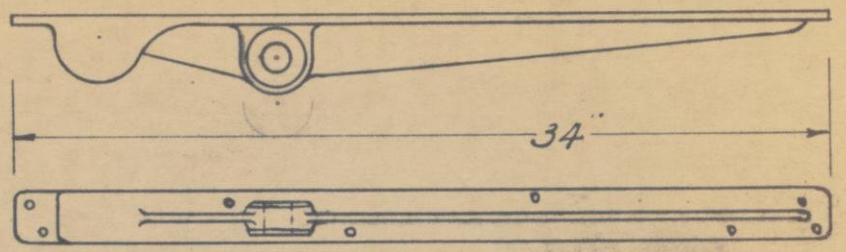

CLEATS FOR #475-TABLE

SEE B. P. NO. 475-4-W PATTERN NO. 1329

HAMILTON MFG. CO.

DO NOT REMOVE THIS LEAF FROM BOOK

DATE- 4-23-34

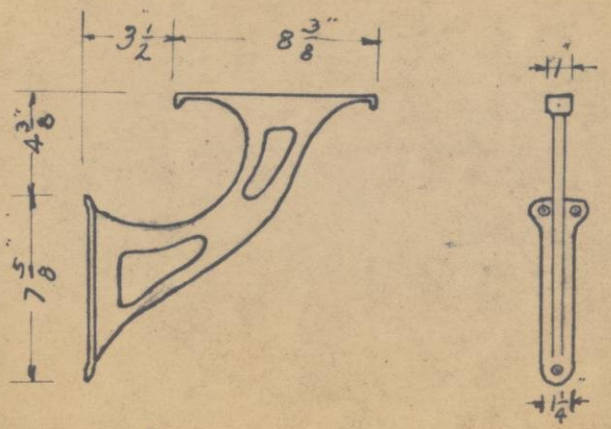

STERILIZER BRACKET

SEE B. P. NO. 9530-A-W PATTERN NO. 1330

HAMILTON MFG. CO.

DO NOT REMOVE THIS LEAF FROM BOOK

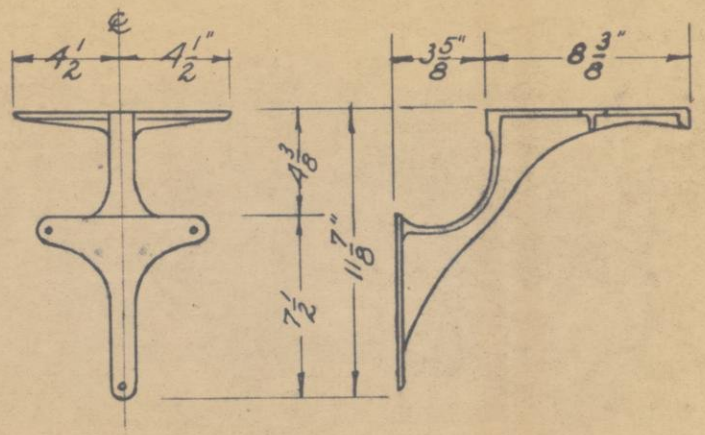

DATE- 5-17-34 G.B.

STERILIZER BRACKET

SEE B. P. NO. 9530A-W PATTERN NO. 1334

HAMILTON MFG. CO.

DO NOT REMOVE THIS LEAF FROM BOOK

Sated Pat
4 on hats

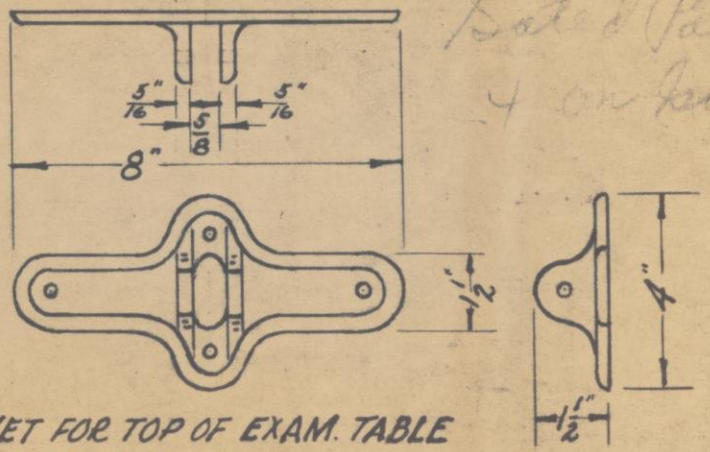

DATE- G.B. 5-24-84

BRACKET FOR TOP OF EXAM. TABLE
MALLEABLE IRON

SEE B. P. NO. 0019011

PATTERN NO. 1335

HAMILTON MFG. CO.

DO NOT REMOVE THIS LEAF FROM BOOK

DATE- 5-23-34 G.B.

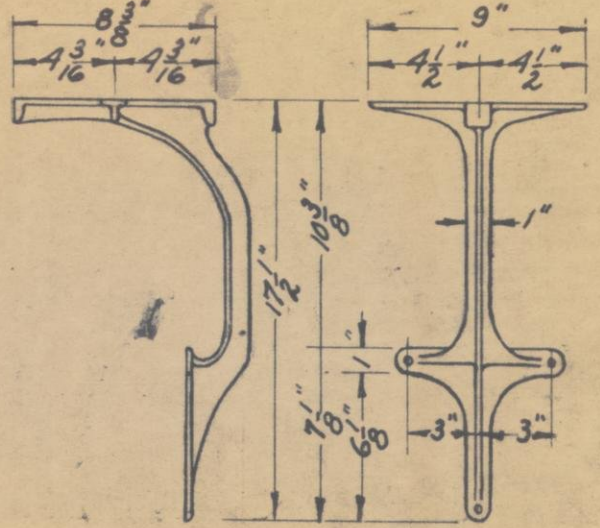

STERILIZER BRACKET

SEE B. P. NO. 9541-A

PATTERN NO. 1336

HAMILTON MFG. CO.

DO NOT REMOVE THIS LEAF FROM BOOK

DATE- 11-21-34 KSB.

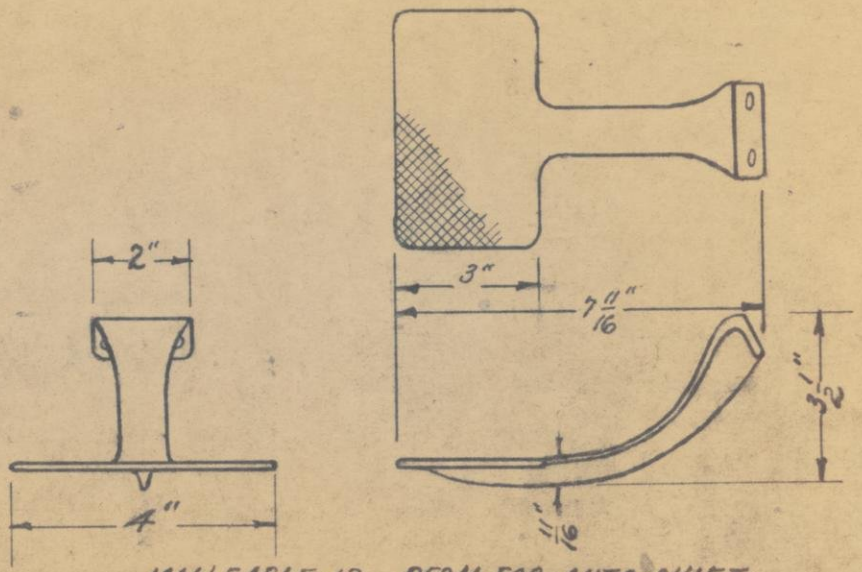

MALLEABLE IR. PEDAL FOR AUTO-SHIFT

SEE B. P. NO 0019079-H PATTERN NO. 1337

HAMILTON MFG. CO.

DO NOT REMOVE THIS LEAF FROM BOOK

NO DRAWING

DATE-

SEE B. P. NO.

PATTERN NO. 1341

HAMILTON MFG. CO.

DO NOT REMOVE THIS LEAF FROM BOOK

DATE- 4

NO DRAWING

SEE B. P. NO.

PATTERN NO. 1343

HAMILTON MFG. CO.

DO NOT REMOVE THIS LEAF FROM BOOK

BLUEPRINT DESTROYED

B.P. No. 8838-WA

DATE-

SEE B. P. NO.

PATTERN NO. 1344

HAMILTON MFG. CO.

DO NOT REMOVE THIS LEAF FROM BOOK

DATE- 8-20-34 (1-24-57)

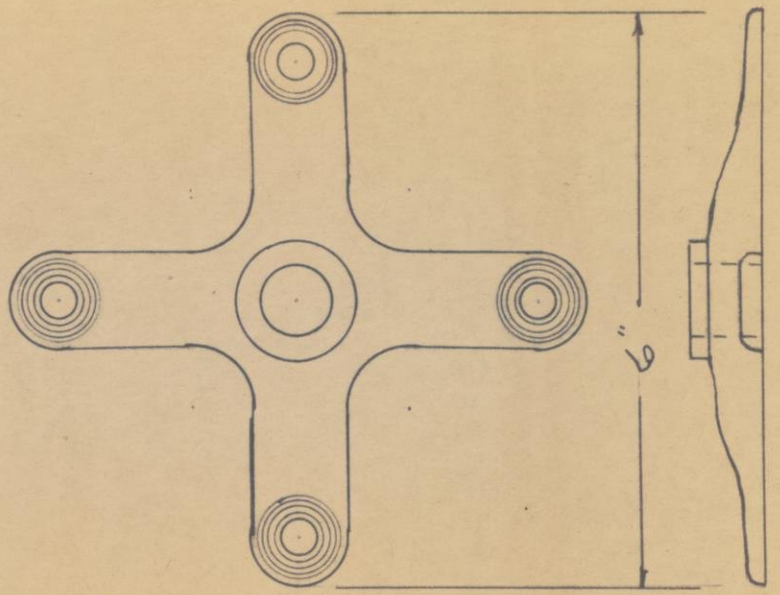

SPIDER FOR SET-EZY STOOL

MALLEABLE IRON

SEE B. P. NO. 421XE

PATTERN NO. 1345

HAMILTON MFG. CO.

DO NOT REMOVE THIS LEAF FROM BOOK

BLUEPRINT DESTROYED

DATE-

SEE B. P. NO. 28432-3 PATTERN NO. 1346

HAMILTON MFG. CO.

DO NOT REMOVE THIS LEAF FROM BOOK

BLUEPRINT DESTROYED

DATE-

SEE B. P. NO. 28432-3

PATTERN NO. 1347

HAMILTON MFG. CO.

DO NOT REMOVE THIS LEAF FROM BOOK

DATE-

BLUEPRINT DESTROYED

SEE B. P. NO. 28432-2 PATTERN NO. 1348

HAMILTON MFG. CO.

DO NOT REMOVE THIS LEAF FROM BOOK

BLUEPRINT DESTROYED

DATE-

SEE B. P. NO. 28432-2 PATTERN NO. 1349

HAMILTON MFG. CO.

DO NOT REMOVE THIS LEAF FROM BOOK

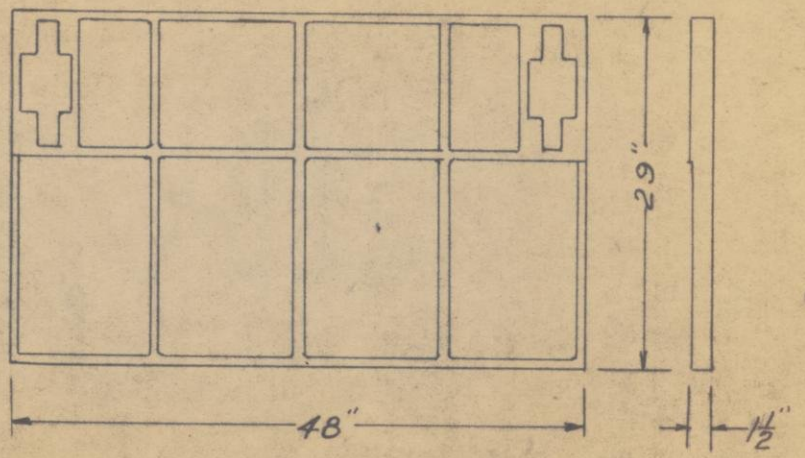

C. I. TOP FOR ELEVATING TABLE

DATE- 10-19-34

SEE B. P. NO. 0017077-A PATTERN NO. 1351

1674

HAMILTON MFG. CO.

DO NOT REMOVE THIS LEAF FROM BOOK

DATE- 9E.8 7-15-35

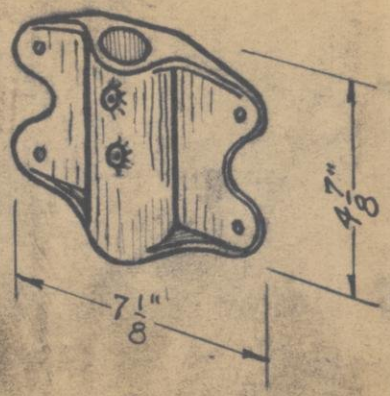

BRACKET FOR ADMAN TOP CAST IRON

SEE B. P. NO. 569-C PATTERN NO. 1369

HAMILTON MFG. CO.

DO NOT REMOVE THIS LEAF FROM BOOK

NO PATTERN CARD

DATE-

SEE B. P. NO.

PATTERN NO. 1371

HAMILTON MFG. CO.

DO NOT REMOVE THIS LEAF FROM BOOK

DATE- 6-1435 GEB

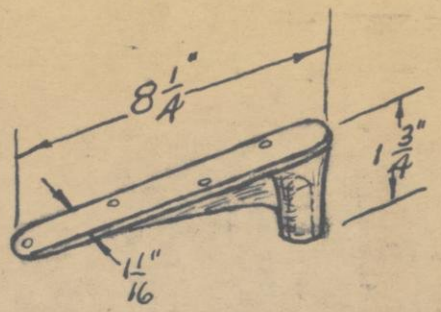

ARM BRACKET FOR 9502 CHAIR

CAST IRON

SEE B. P. NO. 9502

PATTERN NO. 1372

HAMILTON MFG. CO.

DO NOT REMOVE THIS LEAF FROM BOOK

DATE- 6-14-35 G.E.B.

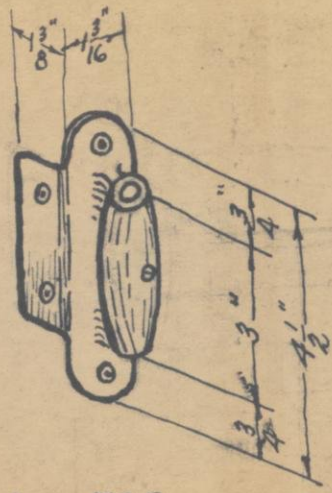

SOCKET FOR
ARM REST of NO. 9502 CHAIR

SEE B. P. NO. 9502

PATTERN NO. 1373

HAMILTON MFG. CO.

DO NOT REMOVE THIS LEAF FROM BOOK

NO DRAWING

DATE-

SEE B. P. NO.

PATTERN NO. 1374

HAMILTON MFG. CO.

DO NOT REMOVE THIS LEAF FROM BOOK

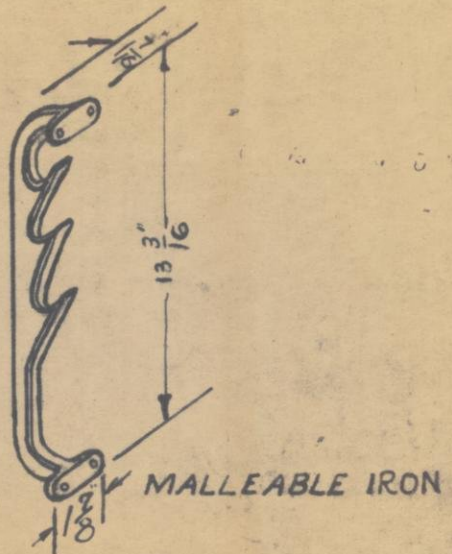

RATCHET

SEE B. P. NO. 9468-X-5 PATTERN NO. 1382

DATE- 8-21-35 LCB.

1/16

HAMILTON MFG. CO.

DO NOT REMOVE THIS LEAF FROM BOOK

FOR 2"x2" LEG

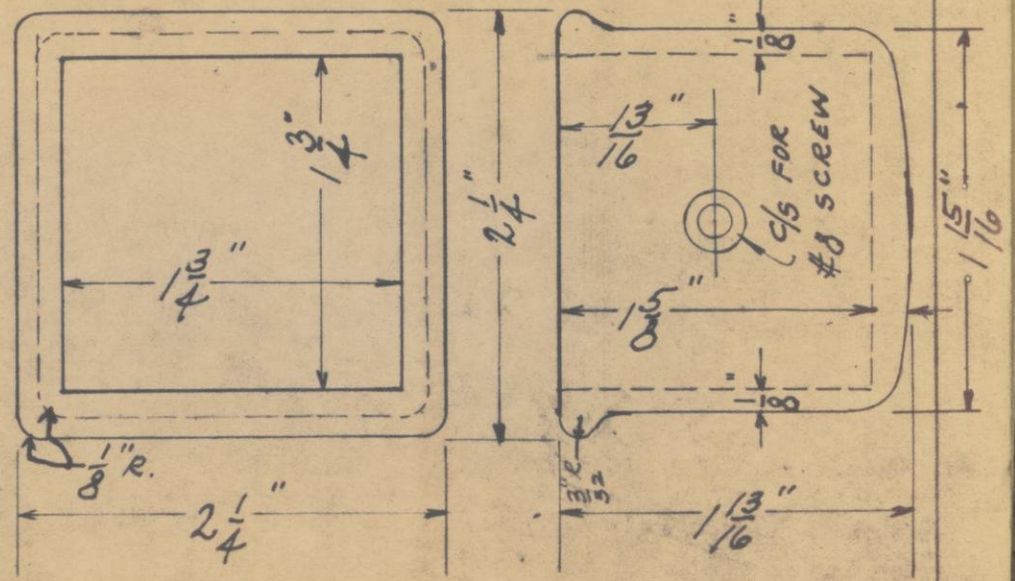

DATE- 12-4-36.

SEE B. P. NO.

PATTERN NO. 1383

LIBRARY SHOE

HAMILTON MFG. CO.

DO NOT REMOVE THIS LEAF FROM BOOK

FOR 2 1/2 x 2 1/2 POSTS

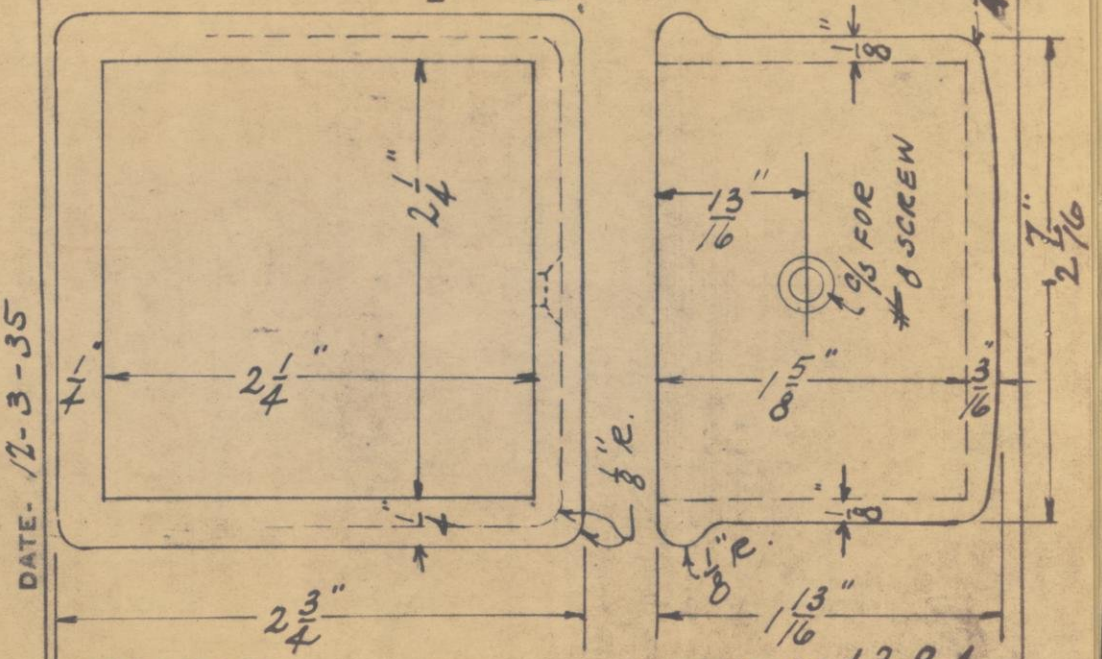

DATE- 12-3-35

SEE B. P. NO.

PATTERN NO. 1384

LIBRARY SHOE

HAMILTON MFG. CO.

DO NOT REMOVE THIS LEAF FROM BOOK

FOR $1\frac{3}{4}$ X $1\frac{3}{4}$ LEGS.

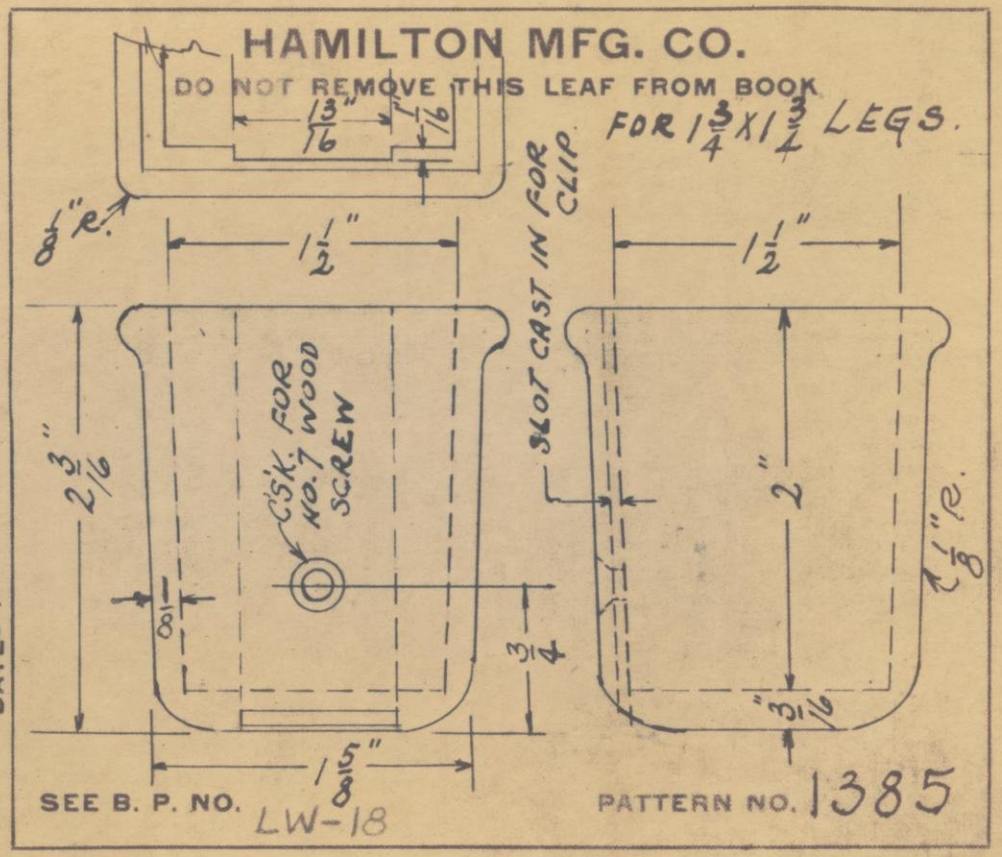

DATE- 12-3-85

SEE B. P. NO. LW-18

PATTERN NO. 1385

HAMILTON MFG. CO.

DO NOT REMOVE THIS LEAF FROM BOOK

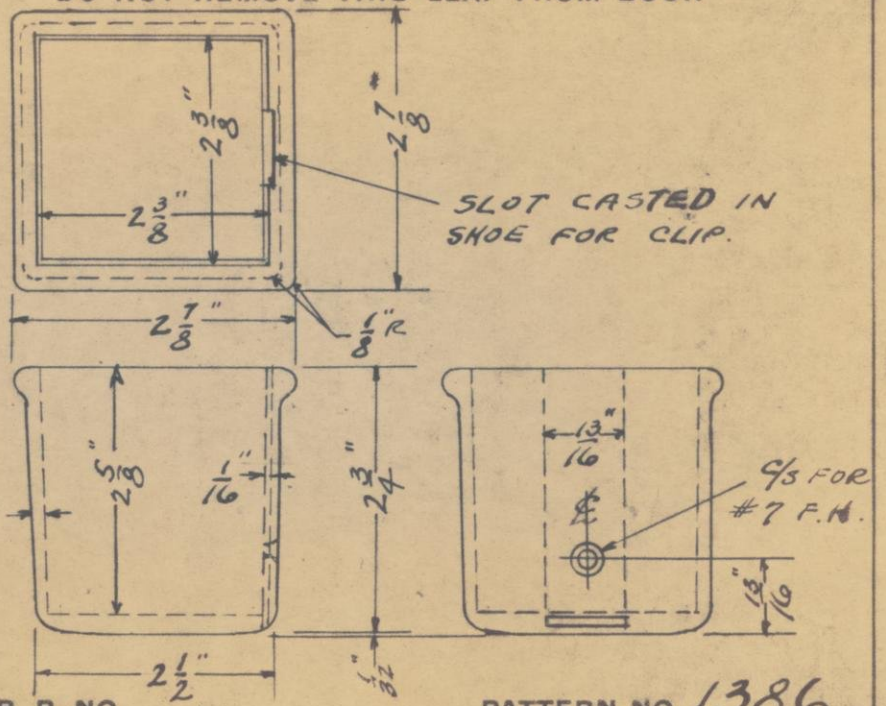

DATE- 12-4-35

SEE B. P. NO.

PATTERN NO. 1386

FOR 2 5/8" x 2 5/8" LEG.

HAMILTON MFG. CO.

DO NOT REMOVE THIS LEAF FROM BOOK

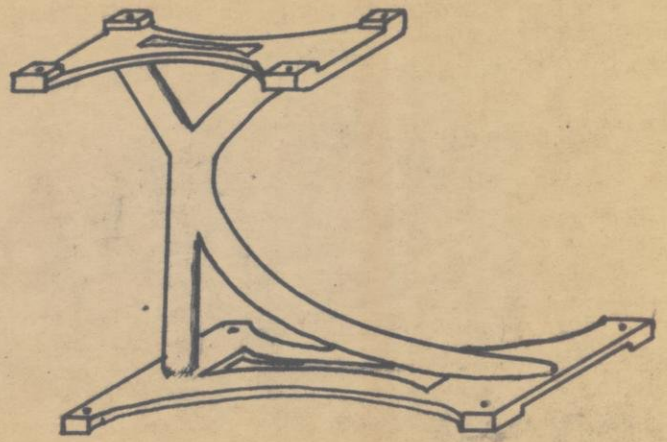

DATE-

BASE FOR IRONING BOARD

SEE B. P. NO. L-8800 PATTERN NO. 1389

HAMILTON MFG. CO.

DO NOT REMOVE THIS LEAF FROM BOOK

DATE- 6-3-35 G.B.

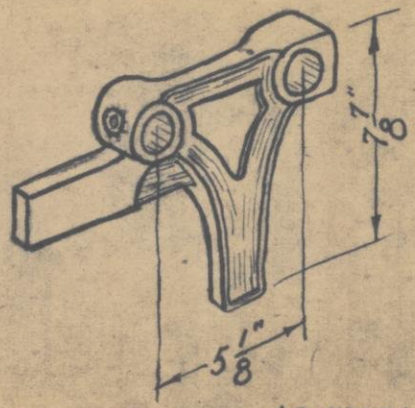

CAST IRON - ADJUSTABLE FOOT REST FOR NO. 19062 ENGINEERING DESK

SEE B. P. NO. 19062 X-E PATTERN NO. 1390

HAMILTON MFG. CO.

DO NOT REMOVE THIS LEAF FROM BOOK

DATE- Feb 11-27-35

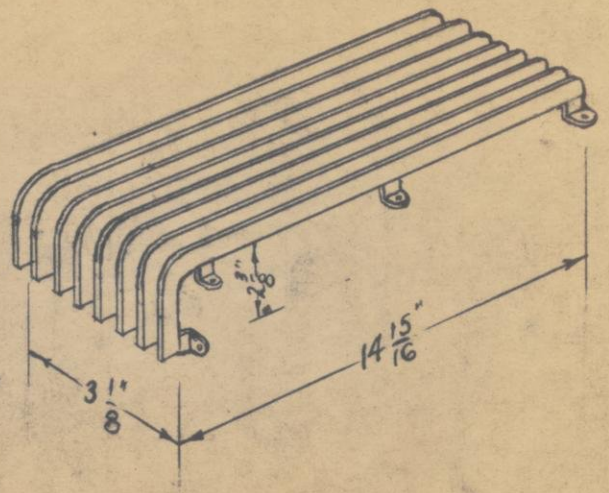

VENTILATOR

CAST IRON

SEE B. P. NO. 29349-X-A PATTERN NO. 1394

HAMILTON MFG. CO.

DO NOT REMOVE THIS LEAF FROM BOOK

DATE- REC. 11-27-35

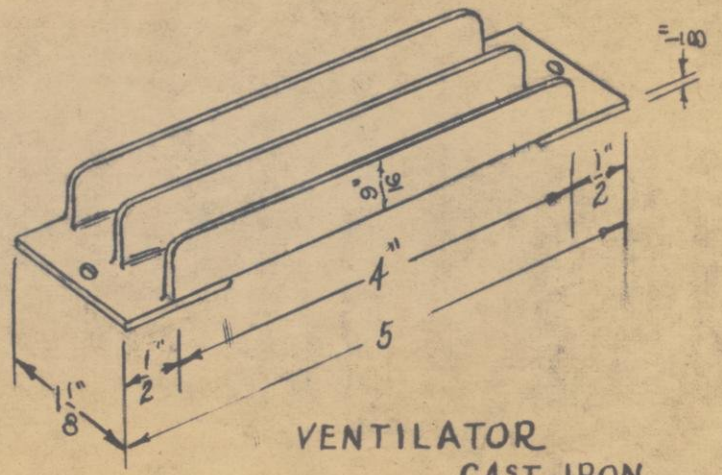

VENTILATOR
CAST IRON

SEE B. P. NO. 29349-X-A PATTERN NO. 1395

9456 - 9475

HAMILTON MFG. CO.

DO NOT REMOVE THIS LEAF FROM BOOK

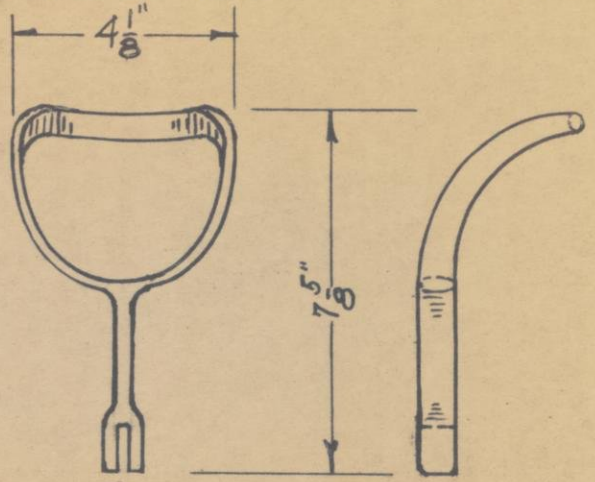

STIRRUPS MALL. IR.

DATE- 12-23-35

SEE B. P. NO. 9456-2 PATTERN NO. 1398

HAMILTON MFG. CO.

DO NOT REMOVE THIS LEAF FROM BOOK

DATE- 1-24-36

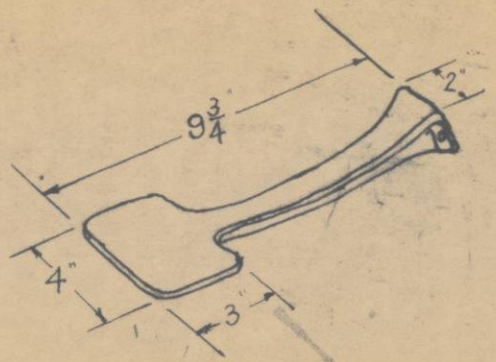

FOOT PEDAL FOR AUTO. SHIFT
CAST IRON

SEE B. P. NO. 1818XQ

PATTERN NO. 1399

HAMILTON MFG. CO.

DO NOT REMOVE THIS LEAF FROM BOOK

DATE- Dec.

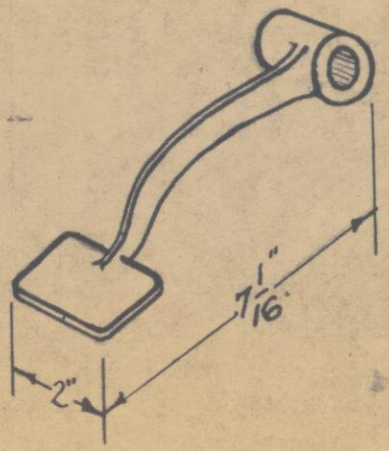

CAST IRON

SEE B. P. NO. 144 X-F

PATTERN NO. 1400

HAMILTON MFG. CO.

DO NOT REMOVE THIS LEAF FROM BOOK

DATE- 4-28-36

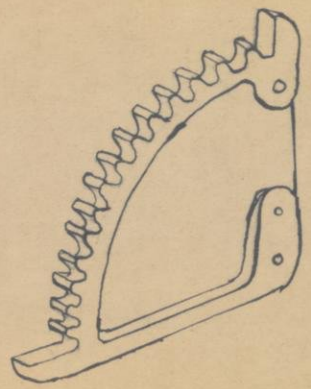

RATCHET FOR DRAWING TABLE

SEE B. P. NO. 0020315-A

PATTERN NO. 1401 R+L

HAMILTON MFG. CO.

DO NOT REMOVE THIS LEAF FROM BOOK

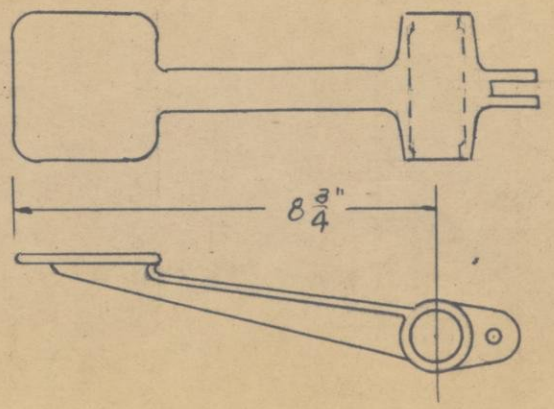

FOOT PEDAL

DATE- 4-28-36

SEE B. P. NO. 0020315-A PATTERN NO. 1402

HAMILTON MFG. CO.

DO NOT REMOVE THIS LEAF FROM BOOK

DATE- 4-28-36

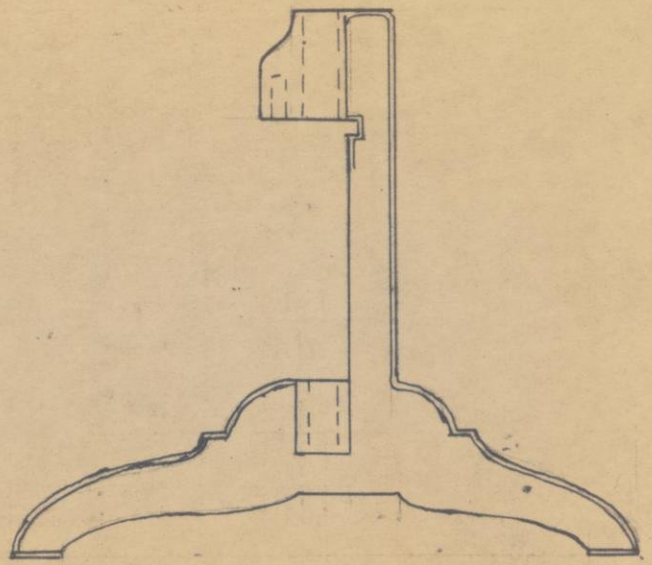

PEDESTAL FOR DRAWING TABLE

SEE B. P. NO. 002031S

PATTERN NO. 1403

3

HAMILTON MFG. CO.

DO NOT REMOVE THIS LEAF FROM BOOK

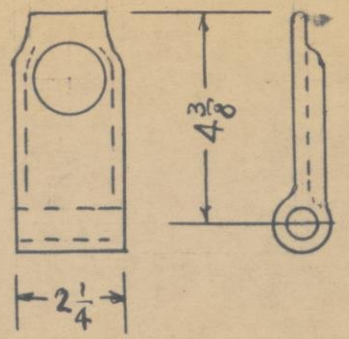

CLAMP

DATE- 4-28-36

SEE B. P. NO. 0020315-A PATTERN NO. 1404

HAMILTON MFG. CO.

DO NOT REMOVE THIS LEAF FROM BOOK

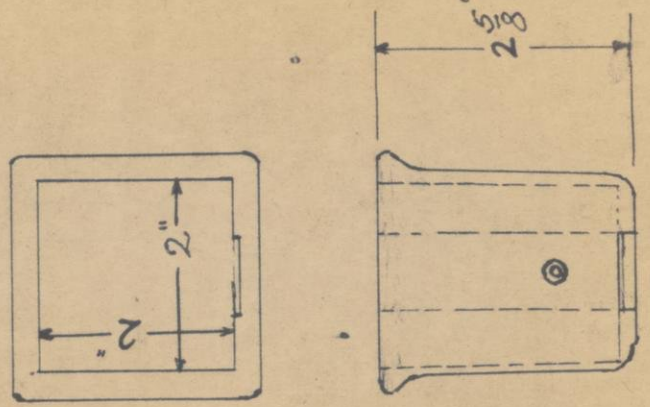

DATE-

LABORATORY SHOE

SEE B. P. NO.

PATTERN NO. 1405

No NUMBER ASSIGNED

HAMILTON MFG. CO.

DO NOT REMOVE THIS LEAF FROM BOOK

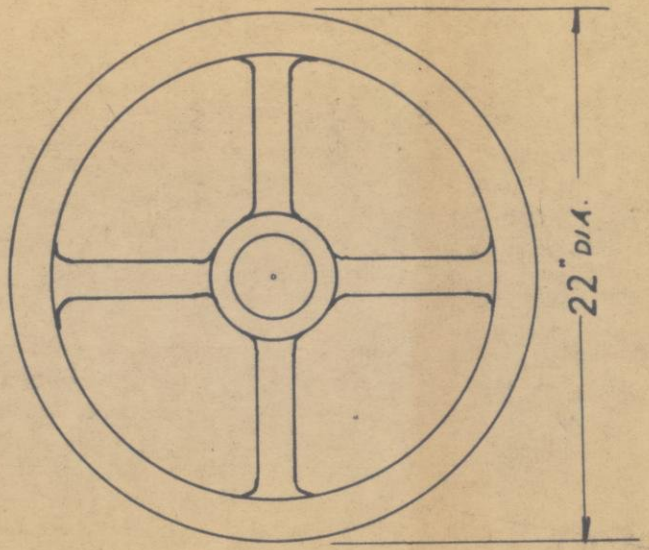

DATE- 5-25-36 - G.R.C.

HAND WHEEL FOR TRANSFER TRUCK

SEE B. P. NO. 570-C

PATTERN NO. 1407

HAMILTON MFG. CO.

DO NOT REMOVE THIS LEAF FROM BOOK

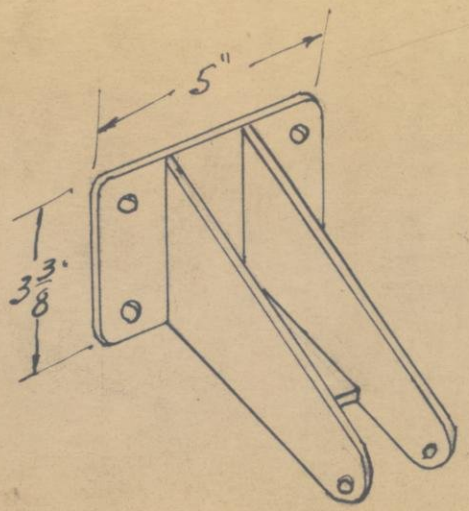

REAR FORK FOR CASTER

DATE- 6-1-36 G.R.S.

SEE B. P. NO. 571-C

PATTERN NO. 1408

HAMILTON MFG. CO.

DO NOT REMOVE THIS LEAF FROM BOOK

DATE- 7-27-36

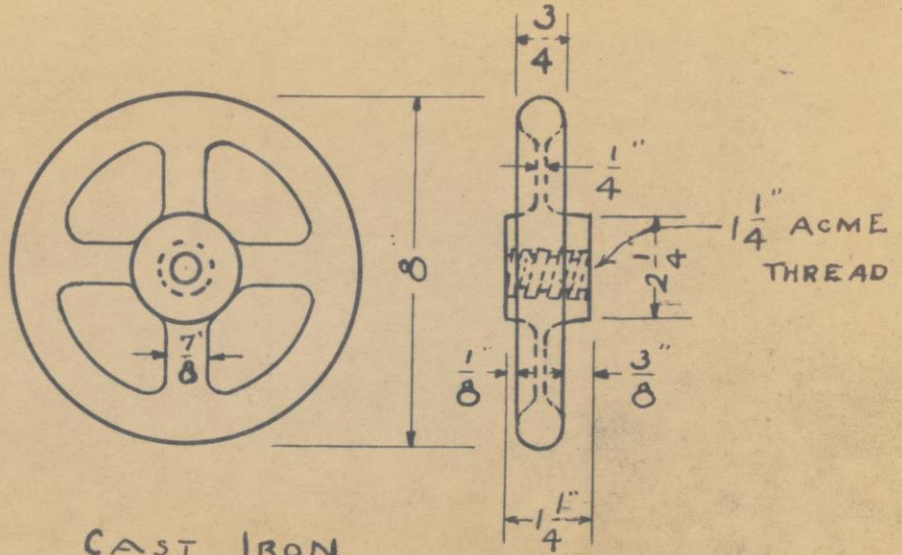

CAST IRON

HAND WHEEL FOR DRAWING TABLE

SEE B. P. NO. 573-C

PATTERN NO. 1413

HAMILTON MFG. CO.

DO NOT REMOVE THIS LEAF FROM BOOK

OK

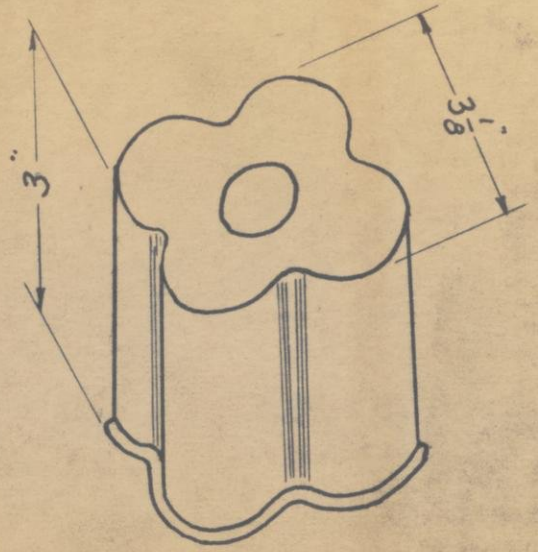

DATE- 7-21-36

HUB FOR STOOL

SEE B. P. NO 584-C PATTERN NO. 1416

OLD B.P.No. 9825-A
CHG 12-5-45 GRC 584C

X-5A

HAMILTON MFG. CO.

DO NOT REMOVE THIS LEAF FROM BOOK

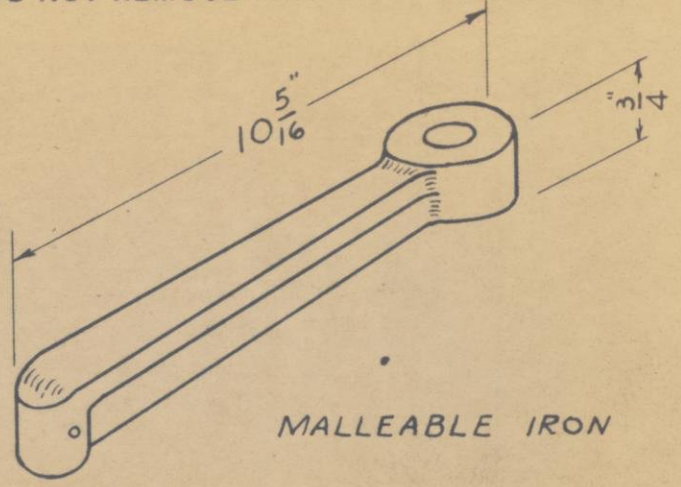

MALLEABLE IRON

ARM FOR ARM REST

SEE B. P. NO. 9543 PATTERN NO. 1419

DATE- P.F.J. 8-10-36

HAMILTON MFG. CO.

DO NOT REMOVE THIS LEAF FROM BOOK

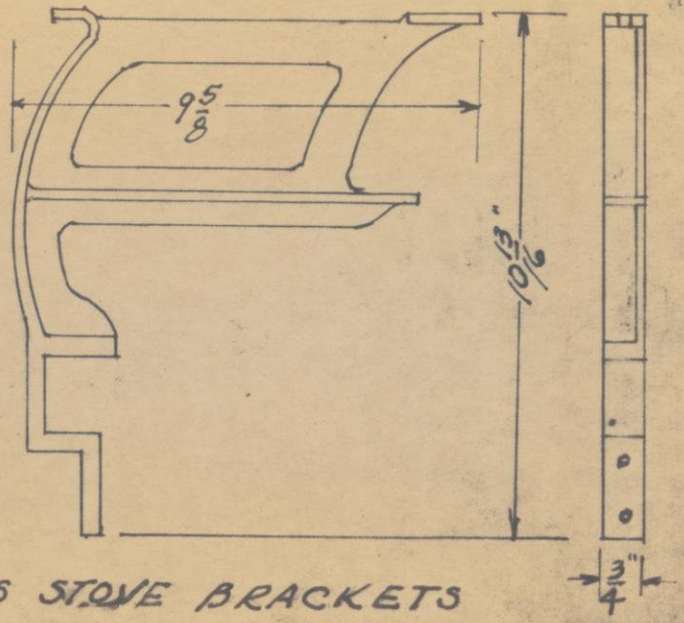

DATE-

GAS STOVE BRACKETS

SEE B. P. NO. V-1560XE

PATTERN NO. 1420

HAMILTON MFG. CO.

DO NOT REMOVE THIS LEAF FROM BOOK

NO DRAWING

DATE-

SEE B. P. NO.

PATTERN NO. 1421

HAMILTON MFG. CO.

DO NOT REMOVE THIS LEAF FROM BOOK

NO DRAWING

DATE-

SEE B. P. NO.

MOULDING NO. 1422

HAMILTON MFG. CO.

DO NOT REMOVE THIS LEAF FROM BOOK

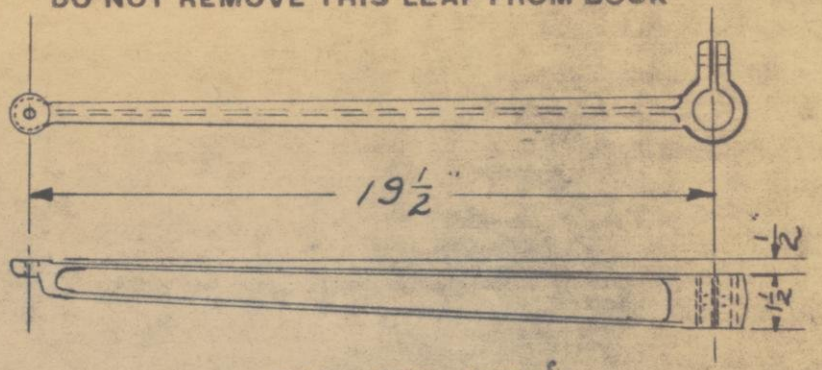

BRACKET ARM

DATE- 4-22-38-hc.

SEE B. P. NO. 207-208-DX PATTERN NO. 1423

HAMILTON MFG. CO.

DO NOT REMOVE THIS LEAF FROM BOOK

DATE- 9-23-36 BY: P.F.J.

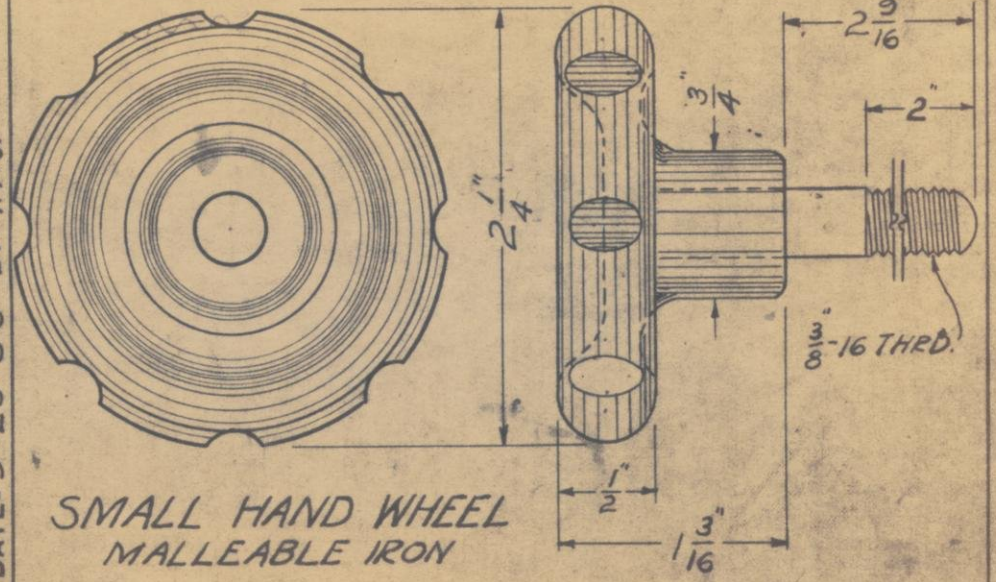

SMALL HAND WHEEL
MALLEABLE IRON

SEE B. P. NO. 9815-XC PATTERN NO. 1424

HAMILTON MFG. CO.

DO NOT REMOVE THIS LEAF FROM BOOK

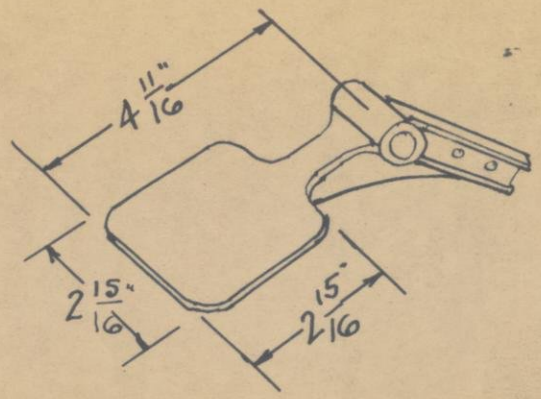

DATE- 3-24-37

FOOT PEDAL FOR Nº 142 CAB'T

SEE B. P. NO. 142-XB

PATTERN NO. 1435

HAMILTON MFG. CO.

DO NOT REMOVE THIS LEAF FROM BOOK

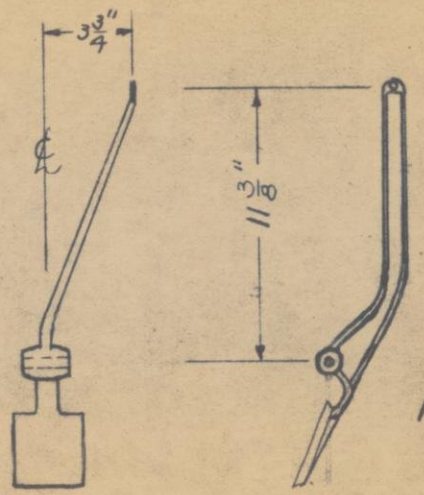

FOOT LEVER NO. 1

DATE-

SEE B. P. NO. 142 XB

PATTERN NO. 1436

HAMILTON MFG. CO.

DO NOT REMOVE THIS LEAF FROM BOOK

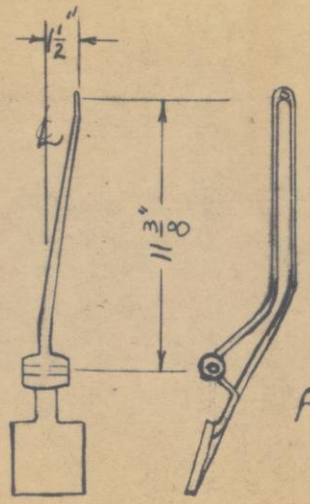

FOOT LEVER NO-2

DATE-

SEE B. P. NO. 142 XB

PATTERN NO. 1437

HAMILTON MFG. CO.

DO NOT REMOVE THIS LEAF FROM BOOK

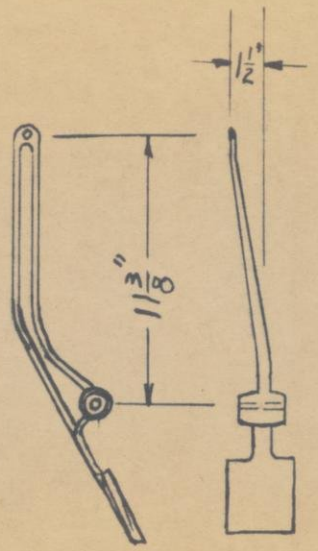

FOOT LEVER
NO-3

DATE-

SEE B. P. NO. 142 XB

PATTERN NO. 1438

HAMILTON MFG. CO.

DO NOT REMOVE THIS LEAF FROM BOOK

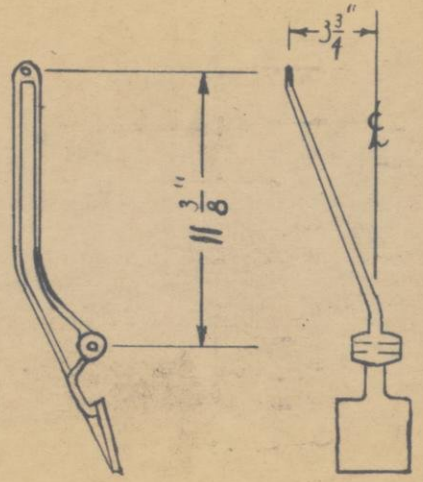

FOOT LEVER NO-4

DATE-

SEE B. P. NO. 142 XB

PATTERN NO. 1439

HAMILTON MFG. CO.

DO NOT REMOVE THIS LEAF FROM BOOK

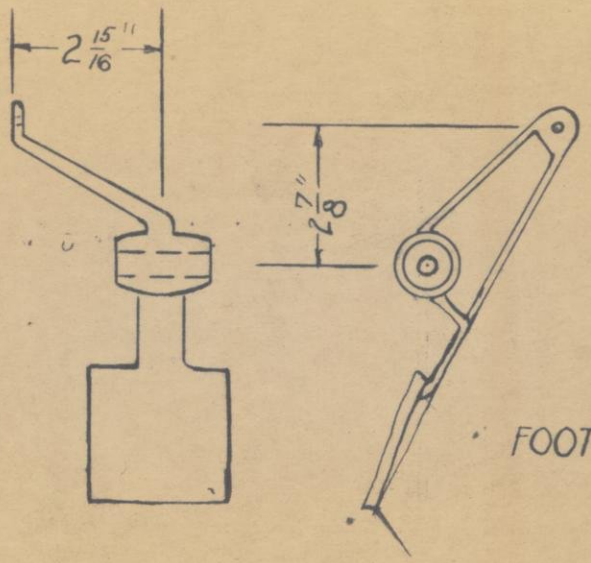

FOOT LEVER NO.-5

DATE-

SEE B. P. NO. 142 XB

PATTERN NO. 1440

HAMILTON MFG. CO.

DO NOT REMOVE THIS LEAF FROM BOOK

PATTERN NOT MADE

DATE-

SEE B. P. NO.

PATTERN NO. 1441

• HAMILTON MFG. CO.

DO NOT REMOVE THIS LEAF FROM BOOK

DATE- 6-8-37

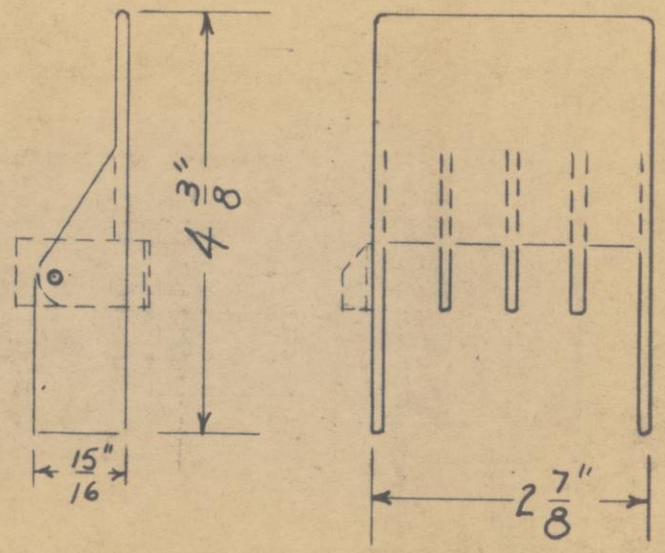

GATE SUPPORT

SEE B. P. NO. 143XK

PATTERN NO. 1451

HAMILTON MFG. CO.

DO NOT REMOVE THIS LEAF FROM BOOK

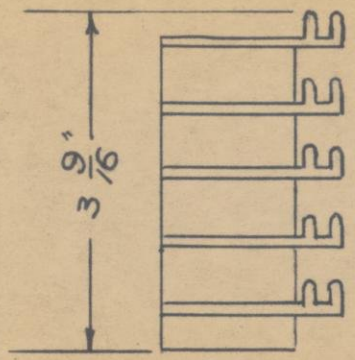

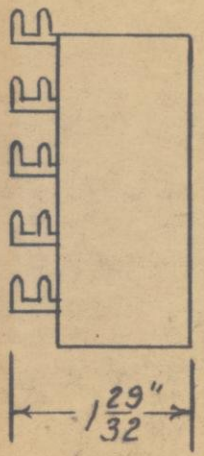

DATE-

SLIDE

SEE B. P. NO. 143XK

PATTERN NO. 1452

HAMILTON MFG. CO:

DO NOT REMOVE THIS LEAF FROM BOOK

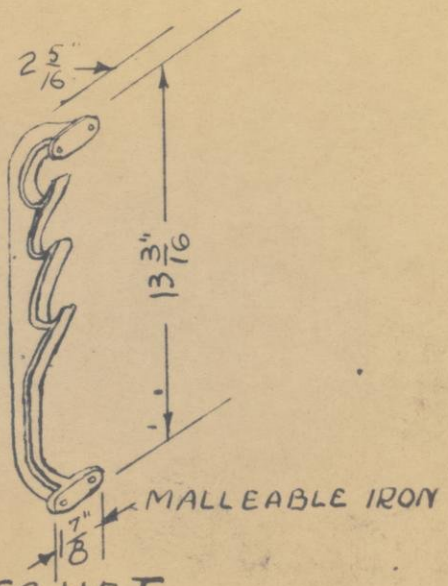

RATCHET

DATE- 6-19-31 MC

SEE B. P. NO. 9468-X-5

PATTERN NO. 1453

HAMILTON MFG. CO.

DO NOT REMOVE THIS LEAF FROM BOOK

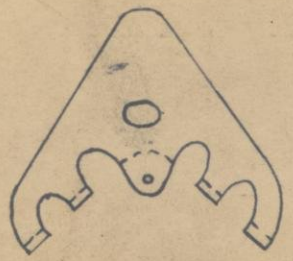

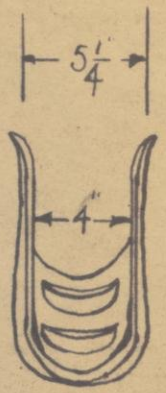

DATE-

BIERHOFF CRUTCH

MALLEABLE IRON

SEE B. P. NO. 9460 XZ PATTERN NO. 1454

HAMILTON MFG. CO.

DO NOT REMOVE THIS LEAF FROM BOOK

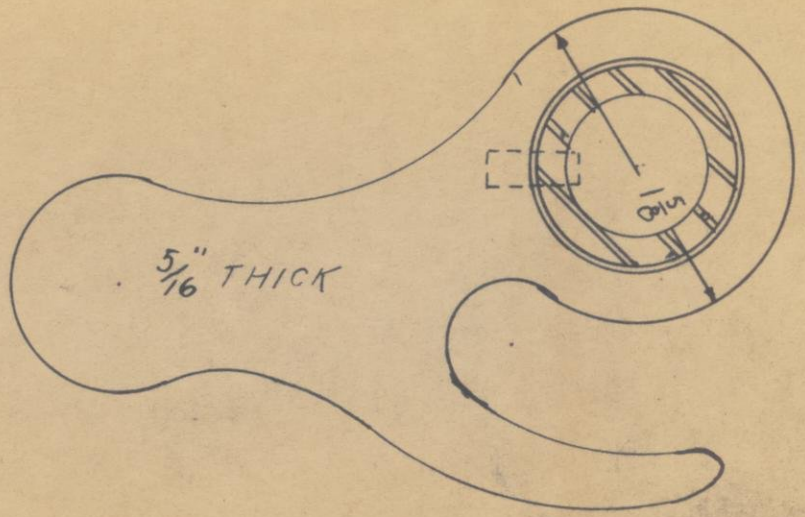

DATE- 7-19-37

HOOK FOR MAIL BAGS

SEE B. P. NO. 15043X

PATTERN NO. 1457

HAMILTON MFG. CO.

DO NOT REMOVE THIS LEAF FROM BOOK

NO DRAWING

DATE-

SEE B. P. NO.

PATTERN NO. 1458

HAMILTON MFG. CO.

DO NOT REMOVE THIS LEAF FROM BOOK

TOP CROSS MEMBER

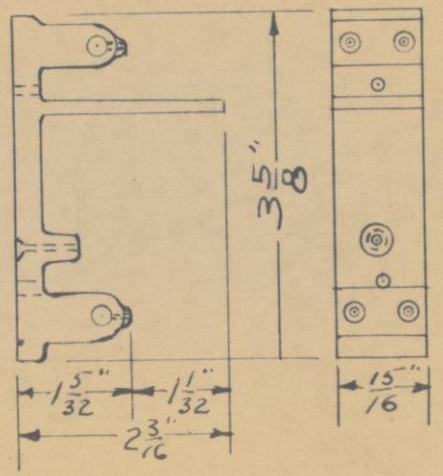

DATE- 9-25-37

SEE B. P. NO. 143-X-0

PATTERN NO. 1459

HAMILTON MFG. CO.

DO NOT REMOVE THIS LEAF FROM BOOK

DATE- 9-27-37

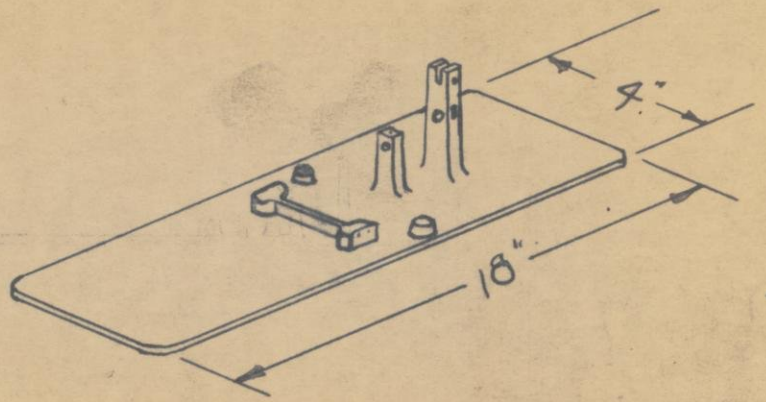

BASE CASTING

SEE B. P. NO. 143-X-0 PATTERN NO. 1460

HAMILTON MFG. CO.

DO NOT REMOVE THIS LEAF FROM BOOK

DATE- 9-7-37 H.C.B.

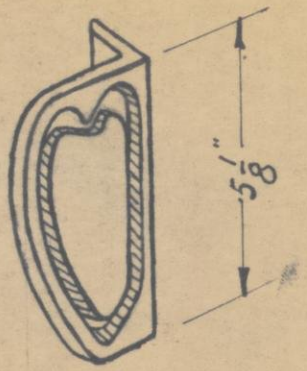

CAM FOR FOOT PEDAL CABT.

CAST IRON

SEE B. P. NO. 142 X-F PATTERN NO. 1462

HAMILTON MFG. CO.

DO NOT REMOVE THIS LEAF FROM BOOK

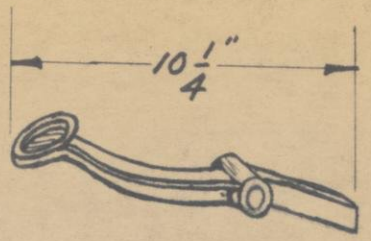

FOOT PEDAL PATTERN NO. 1463

MALLEABLE IRON

~~Cast Iron~~

DATE-

SEE B. P. NO. 142-F

PATTERN NO. 1463

HAMILTON MFG. CO.

DO NOT REMOVE THIS LEAF FROM BOOK

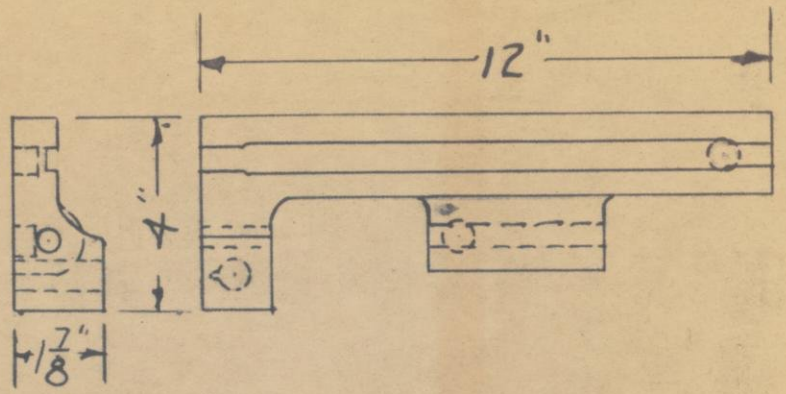

SLIDE

DATE-

SEE B. P. NO. 15221-XB

PATTERN NO. 1464

HAMILTON MFG. CO.

DO NOT REMOVE THIS LEAF FROM BOOK

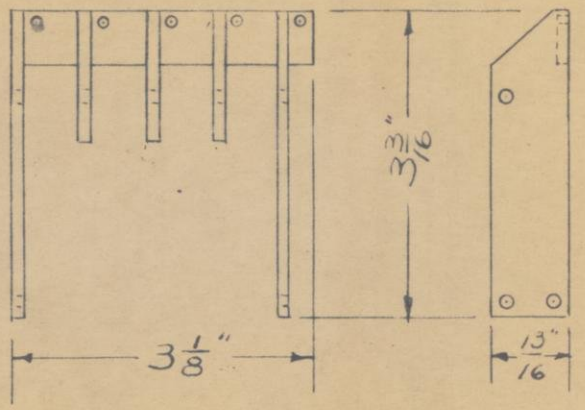

GATE HOLDER

DATE- 9-25-37

SEE B. P. NO. 143-X-P

PATTERN NO. 1468

HAMILTON MFG. CO.

DO NOT REMOVE THIS LEAF FROM BOOK

DATE- 9-25-37

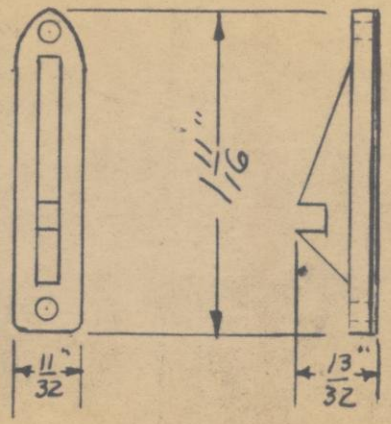

LUG

SEE B. P. NO. 143-X-P PATTERN NO. 1469

HAMILTON MFG. CO.

DO NOT REMOVE THIS LEAF FROM BOOK

DATE- 9-27-37

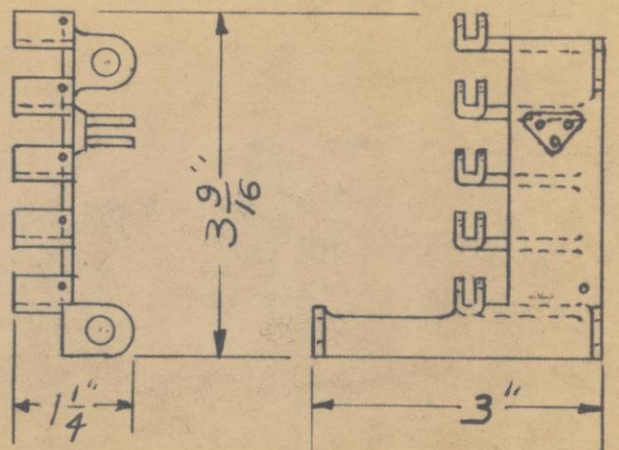

SLIDE

SEE B. P. NO. 143-X-P PATTERN NO. 1470

HAMILTON MFG. CO.

DO NOT REMOVE THIS LEAF FROM BOOK

DATE- 9-27-37

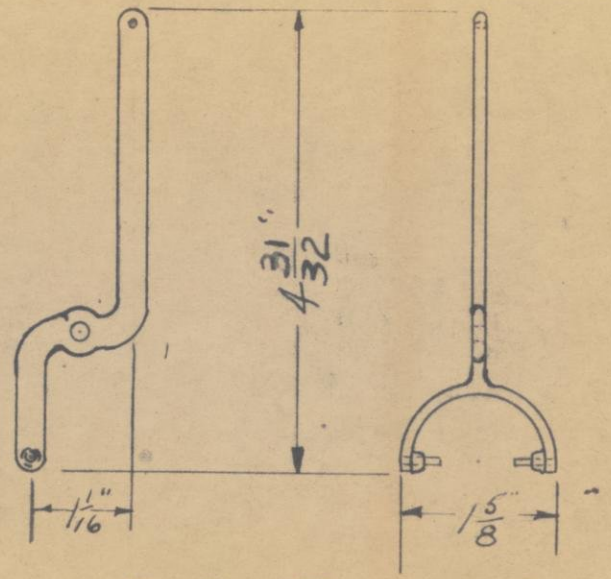

THRUST LEVER

SEE B. P. NO. 143 X P

PATTERN NO. 1471

HAMILTON MFG. CO.

DO NOT REMOVE THIS LEAF FROM BOOK

DATE- 9-30-37

MATERIAL:
CAST IRON- MUST BE SMOOTH. NO BLOW HOLES.

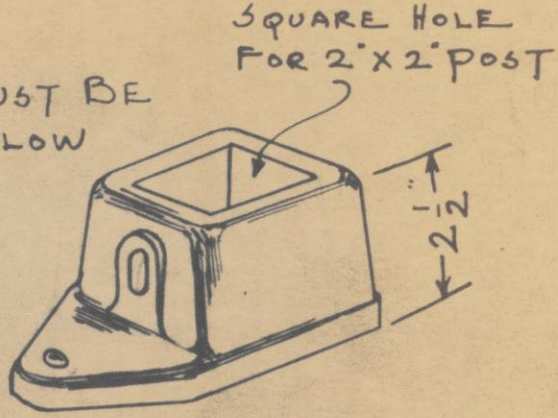

SHOE FOR TABLE.

SEE B. P. NO. 574-C PATTERN NO. 1472-

HAMILTON MFG. CO.

DO NOT REMOVE THIS LEAF FROM BOOK

DATE- 10-15-37

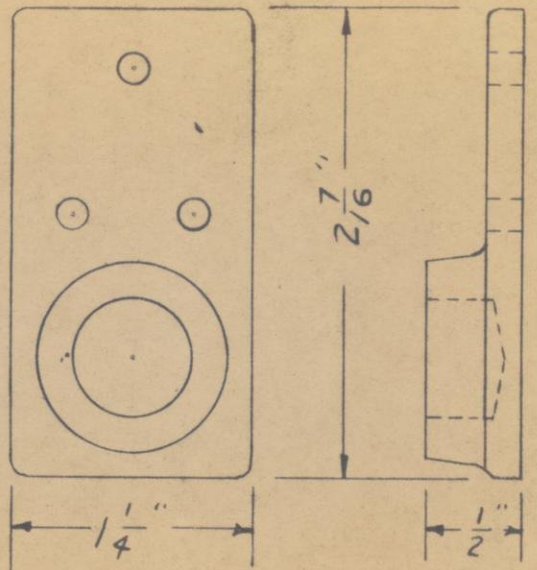

C.I. END BEARING

SEE B. P. NO. 142-XM PATTERN NO. 1473

HAMILTON MFG. CO.

DO NOT REMOVE THIS LEAF FROM BOOK

DATE- 10-15-37

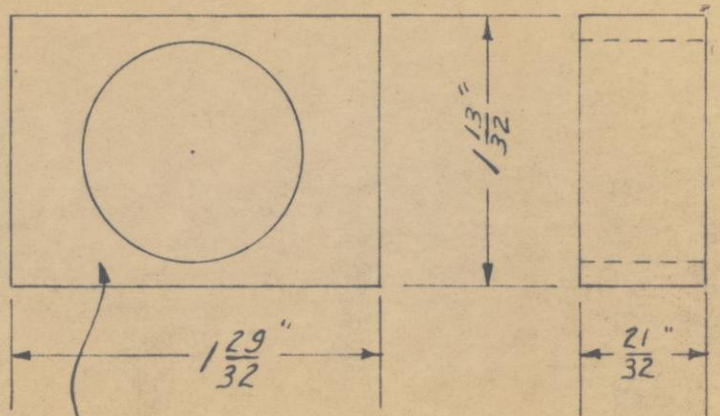

BRASS. TAPE GUIDE

SEE B. P. NO. 142-XO PATTERN NO. 1474

HAMILTON MFG. CO.

DO NOT REMOVE THIS LEAF FROM BOOK

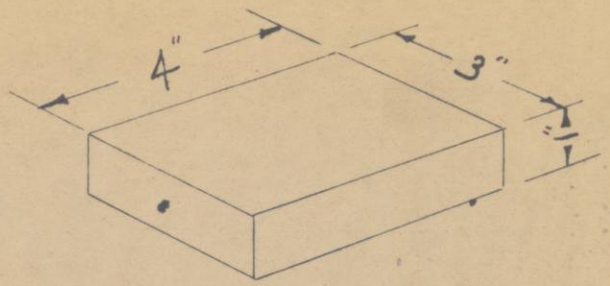

DATE- 11-17-37 M.C.

CAST IRON COUNTER WEIGHT

SEE B. P. NO. 1818-X-U PATTERN NO. 1475

HAMILTON MFG. CO.

DO NOT REMOVE THIS LEAF FROM BOOK

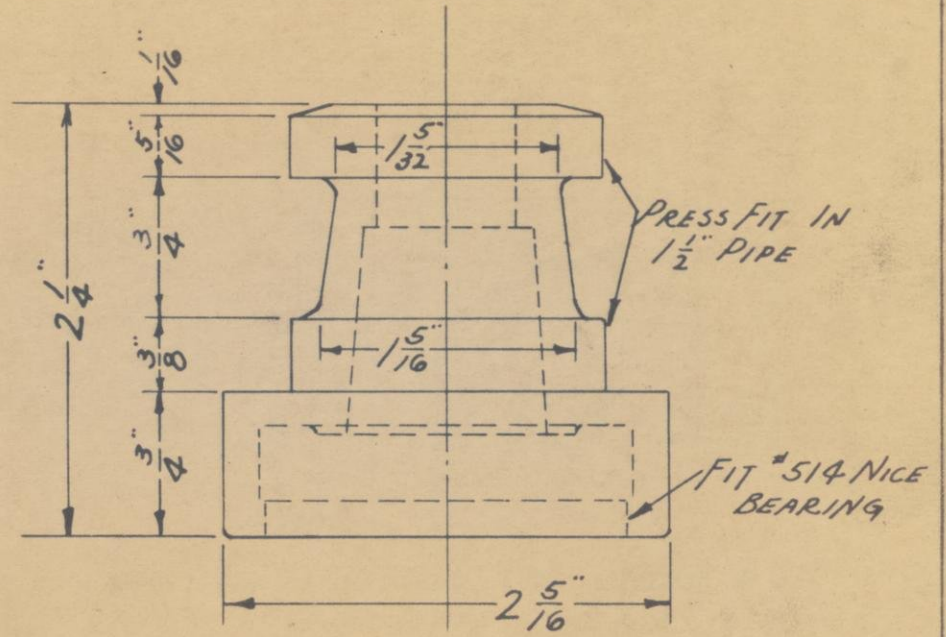

DATE- 1-7-38 C.G.K.

SEE B. P. NO. 002/999-A PATTERN NO. 1478

HAMILTON MFG. CO.

DO NOT REMOVE THIS LEAF FROM BOOK

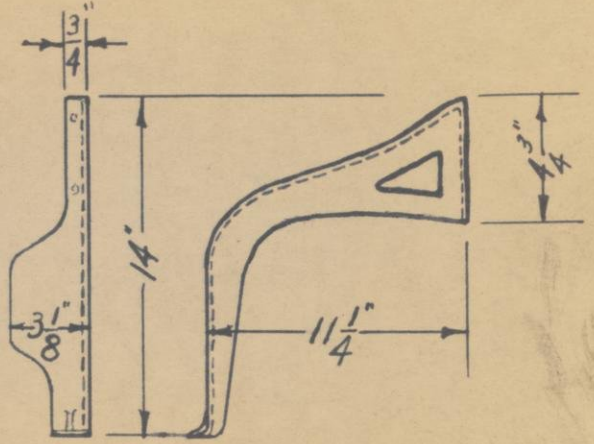

BRACKET FOR COASTER CHAIR RAIL
TO BE USED WITH 42" TOP ONLY

SEE B. P. NO. 19066 X-D PATTERN NO. 1479R&L

DATE- 12-27-37 JEB.

HAMILTON MFG. CO.

DO NOT REMOVE THIS LEAF FROM BOOK

OK

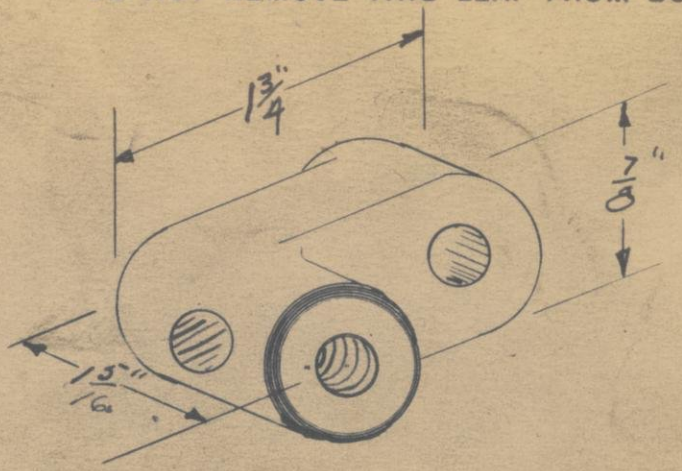

TILTING DEVICE CASTING

DATE-

SEE B. P. NO. 268-W

PATTERN NO. 1480

HAMILTON MFG. CO.

DO NOT REMOVE THIS LEAF FROM BOOK

NO DRAWING

DATE-

SEE B. P. NO.

PATTERN NO. 1481

THE HAMILTON MFG. CO.

DON'T REMOVE THIS LEAF FROM BOOK

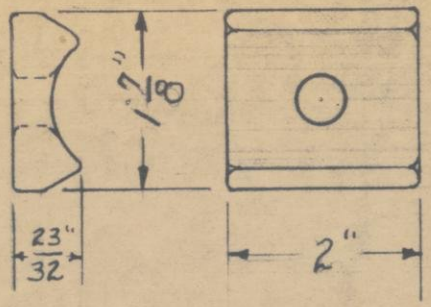

CAST IRON SADDLE

PATTERN NO. 1486

SEE B. P. NO. 0022208

THE HAMILTON MFG. CO.

DON'T REMOVE THIS LEAF FROM BOOK

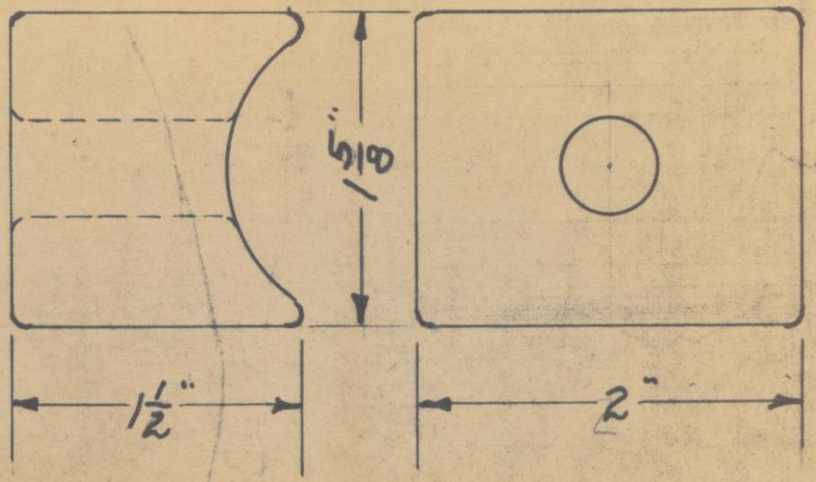

CAST IRON SADDLE

17004 D PATTERN NO. 1487

SEE B. P. NO. ~~15497 JX~~

HAMILTON MFG. CO.

DO NOT REMOVE THIS LEAF FROM BOOK

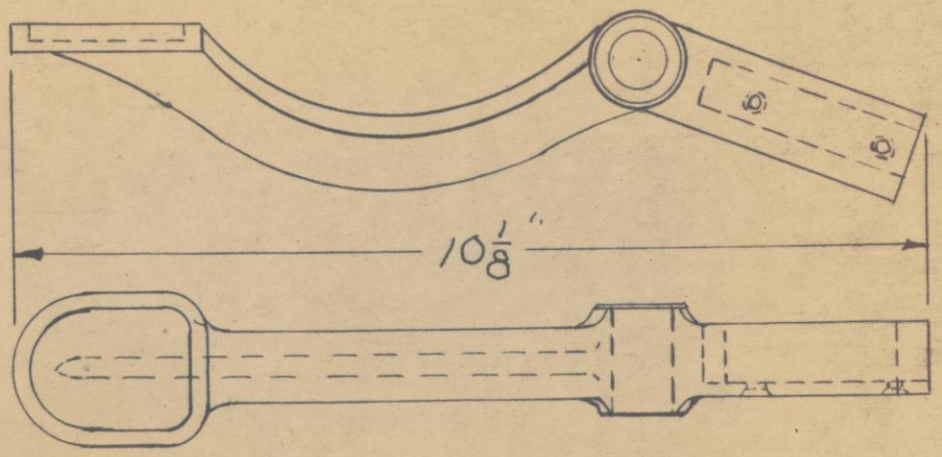

C. I. FOOT PEDAL

DATE- MC 5-26-38

SEE B. P. NO. 31588-E

PATTERN NO. 1488

HAMILTON MFG. CO.

DO NOT REMOVE THIS LEAF FROM BOOK

DATE- 6·3·38

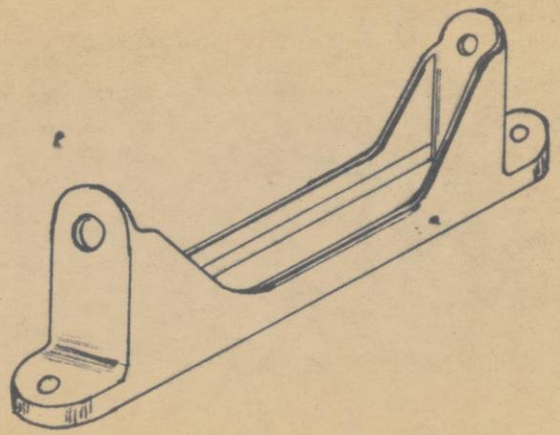

TAIL SCREW BODY
CAST IRON

SEE B. P. NO. 1B-2360-A PATTERN NO. 1489

HAMILTON MFG. CO.

DO NOT REMOVE THIS LEAF FROM BOOK

DATE- 6-3-38



TAIL SCREW RING
CAST IRON

SEE B. P. NO. 1B-2360-D PATTERN NO. 1490

HAMILTON MFG. CO.

DO NOT REMOVE THIS LEAF FROM BOOK

DATE- 6-3-38

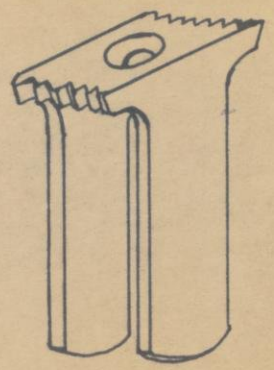

TAIL SCREW JAW
CAST IRON

SEE B. P. NO. 1B-2360-C PATTERN NO. 1491

HAMILTON MFG. CO.

DO NOT REMOVE THIS LEAF FROM BOOK

DATE- 6-3-38

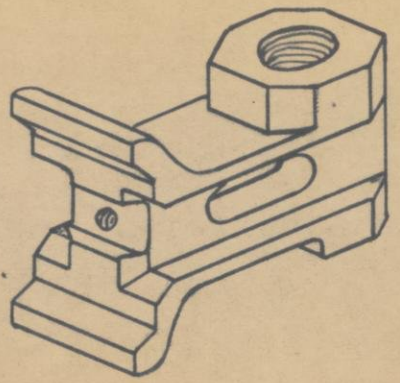

TAIL SCREW STOP
CAST IRON

SEE B. P. NO. 1B-2360-B PATTERN NO. 1492

HAMILTON MFG. CO.

DO NOT REMOVE THIS LEAF FROM BOOK

DATE- 6-3-38

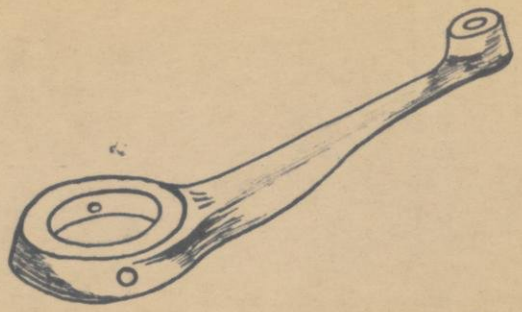

TAIL SCREW HANDLE
CAST IRON

SEE B. P. NO. 1B-2360-E PATTERN NO. 1493

HAMILTON MFG. CO.

DO NOT REMOVE THIS LEAF FROM BOOK

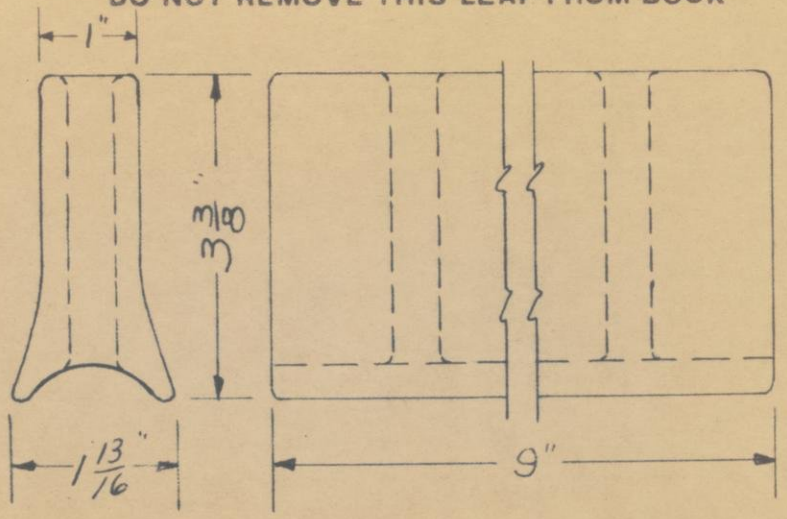

C.I. FILLER FOR ONE SIDED BANK

DATE- 5/31/38

SEE B. P. NO. 15470-XDA PATTERN NO. 1494

HAMILTON MFG. CO.

DO NOT REMOVE THIS LEAF FROM BOOK

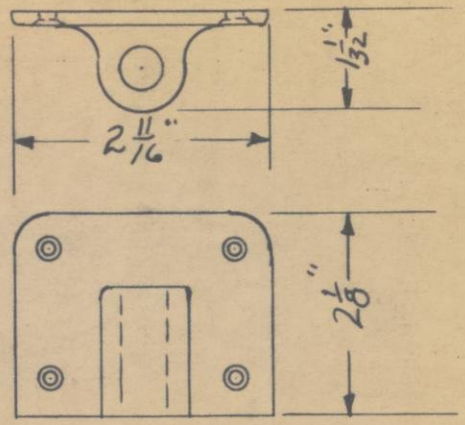

C.I. BRACKET

DATE- M.C. 8/25/38

SEE B. P. NO. 9543-A PATTERN NO. 1495

HAMILTON MFG. CO.

DO NOT REMOVE THIS LEAF FROM BOOK

DATE- M.C. 6-14-38

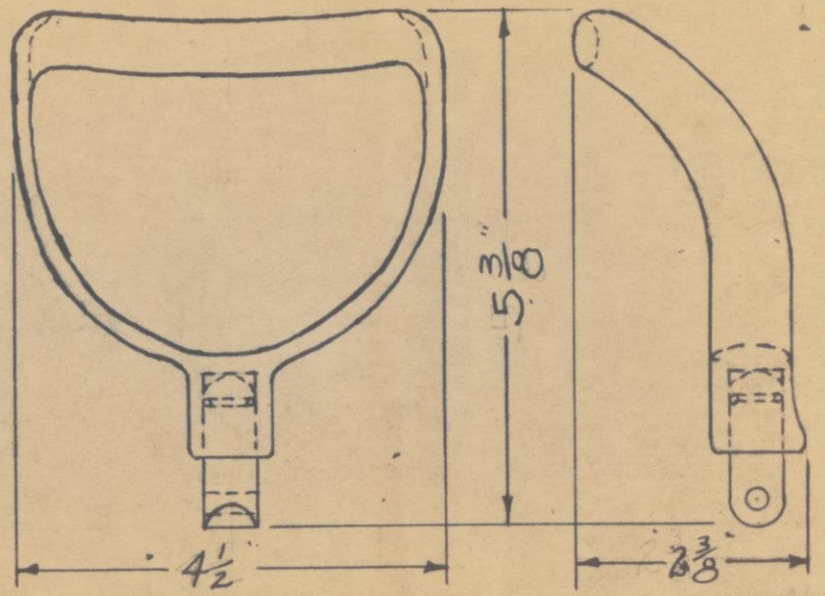

STIRRUP

SEE B. P. NO. 0022338-A PATTERN NO. 1496

HAMILTON MFG. CO.

DO NOT REMOVE THIS LEAF FROM BOOK

DATE- M.C. 6-14-38

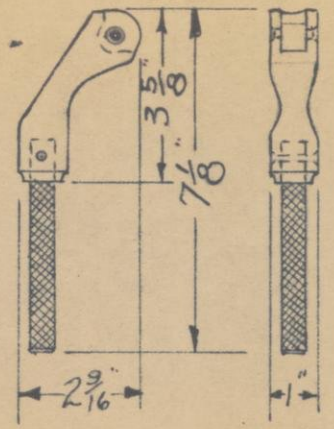

STIRRUP BRACKET

SEE B. P. NO. 0022338-A PATTERN NO. 1497

HAMILTON MFG. CO.

DO NOT REMOVE THIS LEAF FROM BOOK

DATE- 7/12/38

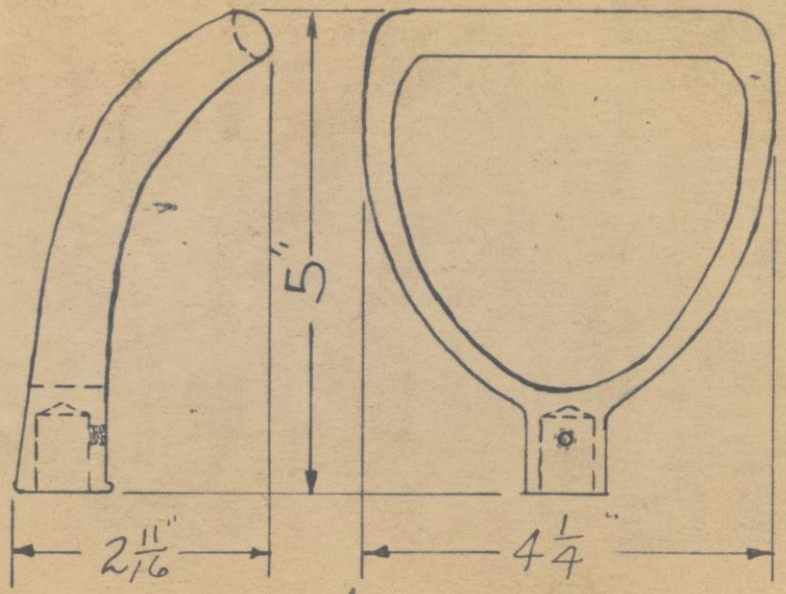

STIRRUP

SEE B. P. NO. 9905-XK PATTERN NO. 1498

HAMILTON MFG. CO.

DO NOT REMOVE THIS LEAF FROM BOOK

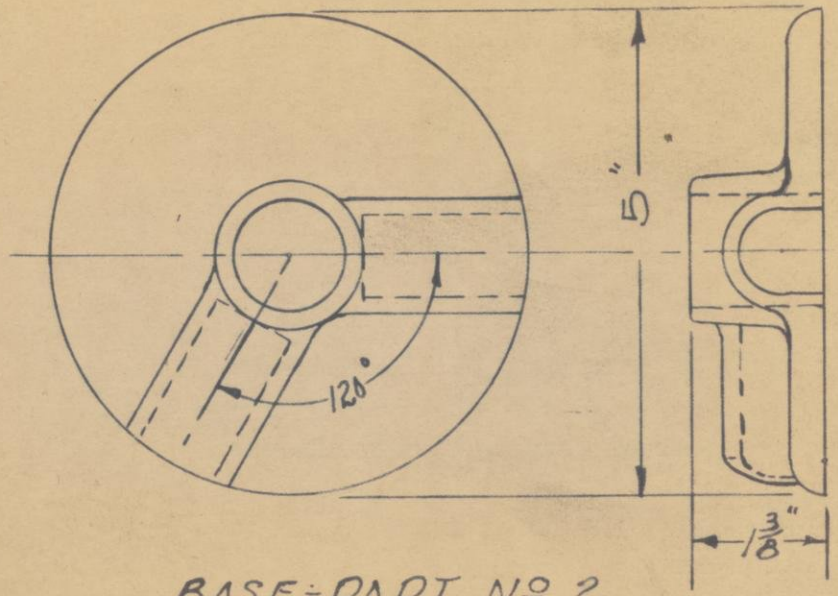

DATE- 7/11/38

BASE - PART Nº 2

SEE B. P. NO. 0022239-A PATTERN NO. 1500

HAMILTON MFG. CO.

DO NOT REMOVE THIS LEAF FROM BOOK

DATE- 7/12/38

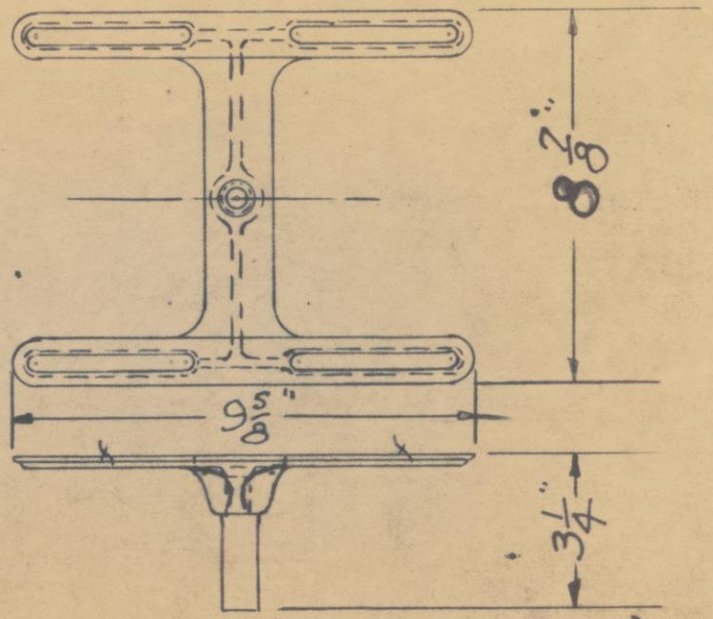

SPIDER ÷ PART Nº 3

SEE B. P. NO. 0022239-A PATTERN NO. 1501

HAMILTON MFG. CO.

DO NOT REMOVE THIS LEAF FROM BOOK

DATE- 7-20-38 LKS

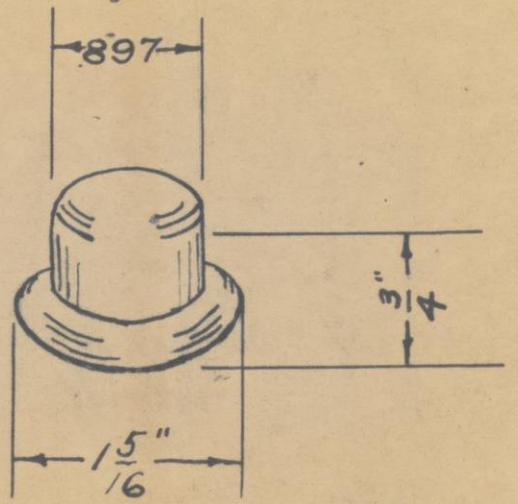

CAST IRON SHOE

SEE B. P. NO. 9825 A-A PATTERN NO. 1502

HAMILTON MFG. CO.

DO NOT REMOVE THIS LEAF FROM BOOK

DATE- DES 8-9-38 REVISED 1-12-39

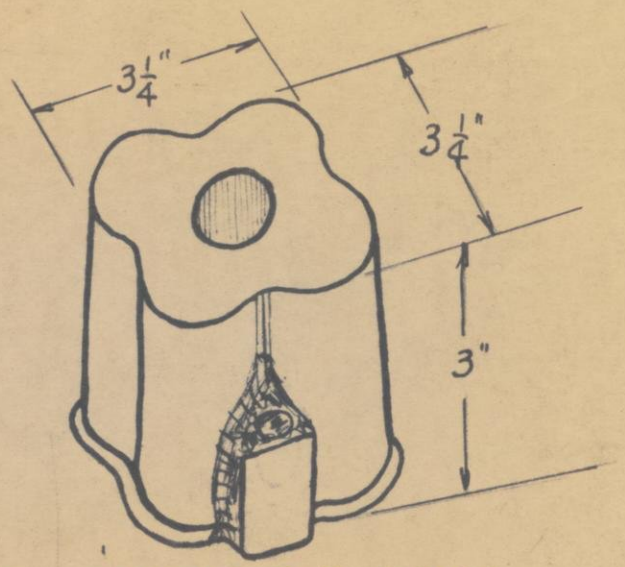

HUB WITH LUG FOR STOOL

CAST IRON

SEE B. P. NO. 423-XB PATTERN NO. 1503

HAMILTON MFG. CO.

DO NOT REMOVE THIS LEAF FROM BOOK

DATE 12-20-38 P.F.J.

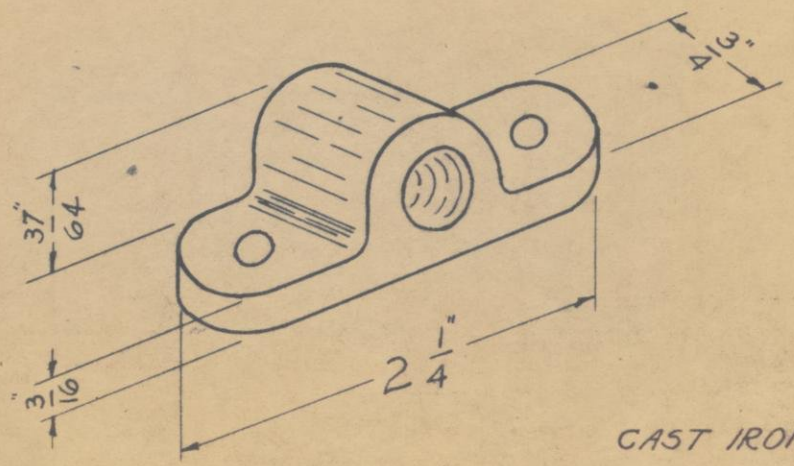

CAST IRON

SEE B. P. NO. 9466-SXA PATTERN NO. 1507

HAMILTON MFG. CO.

DO NOT REMOVE THIS LEAF FROM BOOK

DATE- 1-17-39

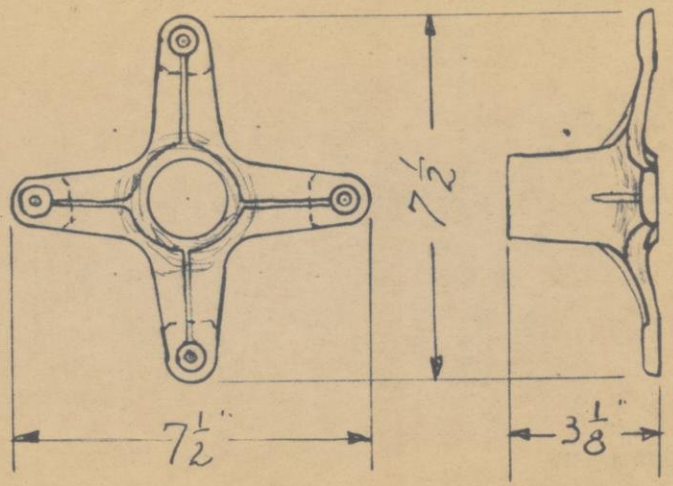

SPIDER

CAST IRON

SEE B. P. NO. 423XB

PATTERN NO. 1508

HAMILTON MFG. CO.

DO NOT REMOVE THIS LEAF FROM BOOK

DATE- 5-16-45-GRC

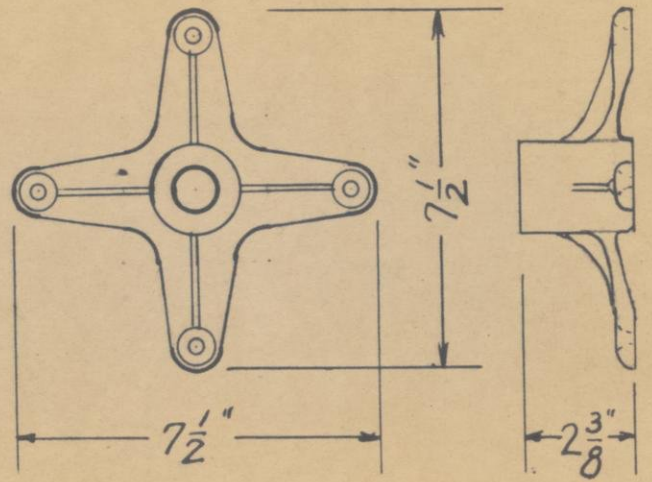

SPIDER - C. I.

SEE B. P. NO. V-1790-XB

PATTERN NO. 1508-A

HAMILTON MFG. CO.

DO NOT REMOVE THIS LEAF FROM BOOK

DATE- Mar. 2-8-39

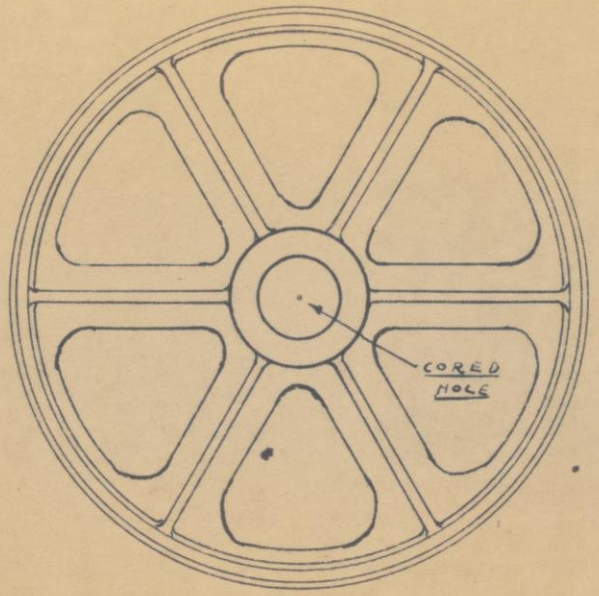

12" WHEEL

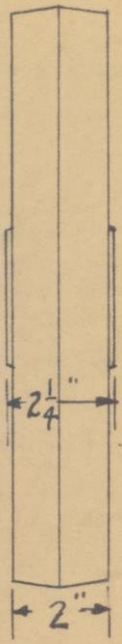

THIS WHEEL IS FOR HYATT BEARING

SEE B. P. NO. 575-C

PATTERN NO. 1509

HAMILTON MFG. CO.

DO NOT REMOVE THIS LEAF FROM BOOK

DATE- 3-2-39

MATERIAL
CAST IRON - MUST BE
SMOOTH - NO BLOW HOLES

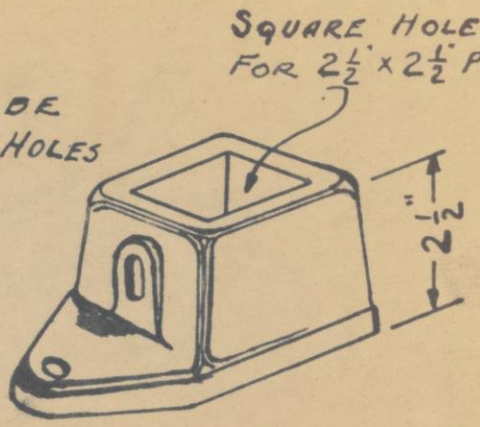

SHOE FOR TABLE

SEE B. P. NO. 576-C

PATTERN NO. 1510

HAMILTON MFG. CO.

DO NOT REMOVE THIS LEAF FROM BOOK

DATE- 4-10-39

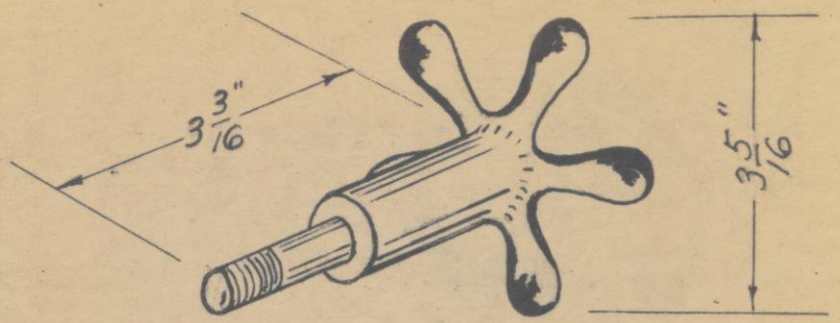

STAR HAND WHEEL
CAST IRON

SEE B. P. NO. 0022928-B PATTERN NO. 1511

HAMILTON MFG. CO.

DO NOT REMOVE THIS LEAF FROM BOOK

DATE- 4-10-39 - E.E.S.



BALL JOINT
MALLEABLE IRON

SEE B. P. NO. 0022928-B PATTERN NO. 1512

HAMILTON MFG. CO.

DO NOT REMOVE THIS LEAF FROM BOOK

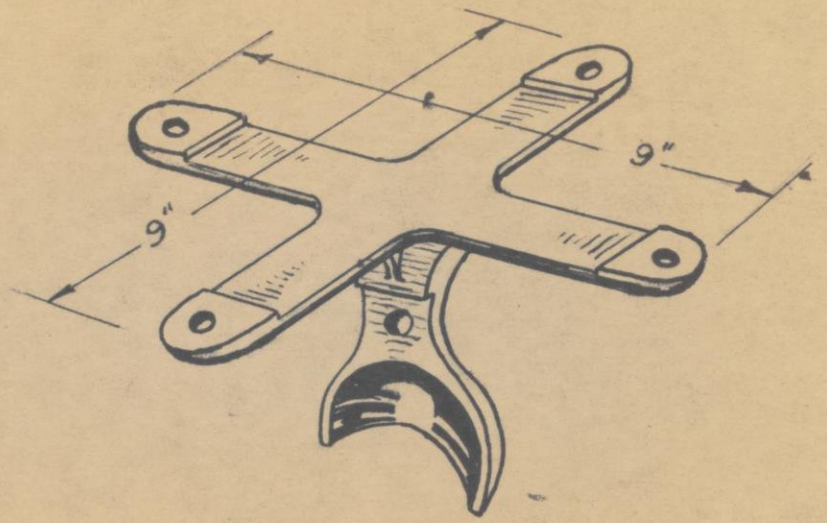

DATE- 4-10-39- KER.

SPIDER SOCKET MALLEABLE IRON

SEE B. P. NO. 0022928-B PATTERN NO. 1513

HAMILTON MFG. CO.

DO NOT REMOVE THIS LEAF FROM BOOK

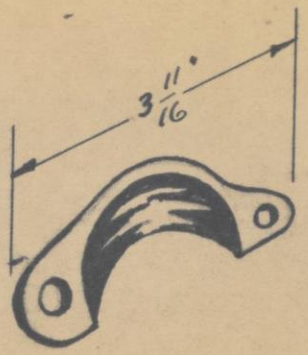

DATE- 4-10-39

CLAMP SOCKET

MALLEABLE IRON

*SEE B. P. NO. 0022928-B PATTERN NO. 1514

HAMILTON MFG. CO.

DO NOT REMOVE THIS LEAF FROM BOOK

DATE- 8-1-39

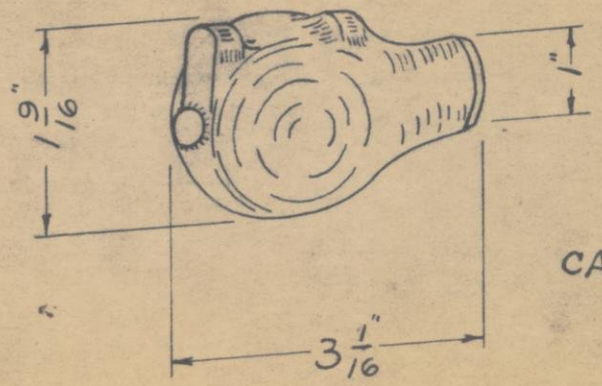

CAST IRON

STIRRUP BAR SOCKET

SEE B. P. NO. 9905-XR PATTERN NO. 1515

HAMILTON MFG. CO.

DO NOT REMOVE THIS LEAF FROM BOOK

MALLEABLE IRON

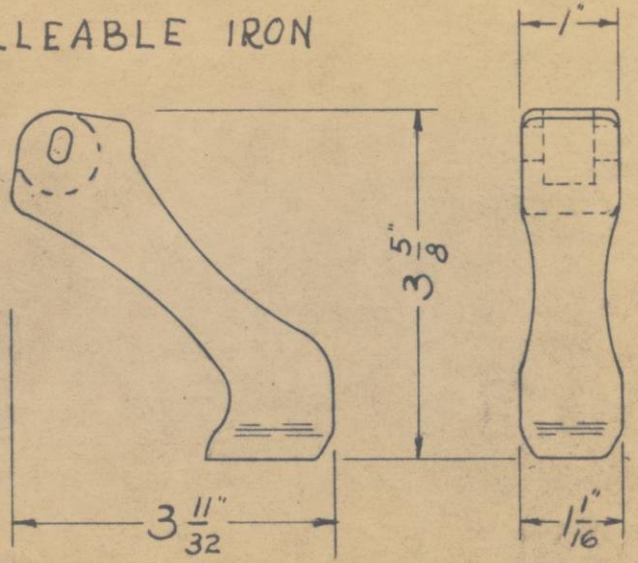

STIRRUP SOCKET

SEE B. P. NO. 9905-XK PATTERN NO. 1516

DATE- 8-1-39

HAMILTON MFG. CO.

DO NOT REMOVE THIS LEAF FROM BOOK

Pump Part Line

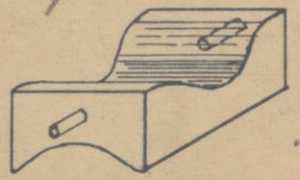

DATE- 8-7-39

№ L-46 CROSSBAR CLAMP INSERT

SEE B. P. NO. L-46-X

PATTERN NO. 1517

HAMILTON MFG. CO.

DO NOT REMOVE THIS LEAF FROM BOOK

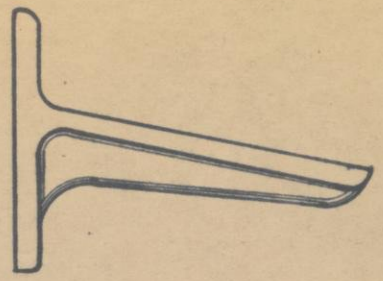

FOOT REST BRACKET

CAST IRON

DATE-10-17-39

SEE B. P. NO. L-0023301-D

PATTERN NO. 1520

HAMILTON MFG. CO.

DO NOT REMOVE THIS LEAF FROM BOOK

CAST IRON SHOE FOR
2½" x 2½" SQUARE LEG

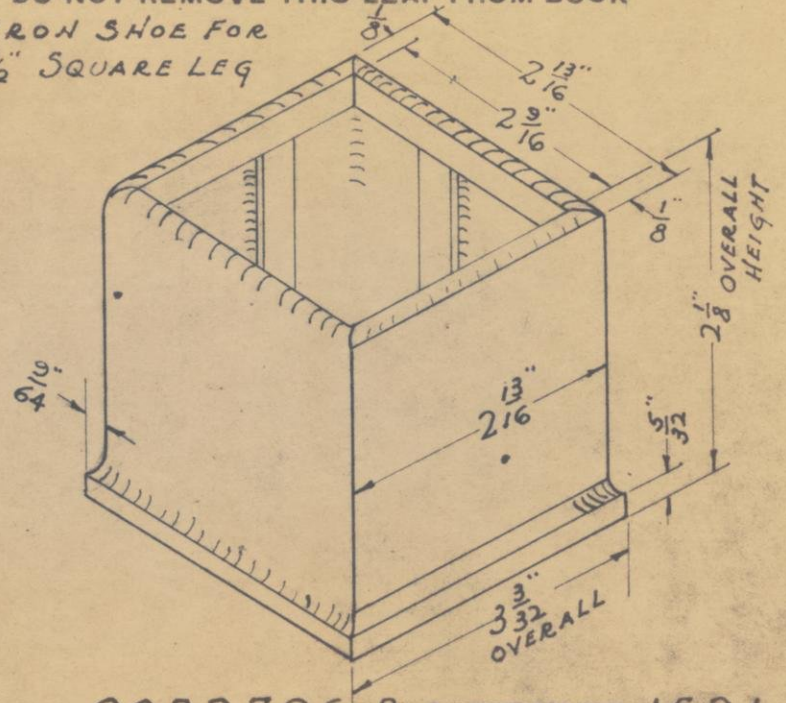

DATE- 11-4-39.

SEE B. P. NO. 0022796-B. PATTERN NO. 1521

HAMILTON MFG. CO.

DO NOT REMOVE THIS LEAF FROM BOOK

DATE-

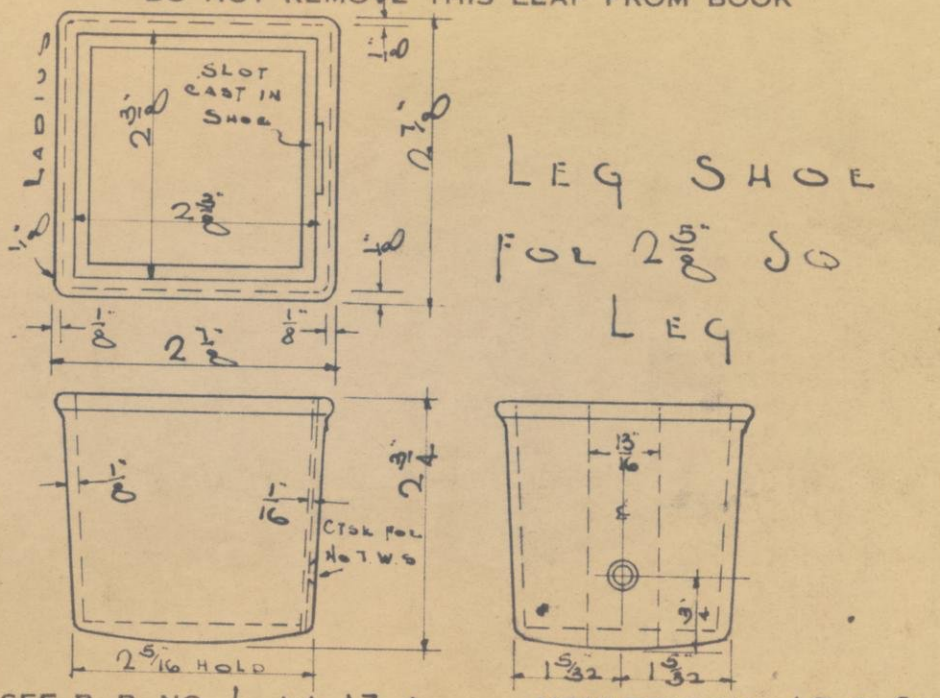

LEG SHOE FOR 2 5/8 SQ LEG

SEE B. P. NO. L. W. 17-A.

MOULDING NO. 1522

HAMILTON MFG. CO.

DO NOT REMOVE THIS LEAF FROM BOOK

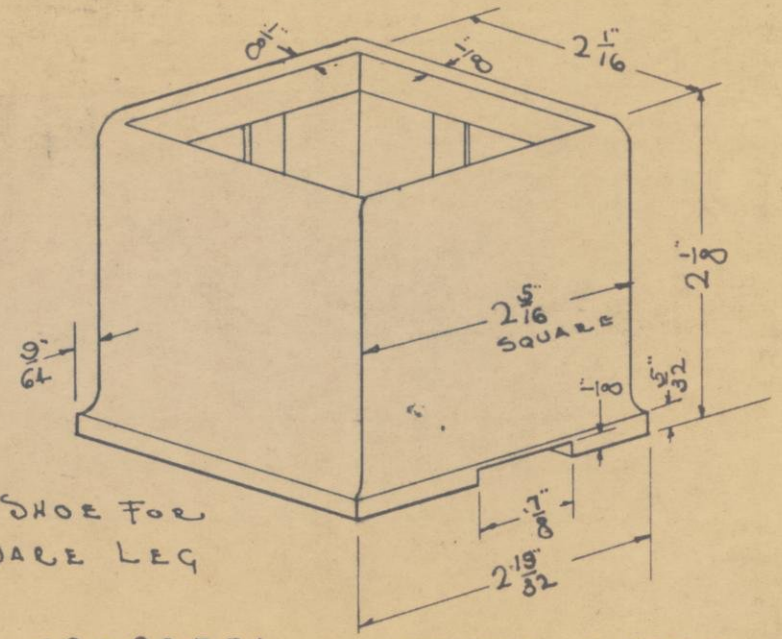

DATE-

CAST SHOE FOR
2" SQUARE LEG

SEE B. P. NO. 0023781.

[redacted] NO. 1523
PATTERN.

HAMILTON MFG. CO.

DO NOT REMOVE THIS LEAF FROM BOOK

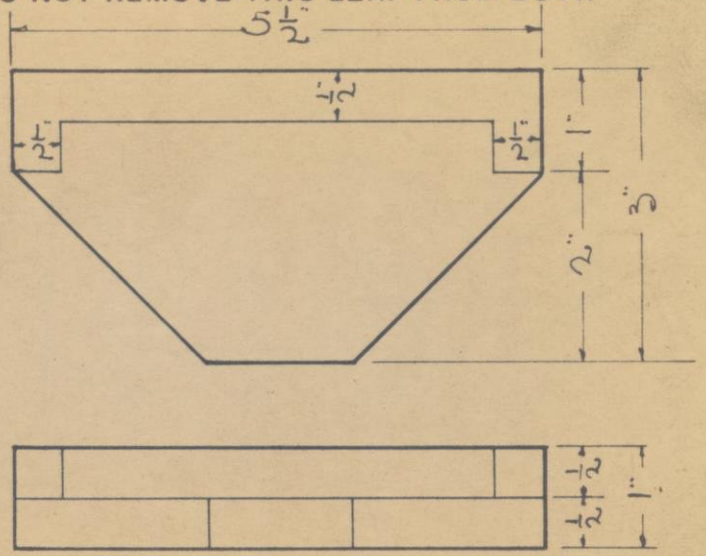

CAST IRON SHOE

DATE-

SEE B. P. NO. 0023796 PATTERN NO. 1524

HAMILTON MFG. CO.

DO NOT REMOVE THIS LEAF FROM BOOK

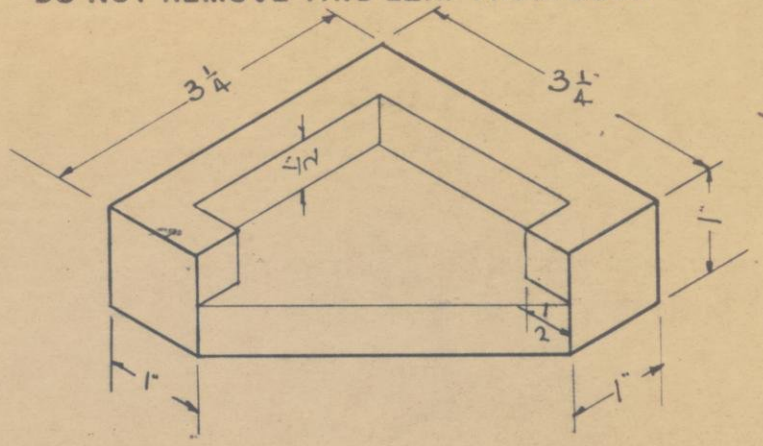

CAST IRON SHOE.

DATE-

SEE B. P. NO. 0023792 PATTERN NO. 1525

HAMILTON MFG. CO.

DO NOT REMOVE THIS LEAF FROM BOOK

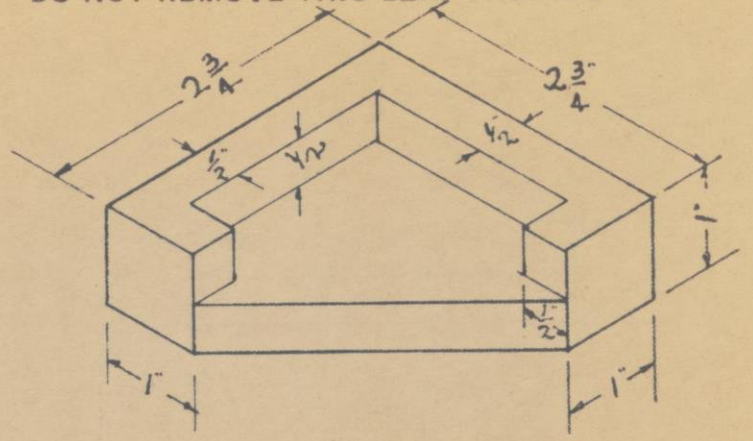

CAST IRON SHOE

DATE- 4-2-40

SEE B. P. NO. 0023788 PATTERN NO. 1526

HAMILTON MFG. CO.

DO NOT REMOVE THIS LEAF FROM BOOK

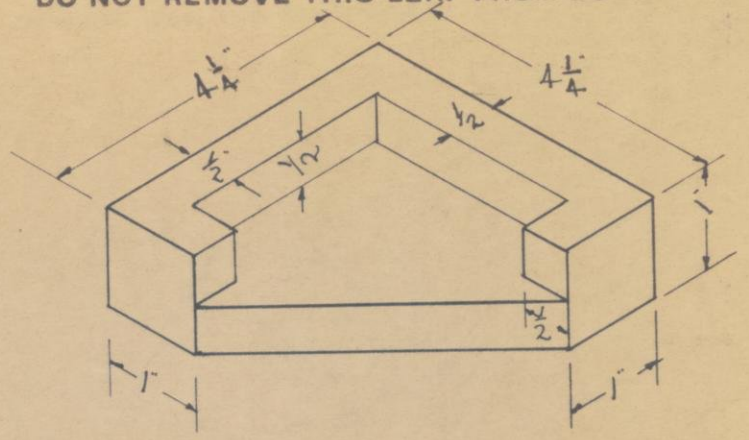

CAST IRON SHOE

DATE-

SEE B. P. NO. L0023796-A. PATTERN NO. 1527

HAMILTON MFG. CO.

DO NOT REMOVE THIS LEAF FROM BOOK.

DATE- 5-2-40

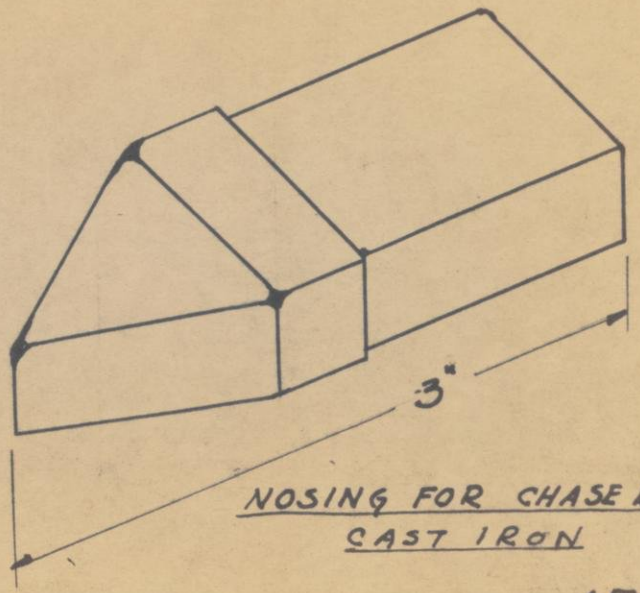

NOSING FOR CHASE RACKS
CAST IRON

SEE B. P. NO. 0023707-B

PATTERN NO. 1528

HAMILTON MFG. CO.

DO NOT REMOVE THIS LEAF FROM BOOK

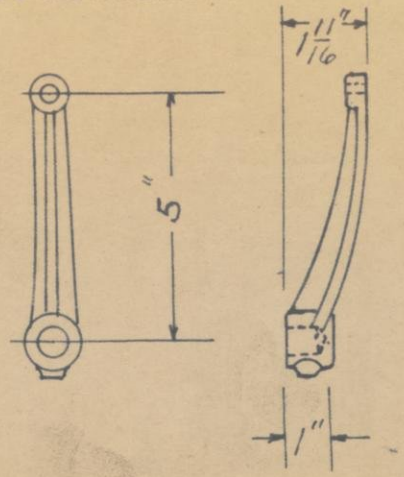

DATE- 7-16-40

CRANK FOR RAISING DEVICE
ON NO. 410 DRAWING TABLE
MATERIAL - CAST IRON

SEE B. P. NO. 410-R A

PATTERN NO. 1529

HAMILTON MFG. CO.

DO NOT REMOVE THIS LEAF FROM BOOK

DATE-

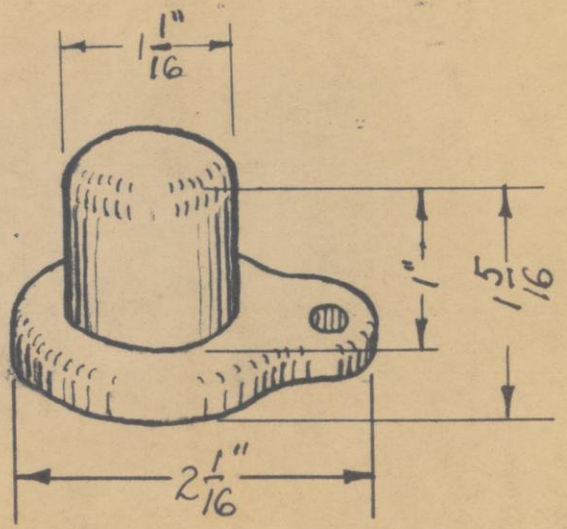

CAST IRON SHOE

SEE B. P. NO. 410-X-K PATTERN NO. 1531

HAMILTON MFG. CO.

DO NOT REMOVE THIS LEAF FROM BOOK

NOTE! EXCEPT FOR HOLE FOR SET SCREW, THERE IS TO BE NO MACHINING

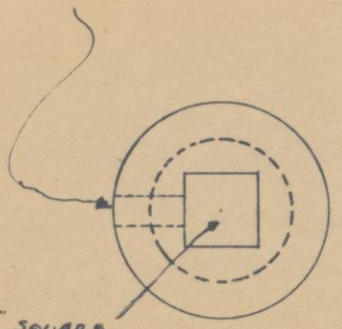

DRILL AND TAP FOR 8-32 x 1/2" SHAKE PROOF CUP POINTED SET SCREW. -FURNISH SCREW-

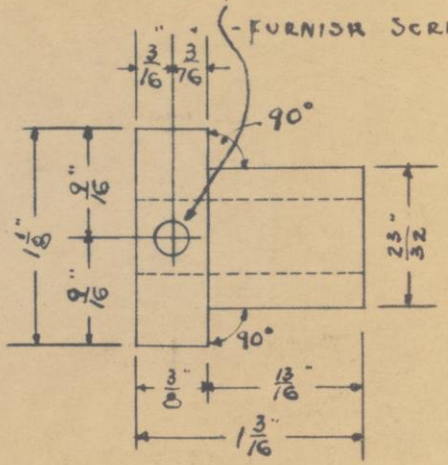

DATE-

CAST IRON BUSHING.

(FOR BAFFLE REMOTE CONTROL RODS)

SEE B. P. NO. LH-33758-A

PATTERN NO. 1532

HAMILTON MFG. CO.

DO NOT REMOVE THIS LEAF FROM BOOK

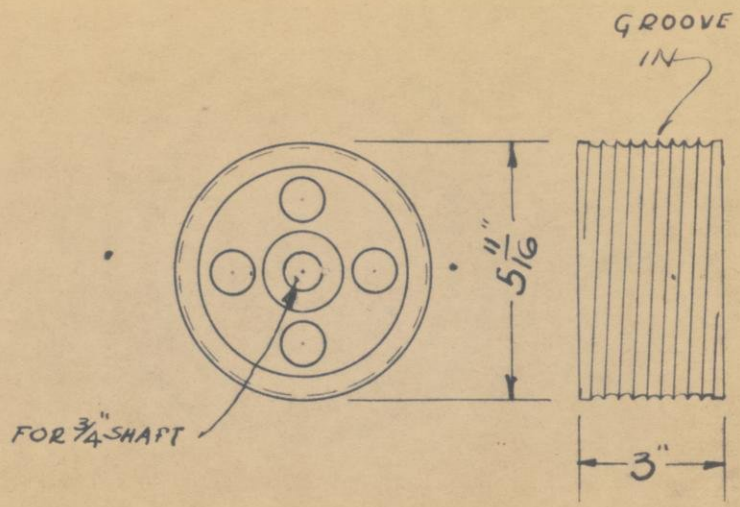

DATE- 7-8-40

GROOVED HOISTING SHEAVE

SEE B. P. NO. 0023981-B PATTERN NO. 1533

HAMILTON MFG. CO.

DO NOT REMOVE THIS LEAF FROM BOOK

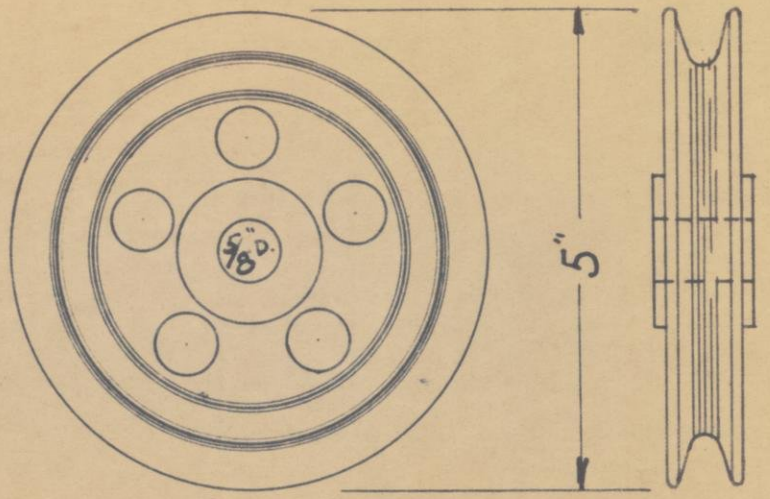

DATE- 8-5-40

5" SHEAVE FOR 1/4" WIRE ROPE

SEE B. P. NO. 0023981-D

PATTERN NO. 1534

HAMILTON MFG. CO.

DO NOT REMOVE THIS LEAF FROM BOOK

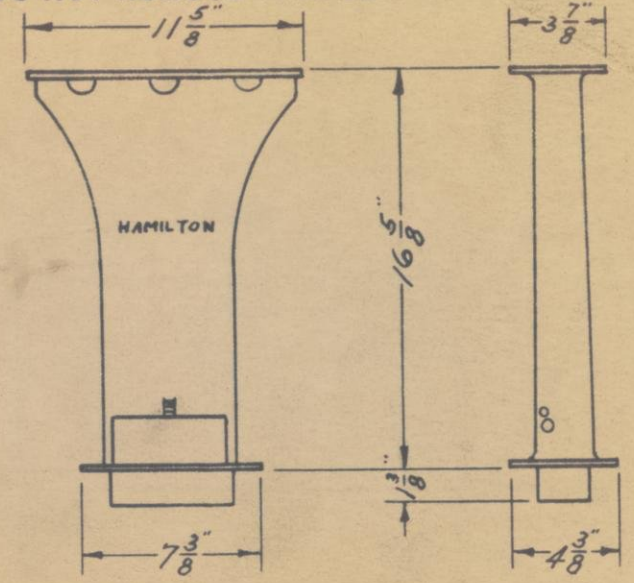

DATE- 11-26-40

See B.P. D-320512

STACK FOR FUME HOOD

SEE B. P. NO. L-1082-A PATTERN NO. 1535

HAMILTON MFG. CO.

DO NOT REMOVE THIS LEAF FROM BOOK

DATE- 11-26-40

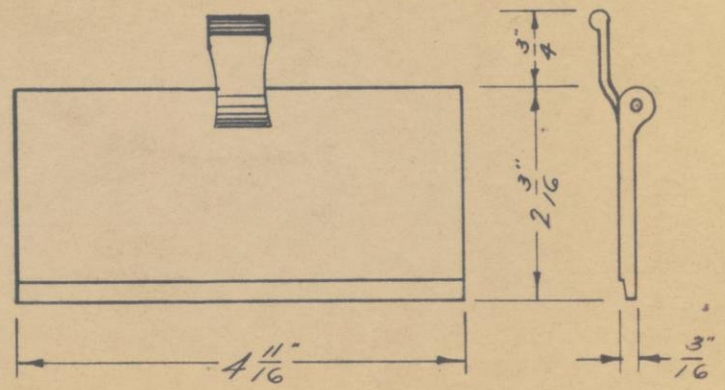

DAMPER FOR FUME HOOD

SEE B. P. NO. L-1082-A PATTERN NO. 1536

HAMILTON MFG. CO.

DO NOT REMOVE THIS LEAF FROM BOOK

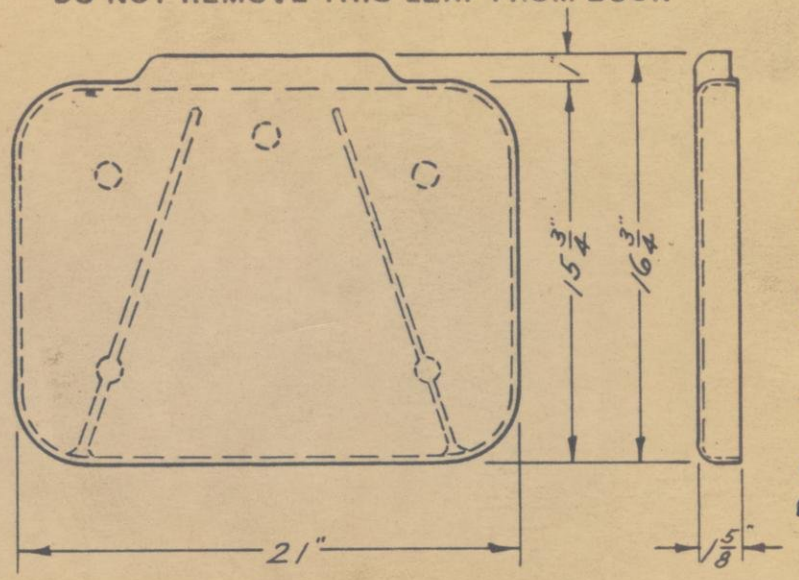

DATE- 11-26-40

OUTSIDE TOP FOR FUME HOOD

See RP, D-3205514

SEE B. P. NO. L-1082-B PATTERN NO. 1537

HAMILTON MFG. CO.

DO NOT REMOVE THIS LEAF FROM BOOK

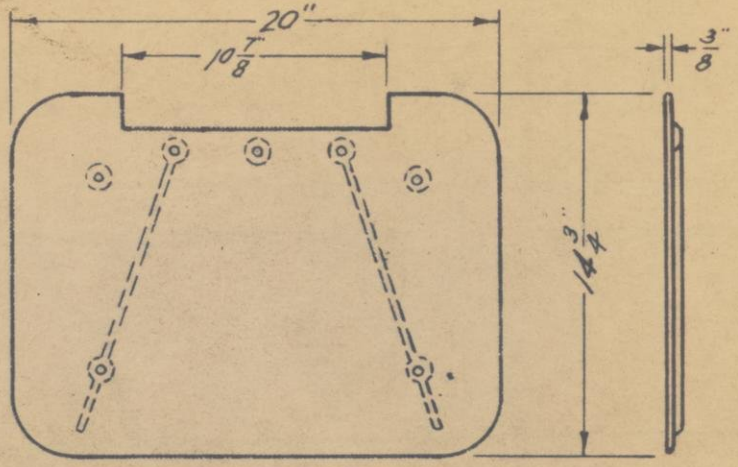

DATE- 11-26-40

INSIDE TOP FOR FUME HOOD

See B.P. D-320516

SEE B. P. NO. L-1082-C PATTERN NO. 1538

HAMILTON MFG. CO.

DO NOT REMOVE THIS LEAF FROM BOOK

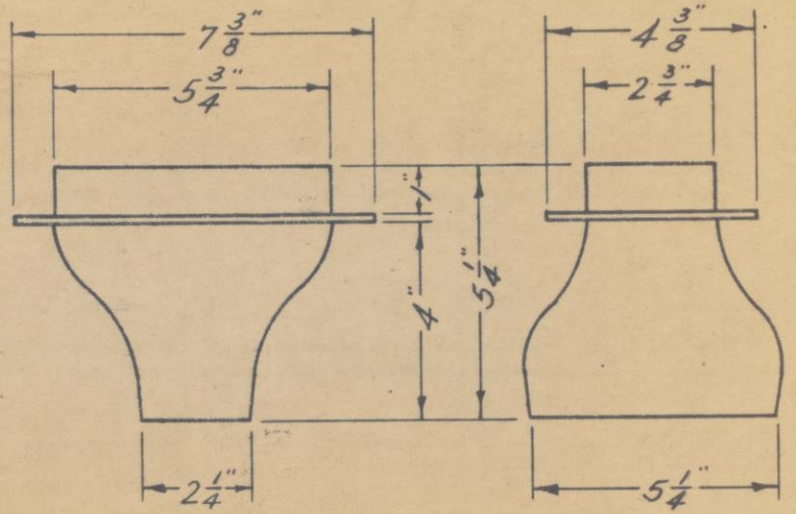

DATE- 11-26-40

CONNECTOR FOR STACK ON FUME HOOD

SEE B. P. NO. L-1082-D PATTERN NO. 1539

HAMILTON MFG. CO.

DO NOT REMOVE THIS LEAF FROM BOOK

DATE- 9-24-40

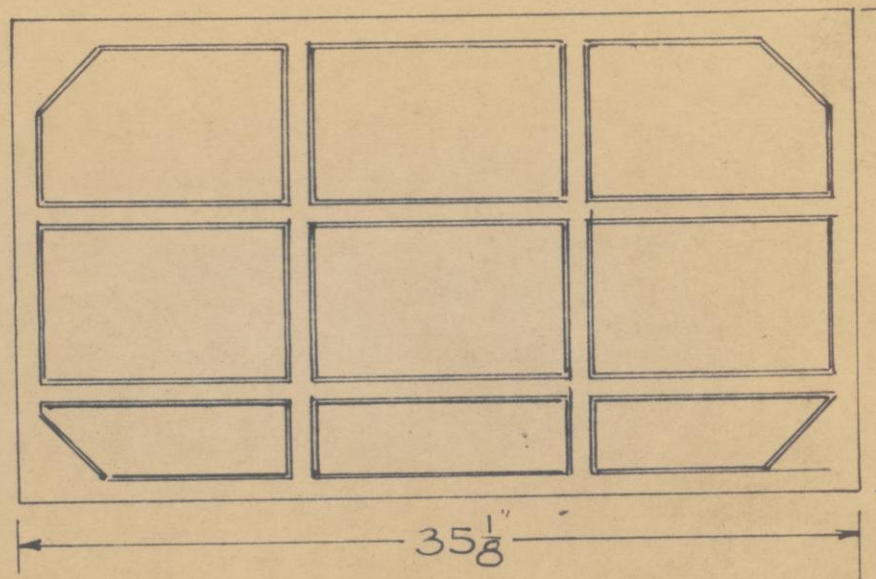

IRON TOP FOR TYPE CABINET

SEE B. P. NO. 0024174-E

PATTERN NO. 1540

HAMILTON MFG. CO.

DO NOT REMOVE THIS LEAF FROM BOOK

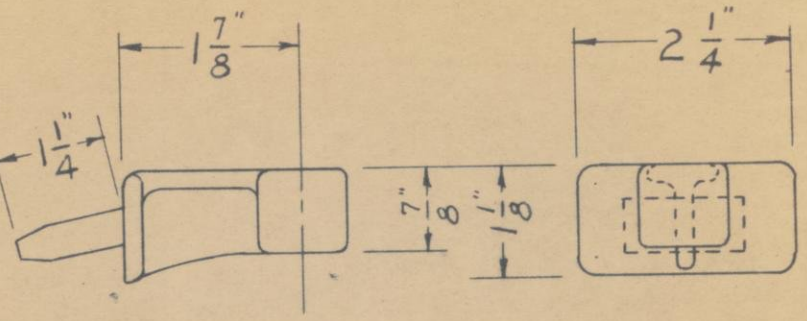

DATE- 10-4-40 P.F.J.

BRACKET FOR ARM

CAST IRON

SEE B. P. NO. 9544 PATTERN NO. 1541

HAMILTON MFG. CO.

DO NOT REMOVE THIS LEAF FROM BOOK

DATE- 10-4-40 P.F.U.

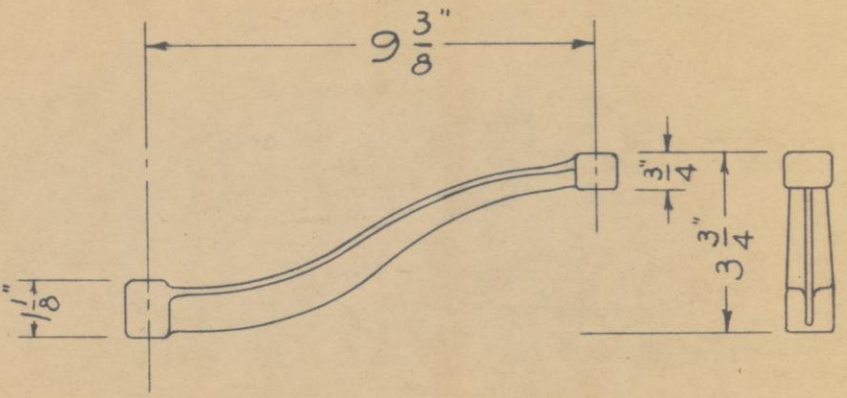

ARM FOR TRAY

CAST IRON

SEE B. P. NO. 9544 PATTERN NO. 1542

HAMILTON MFG. CO.

DO NOT REMOVE THIS LEAF FROM BOOK

OK

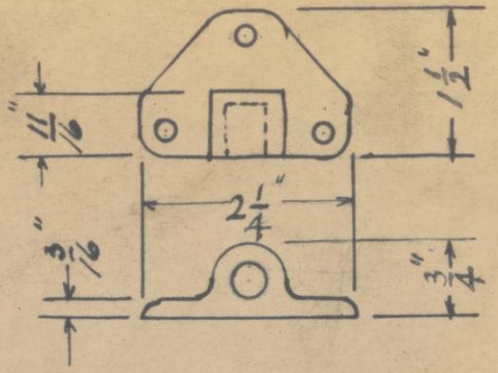

2 BRACKETS REQ'D.
FOR ALL PURPOSE EXAM TABLES

DATE-

9460 C

SEE B. P. NO. 9820 / 9821 } AP-B PATTERN NO. 1543

HAMILTON MFG. CO.

DO NOT REMOVE THIS LEAF FROM BOOK

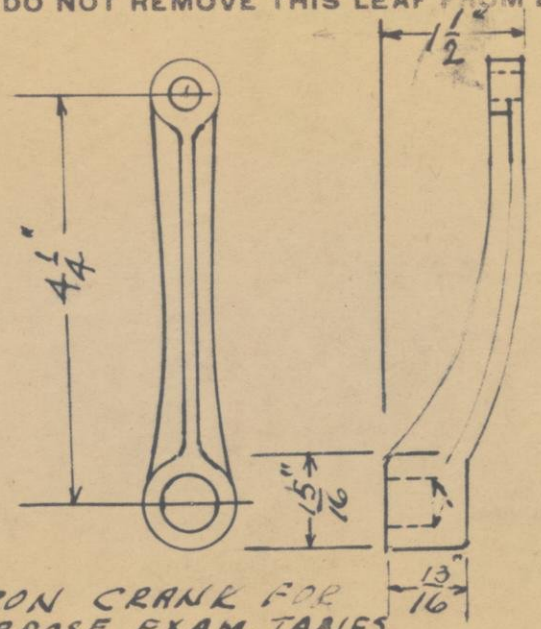

DATE-

CAST IRON CRANK FOR
ALL-PURPOSE EXAM. TABLES
1 REQ'D PER TABLE

SEE B. P. NO. 9820 } AP-C
9821 }

PATTERN NO. 1544

1

HAMILTON MFG. CO.

DO NOT REMOVE THIS LEAF FROM BOOK

OK

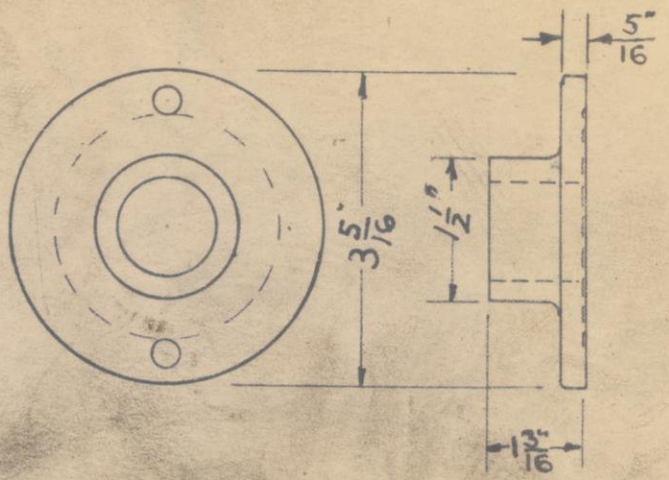

DATE- 10 25-40

BEARING FLANGE FOR 15221X CAB'T.

SEE B. P. NO. 15221XD

PATTERN NO. 1545

HAMILTON MFG. CO.

DO NOT REMOVE THIS LEAF FROM BOOK

OK

DATE- 12-2-40.

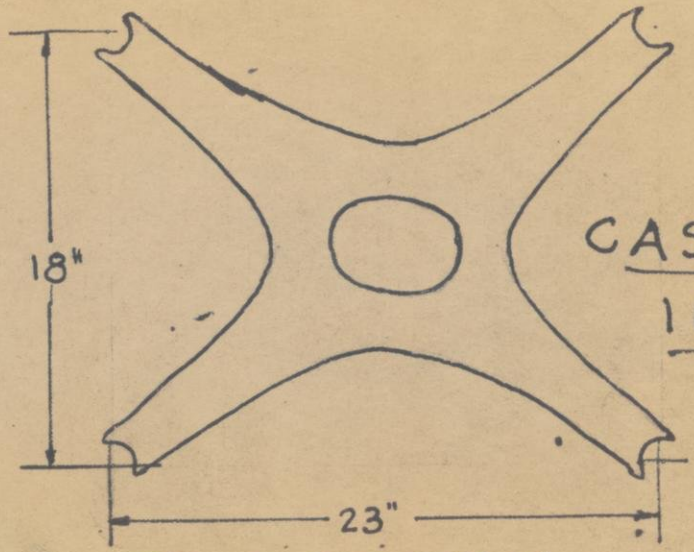

CAST IRON

FRAME FOR TRUCK

SEE B. P. NO. 579-C

PATTERN NO. 1546

HAMILTON MFG. CO.

DO NOT REMOVE THIS LEAF FROM BOOK

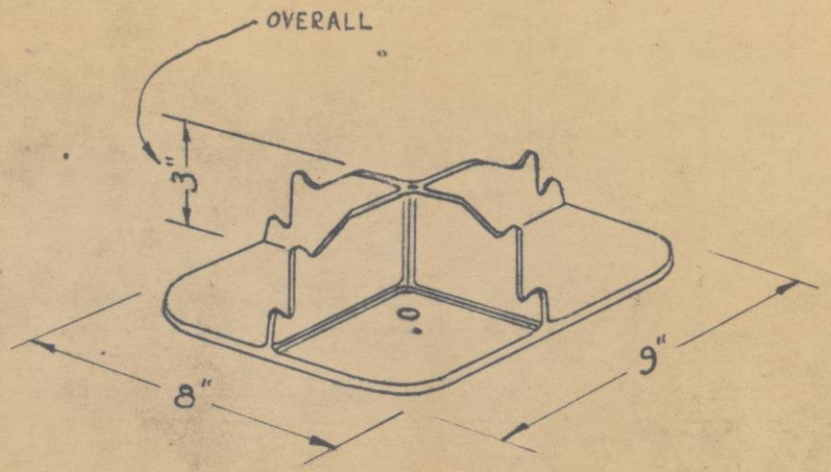

DATE- 1-28-41

SEE B. P. NO. L-780

PATTERN NO. 1547

HAMILTON MFG. CO.

DO NOT REMOVE THIS LEAF FROM BOOK

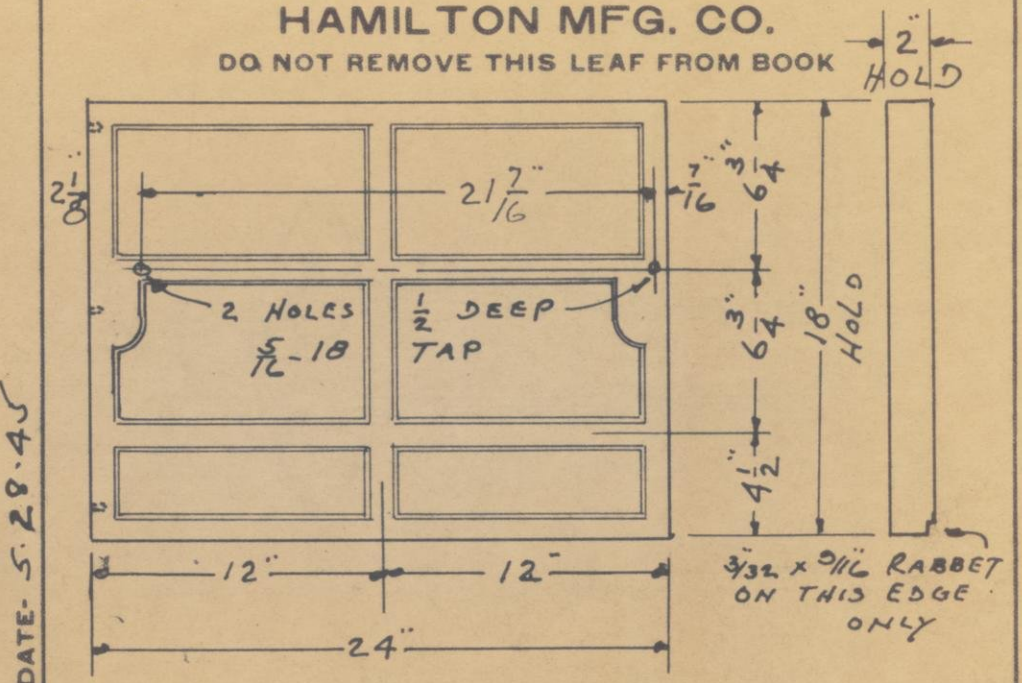

DATE- 5.28.45

18" X 24" IRON TOP

SEE B. P. NO. 0024203-B

PATTERN NO. 1548

HAMILTON MFG. CO.

DO NOT REMOVE THIS LEAF FROM BOOK

DATE- Rec'd 2-3-41

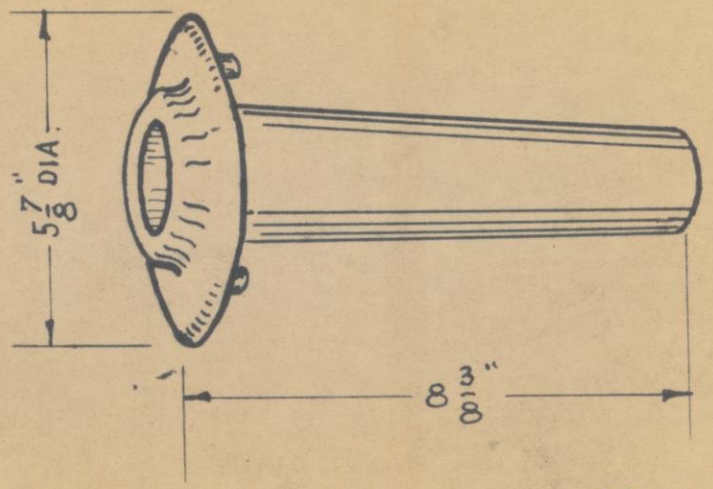

MATERIAL CAST IRON

SEE B. P. NO. 9505-A-F-W PATTERN NO. 1549

HAMILTON MFG. CO.

DO NOT REMOVE THIS LEAF FROM BOOK

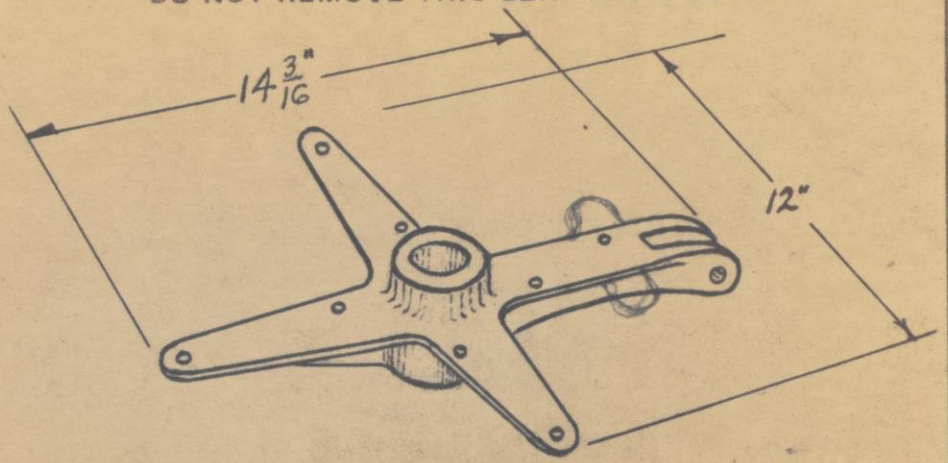

MATERIAL CAST IRON

SEE B. P. NO. 9505-A-M-W PATTERN NO. 1550

DATE- LEB 2-5-41

HAMILTON MFG. CO.

DO NOT REMOVE THIS LEAF FROM BOOK

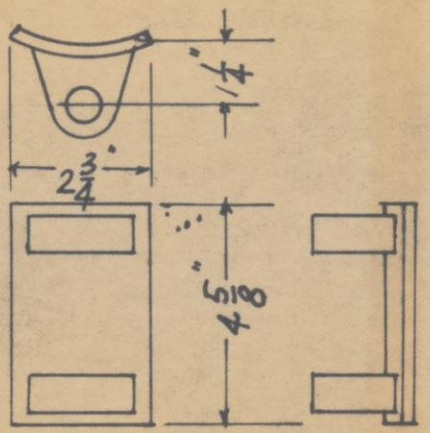

DATE- 2-5-41

SWING ARM BRACKETS
FOR TABLE PER B.P. 0024517

SEE B. P. NO. 0024517-B PATTERN NO. 1552

HAMILTON MFG. CO.

DO NOT REMOVE THIS LEAF FROM BOOK

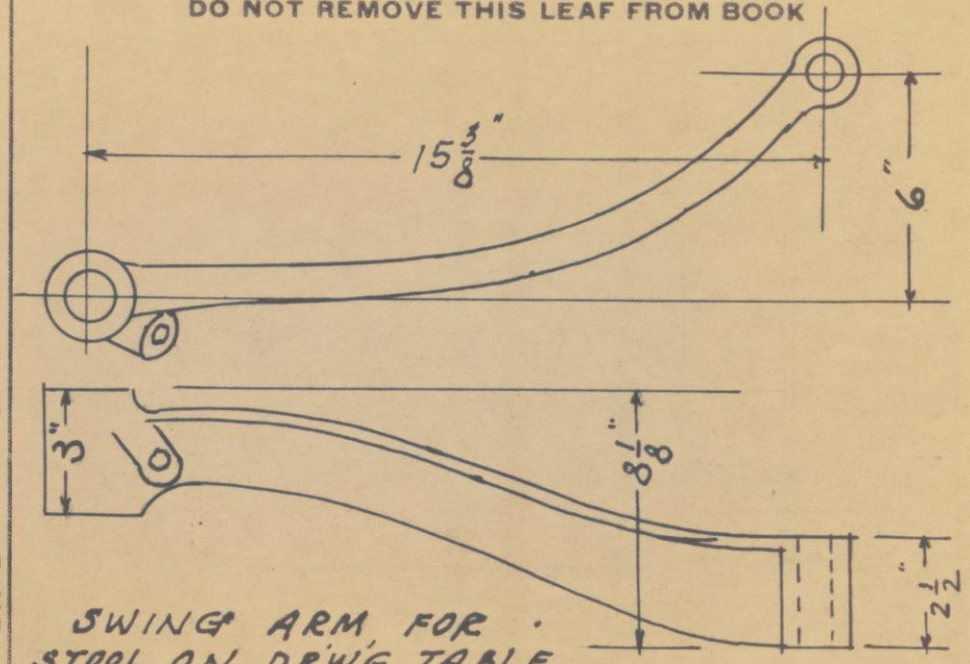

DATE- 2-5-41

SWING ARM FOR
STOOL ON DRW'G TABLE
PER B.P. 0024517

SEE B. P. NO. 0024517-B

PATTERN NO. 1553

HAMILTON MFG. CO.

DO NOT REMOVE THIS LEAF FROM BOOK

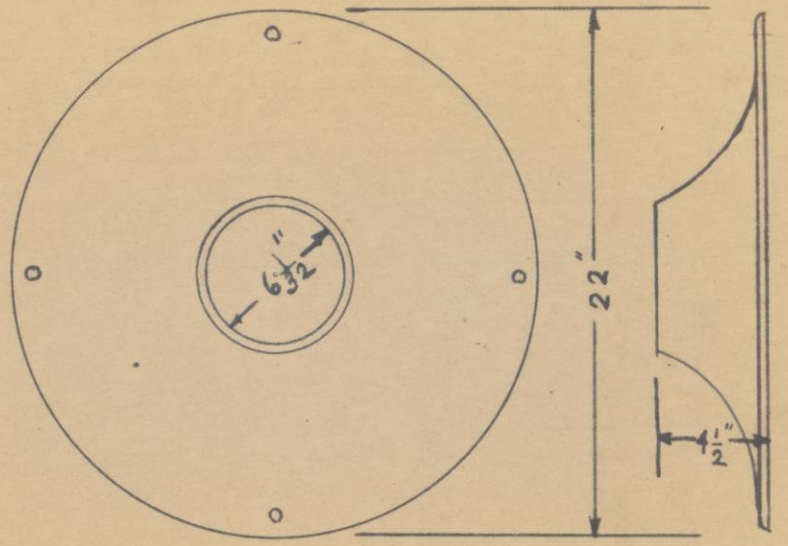

DATE- 2-5-41

CAST IRON BASE FOR
DRAWING TABLE PER B.P.#0024517

SEE B. P. NO. 0024517-C PATTERN NO. 1554

HAMILTON MFG. CO.

DO NOT REMOVE THIS LEAF FROM BOOK

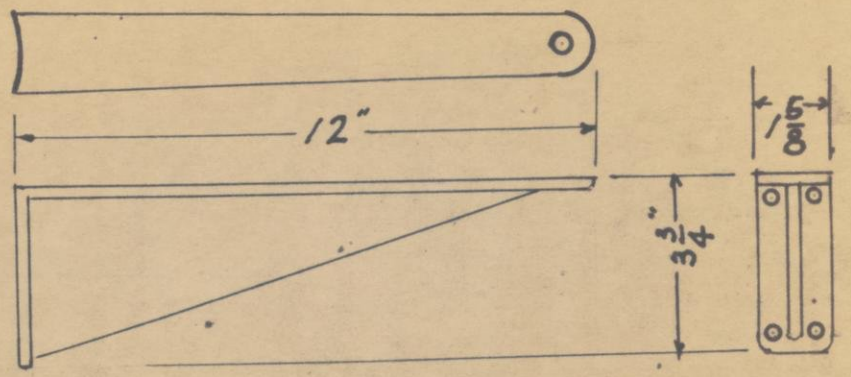

DATE- 2-5-41

TABLE BRACKETS

SEE B. P. NO. 0024517-C PATTERN NO. 1555

HAMILTON MFG. CO.

DO NOT REMOVE THIS LEAF FROM BOOK

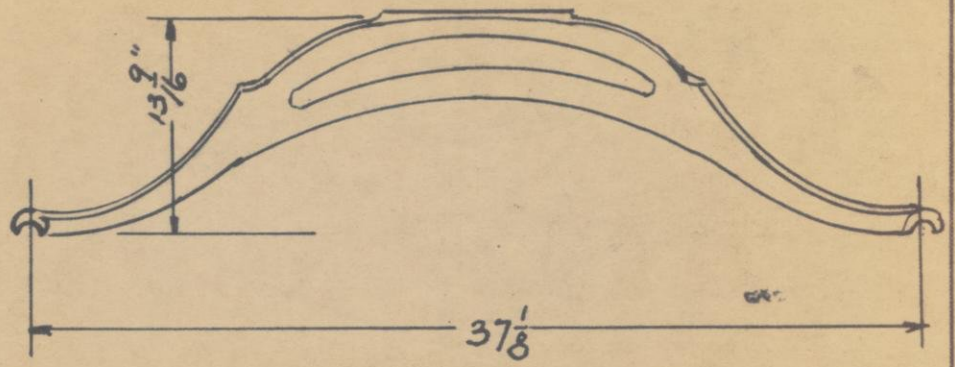

DATE-

BRACE FOR NO. 410-415-X
DRAWING TABLES

SEE B. P. NO 410-XL

PATTERN NO. 1556

HAMILTON MFG. CO.

DO NOT REMOVE THIS LEAF FROM BOOK

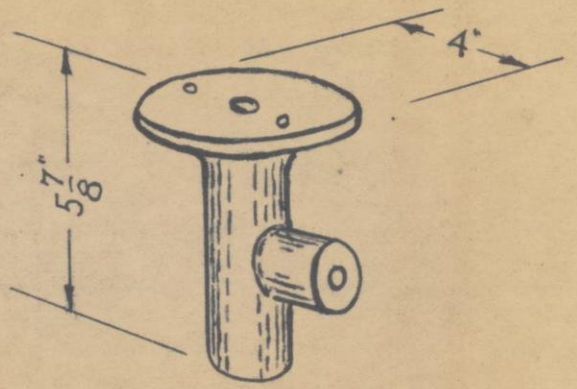

CAST IRON SOCKET FOR

TILTING DEVICE FOR DRAWING TABLES

SEE B. P. NO. 0024727-A PATTERN NO. 1557

DATE- [illegible] 3-24-41

HAMILTON MFG. CO.

DO NOT REMOVE THIS LEAF FROM BOOK

DATE- 4-10-44

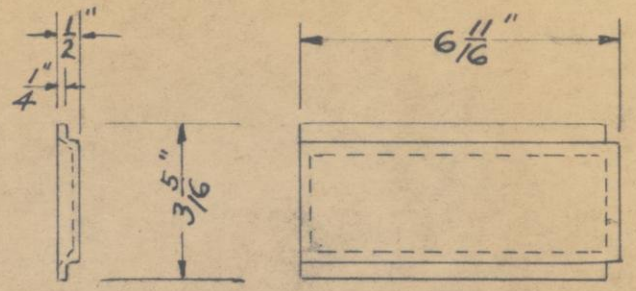

COVER FOR FUME HOOD SOCKET
CAST ALUMINUM

SEE B. P. NO. L-1082-E PATTERN NO. 1558

HAMILTON MFG. CO.

DO NOT REMOVE THIS LEAF FROM BOOK

DATE- Eff. 4-12-41

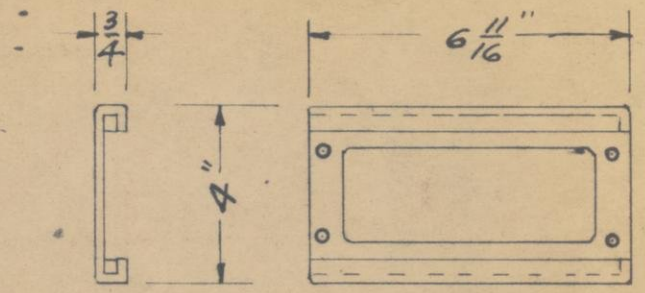

SOCKET FOR FUME HOOD
CAST ALUMINUM

SEE B. P. NO. L-1082-E

PATTERN NO. 1559

HAMILTON MFG. CO.

DO NOT REMOVE THIS LEAF FROM BOOK

OK

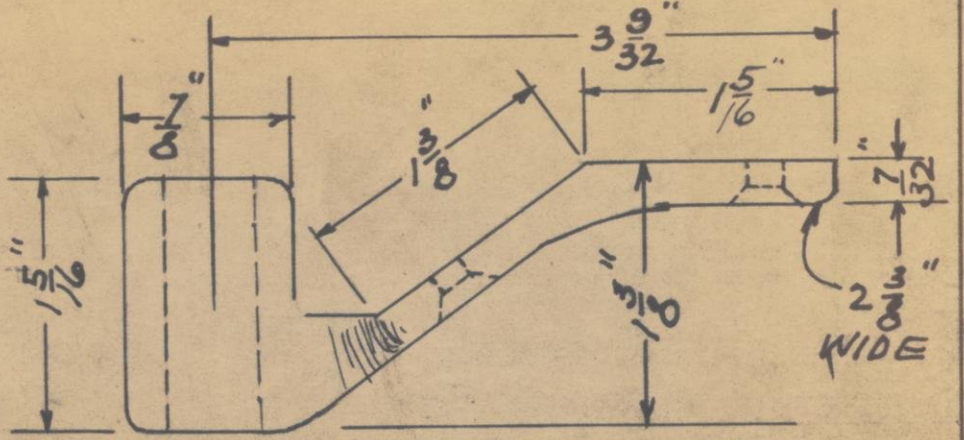

ARM REST BRACKET
CAST IRON

SEE B. P. NO. 9543-B PATTERN NO. 1560

CHANGE: WAS MALLEABLE IRON 1-15-42 P.F.J.
DATE

HAMILTON MFG. CO.

DO NOT REMOVE THIS LEAF FROM BOOK

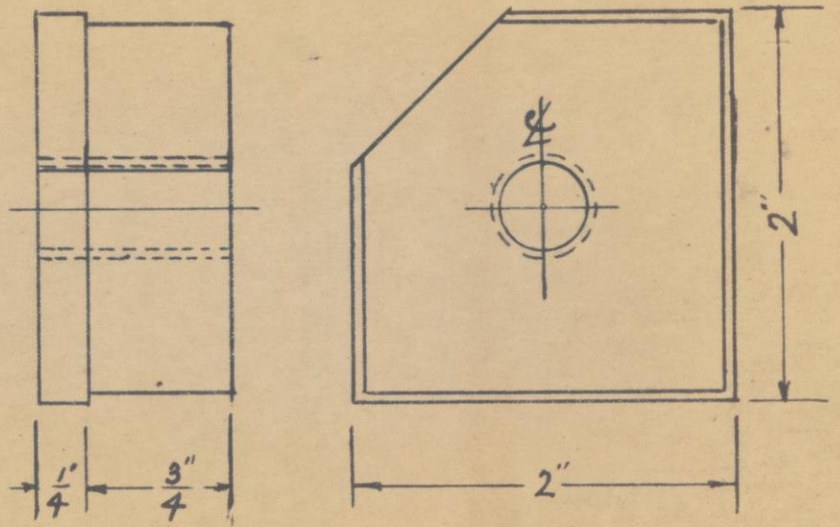

LEG INSERT MATERIAL - CAST IRON LEADCOATED

SEE B. P. NO. L-0024683-B PATTERN NO. 1561

L. O. G. DATE - 4-29-41

HAMILTON MFG. CO.

DO NOT REMOVE THIS LEAF FROM BOOK

DATE- 5-13-41 DER.

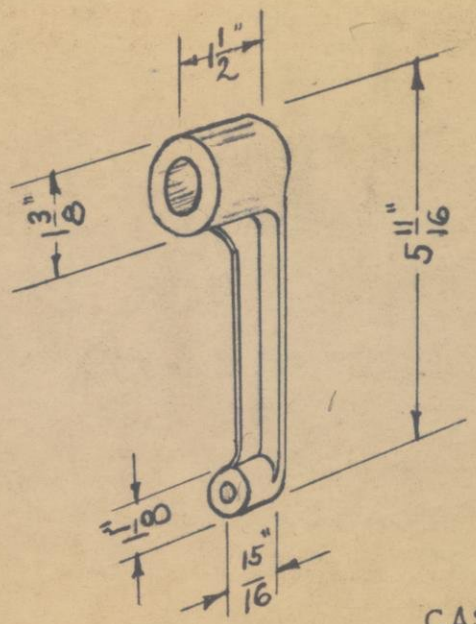

CRANK
CAST IRON

211-216 A

SEE B. P. NO. 0024876-A PATTERN NO. 1562

HAMILTON MFG. CO.

DO NOT REMOVE THIS LEAF FROM BOOK

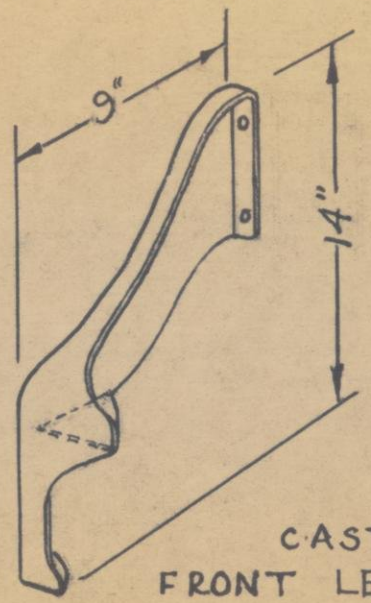

DATE-5-19-41

CAST IRON
FRONT LEG & FOOT
REST SUPPORT FOR AUTOSHIFT T.
MADE RIGHT & LEFT

SEE B. P. NO. 0024898 PATTERN NO. 1563

HAMILTON MFG. CO.

DO NOT REMOVE THIS LEAF FROM BOOK

DATE- 6-3-41

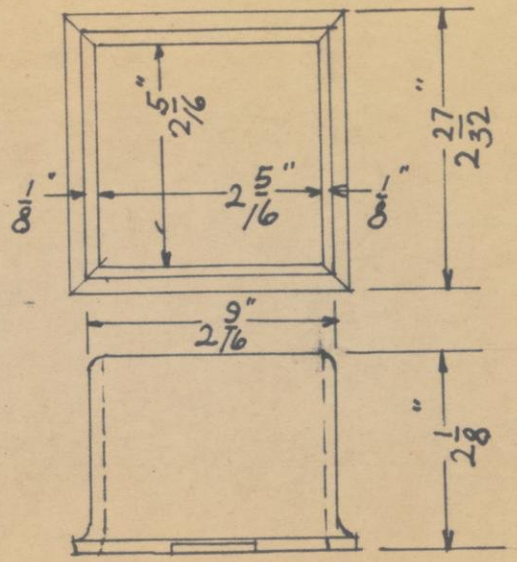

LEG SHOE

MATERIAL CAST BRONZE

SEE B. P. NO. 0024540-A PATTERN NO. 1564

HAMILTON MFG. CO.

DO NOT REMOVE THIS LEAF FROM BOOK

DATE- 6-2-41 P.F.J.

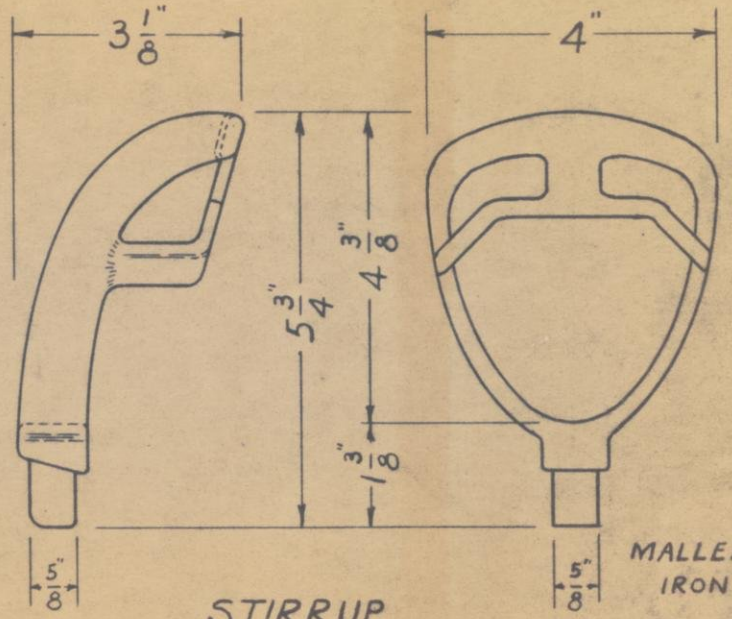

MALLEABLE IRON

STIRRUP

SEE B. P. NO. 9905-XKA PATTERN NO. 1565

HAMILTON MFG. CO.

DO NOT REMOVE THIS LEAF FROM BOOK

DATE- 7-25-41

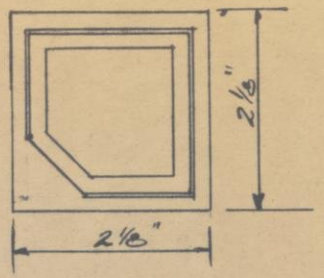

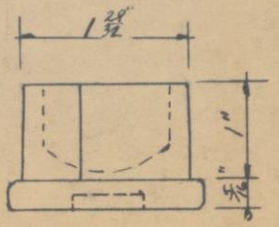

CAST IRON SHOE FOR VS1620 TABLE

SEE B. P. NO. VS 1620 X A PATTERN NO. 1567

HAMILTON MFG. CO.

DO NOT REMOVE THIS LEAF FROM BOOK

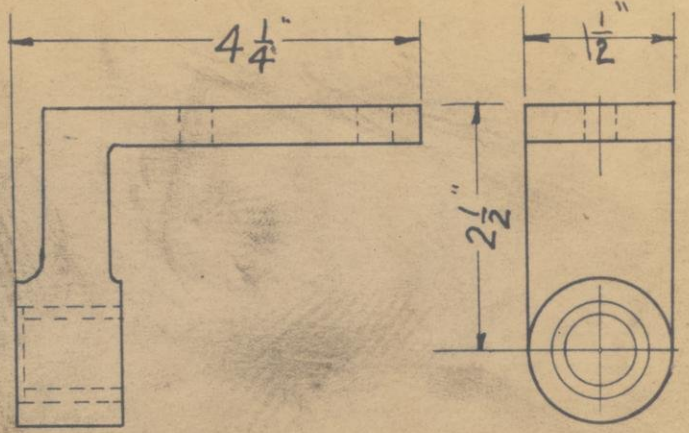

DATE- 8-26-41 G.R.C.

BEARING BRACKET
CAST IRON

SEE B. P. NO. 15221XB

PATTERN NO. 1568

HAMILTON MFG. CO.

DO NOT REMOVE THIS LEAF FROM BOOK

DATE- 5-28-45

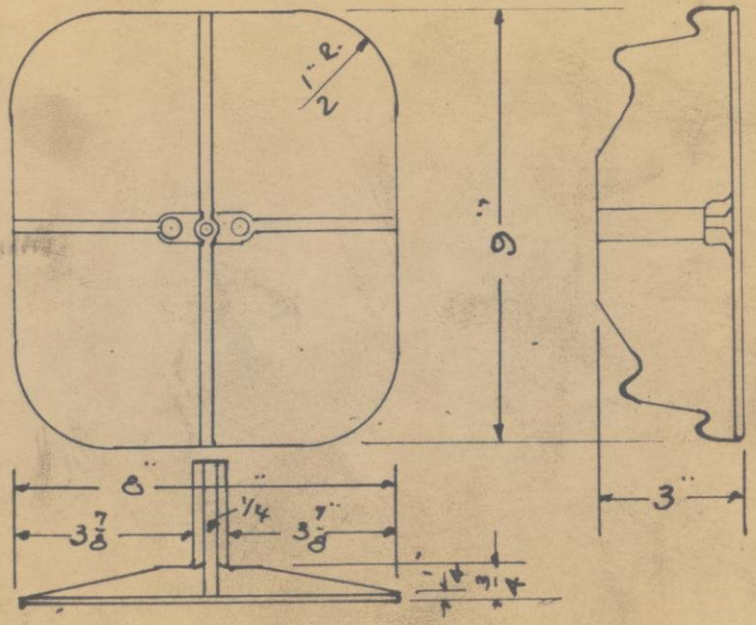

SEE B. P. NO. R-6030-A

PATTERN NO. 1569

3-004

HAMILTON MFG. CO.

DO NOT REMOVE THIS LEAF FROM BOOK

DATE 12-3-54 A. J. G.

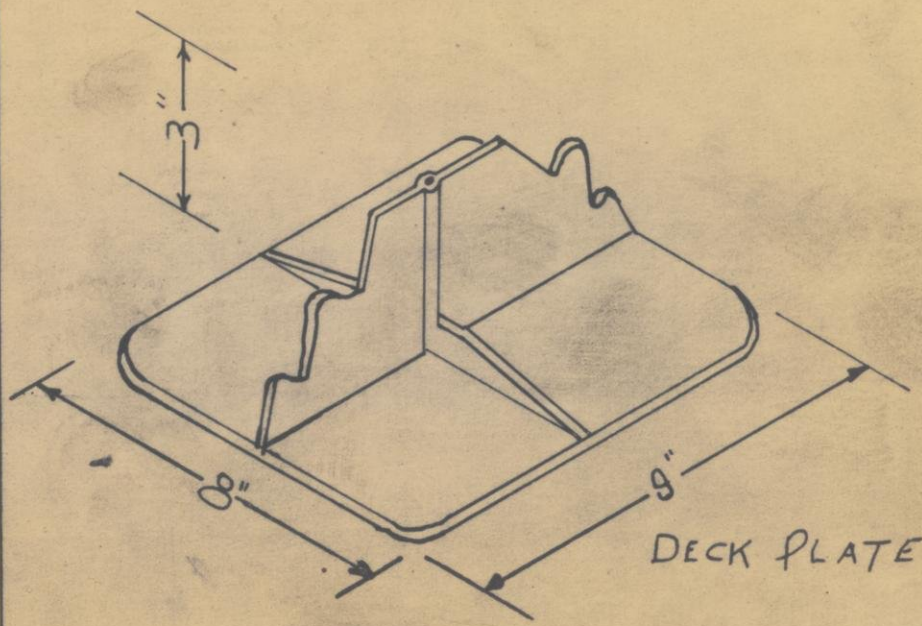

DECK PLATE

SEE B. P. NO. L0034341

PATTERN NO. 1569

POST NO. 120—500—7-15-53

HAMILTON MFG. CO.

DO NOT REMOVE THIS LEAF FROM BOOK

DATE- 5-20-45

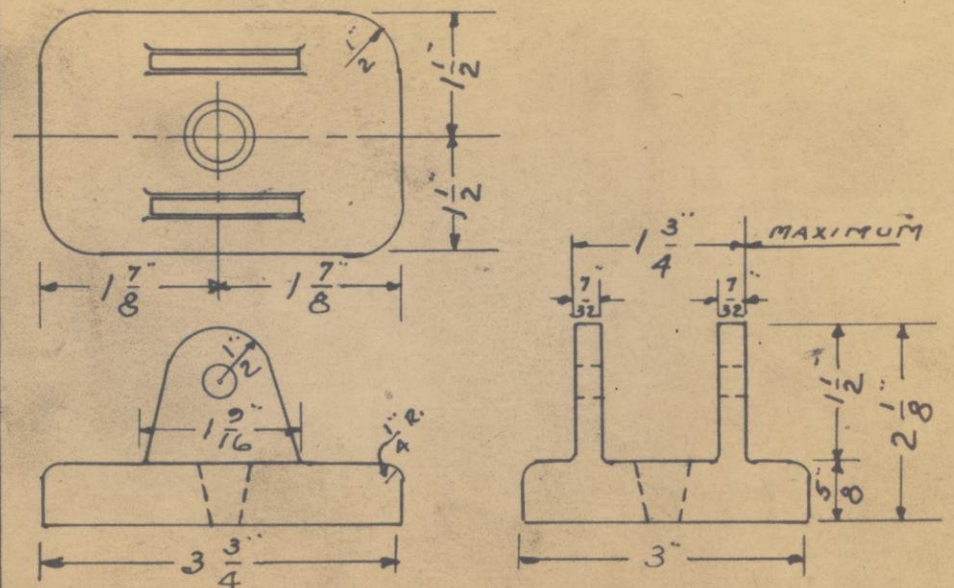

BOOKSTACK BASE PLATE

SEE B. P. NO. R-6030-B

PATTERN NO. 1570

HAMILTON MFG. CO.

DO NOT REMOVE THIS LEAF FROM BOOK

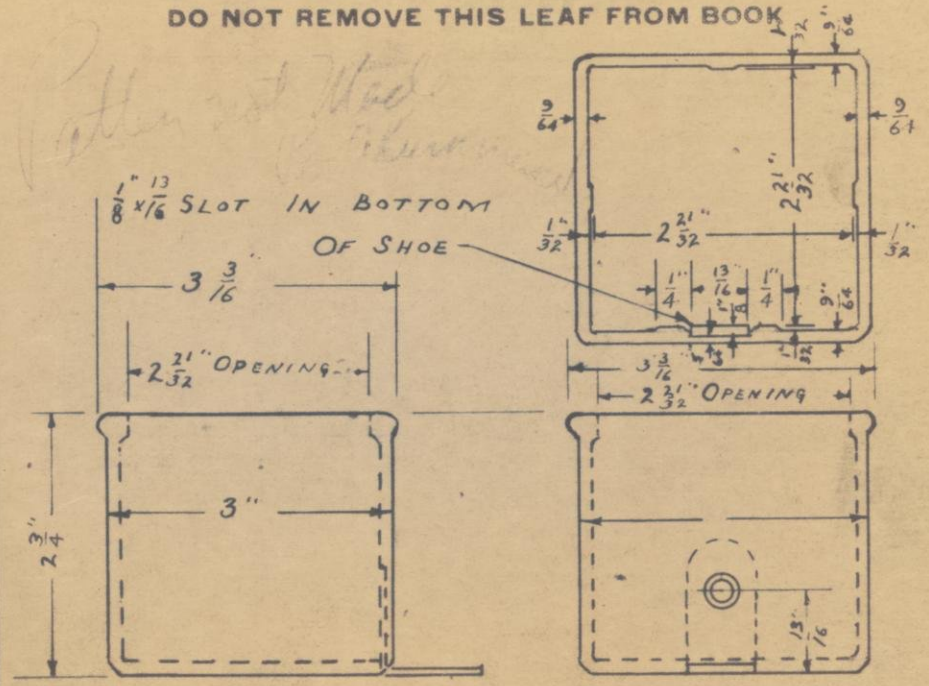

DATE-

SEE B. P. NO. LS-2002-A

PATTERN NO. 157

HAMILTON MFG. CO.

DO NOT REMOVE THIS LEAF FROM BOOK

DATE-

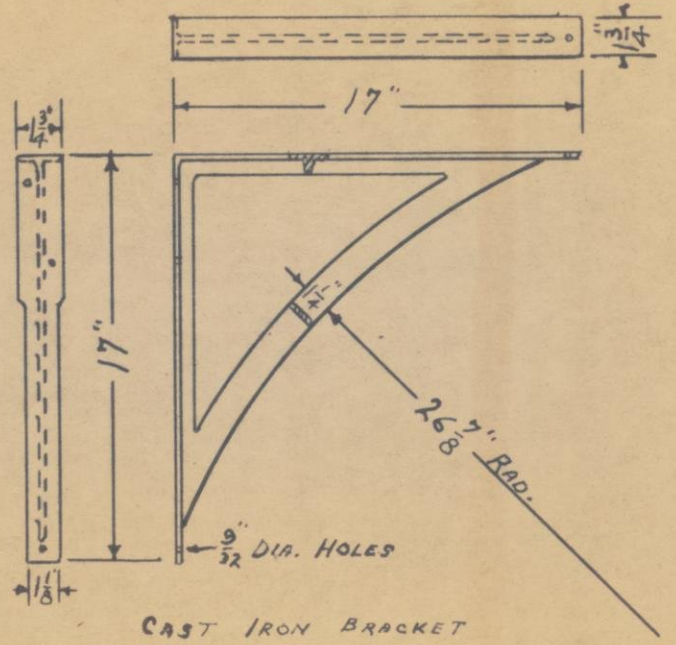

CAST IRON BRACKET

SEE B. P. NO. LS-2004-A

PATTERN NO. 1572

HAMILTON MFG. CO.

DO NOT REMOVE THIS LEAF FROM BOOK

DATE-

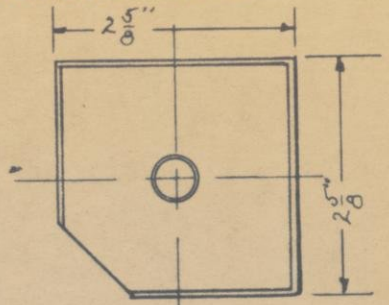

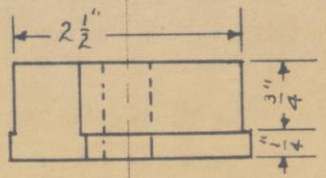

CAST IRON LEG INSERT

SEE B. P. NO. LS-2002-A

PATTERN NO. 1573

HAMILTON MFG. CO.

DO NOT REMOVE THIS LEAF FROM BOOK

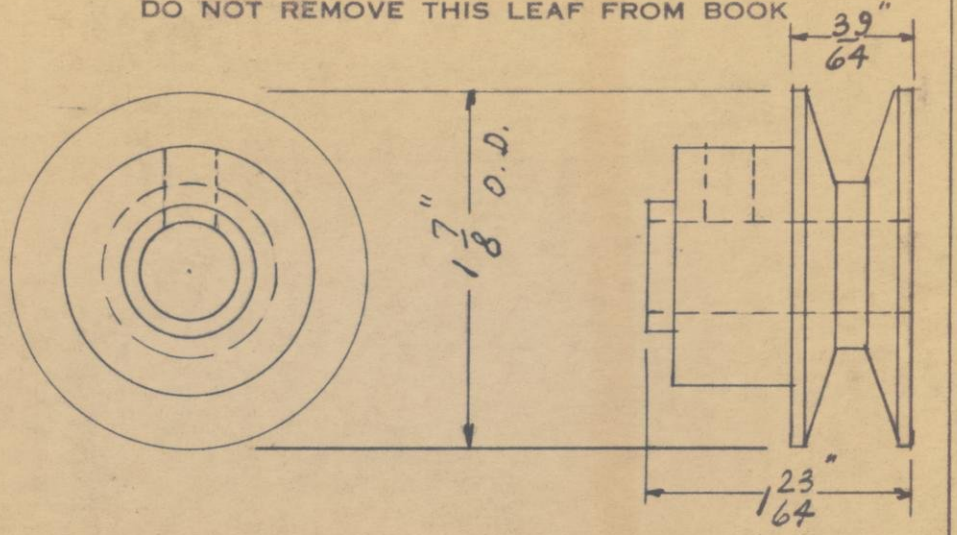

DATE-

DRIVER PULLEY

FOR NO 400E & 500G CLOTHES DRYER

MATERIAL - CAST IRON

SEE B. P. NO. 400E OR 500G 50 PAT. NO. 1575

HAMILTON MFG. CO.

DO NOT REMOVE THIS LEAF FROM BOOK

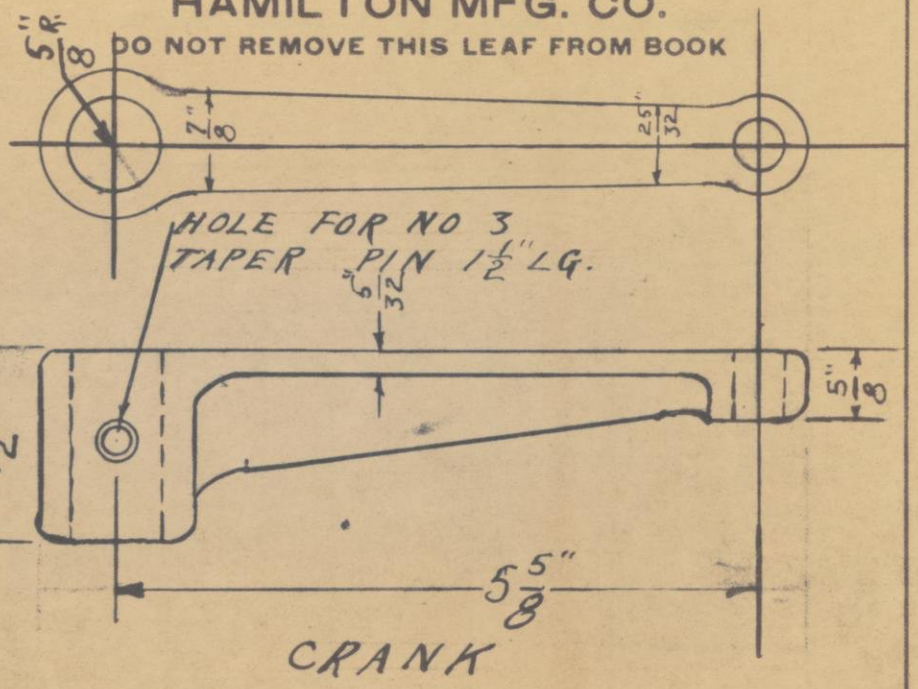

CRANK

DATE:

SEE B. P. NO. 217WC-4 PATTERN NO. 1576

HAMILTON MFG. CO.

DO NOT REMOVE THIS LEAF FROM BOOK

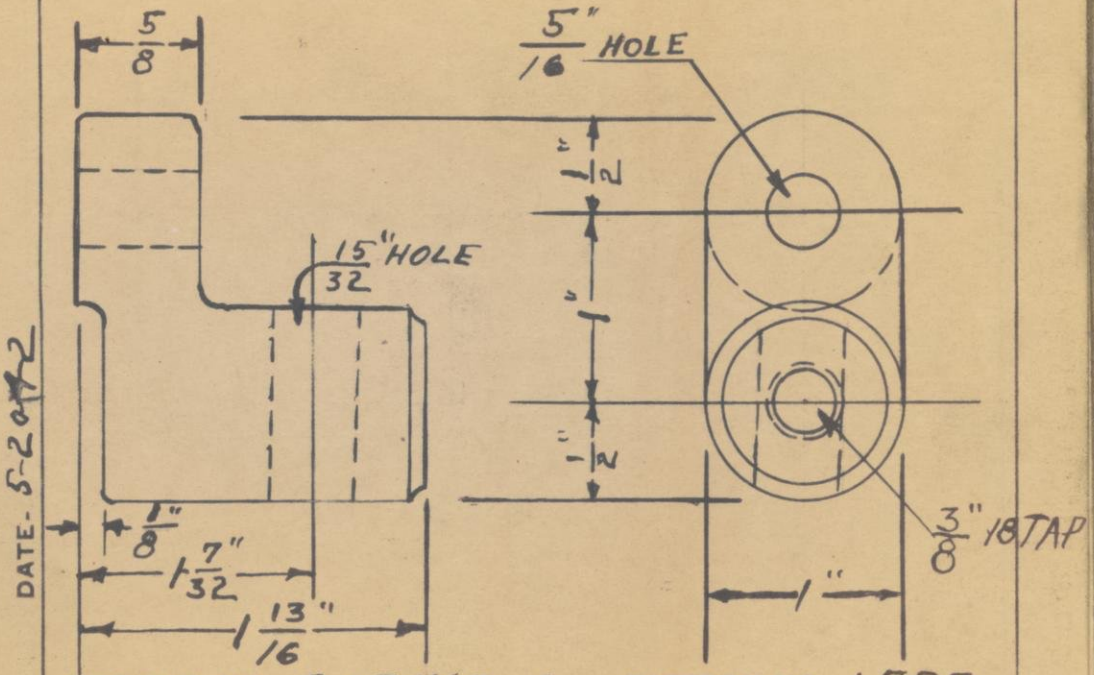

DATE- 5-20-42

SEE B. P. NO. 217WC-4

PATTERN NO. 1577

CLAMP BRACKET

HAMILTON MFG. CO.

DO NOT REMOVE THIS LEAF FROM BOOK

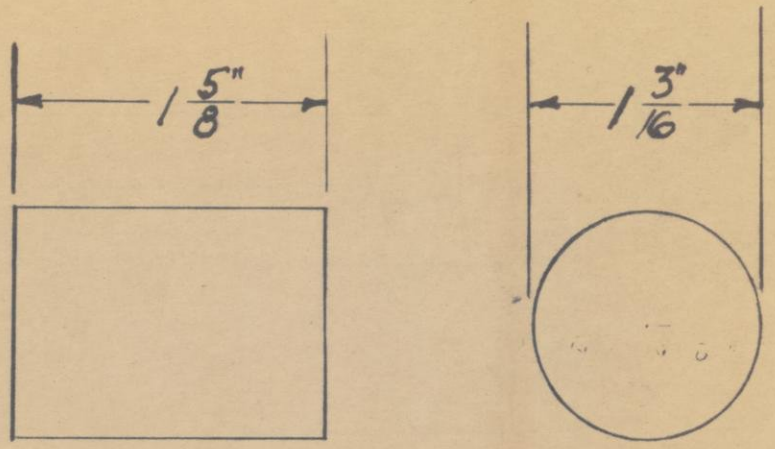

PLUG

DATE- 5-19-42

SEE B. P. NO. 1818W-B

PATTERN NO. 1578

HAMILTON MFG. CO.

DO NOT REMOVE THIS LEAF FROM BOOK

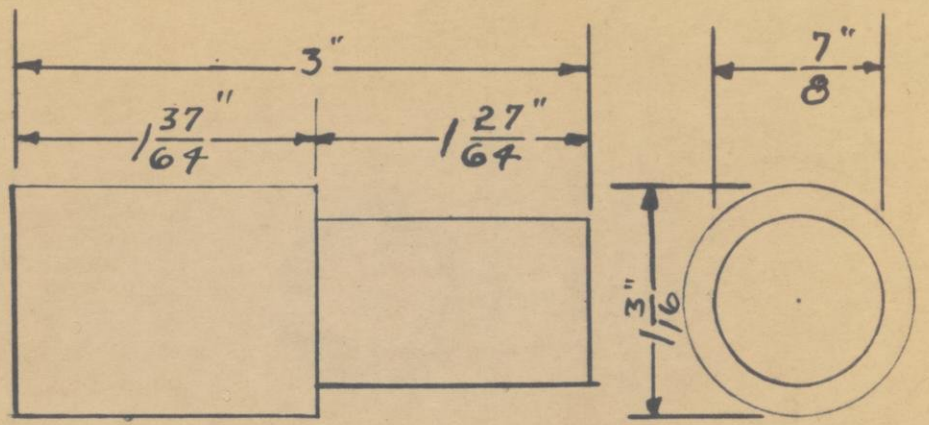

DATE 5-19-42

PLUG

SEE B. P. NO. 1818W-B

PATTERN NO. 1579

HAMILTON MFG. CO.

DO NOT REMOVE THIS LEAF FROM BOOK

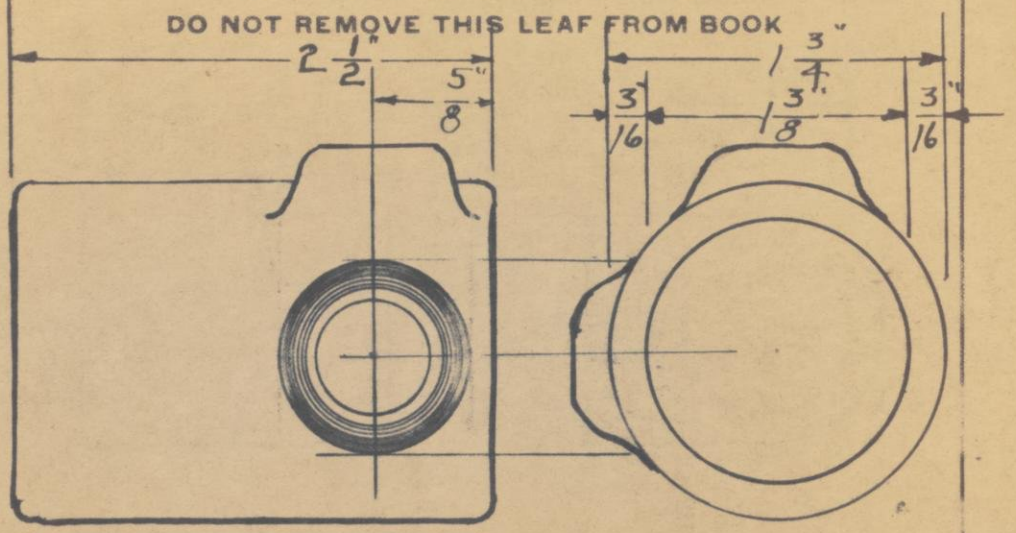

DATE 5-20-42

COUPLING

SEE B. P. NO. 1818W-B PATTERN NO. 1580

HAMILTON MFG. CO.

DO NOT REMOVE THIS LEAF FROM BOOK

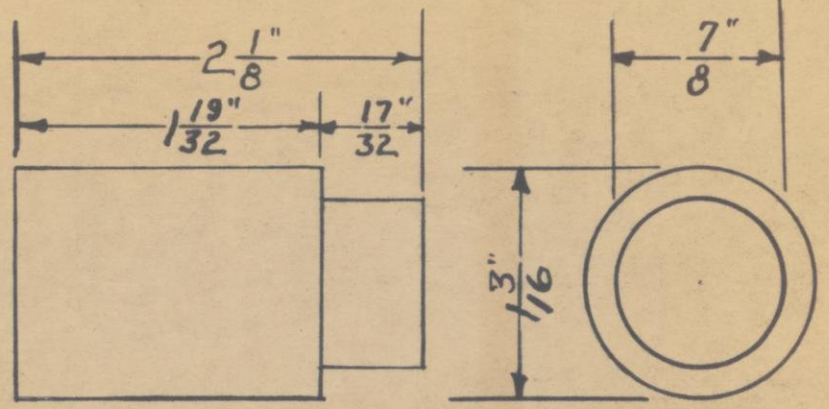

DATE-5-19-42

PLUG

SEE B. P. NO. 1818W-B

PATTERN NO. 1581

HAMILTON MFG. CO.

DO NOT REMOVE THIS LEAF FROM BOOK

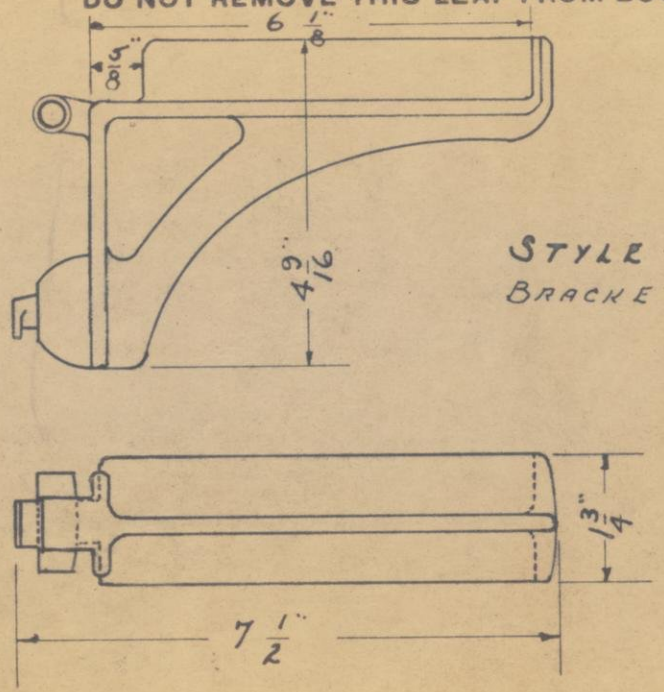

STYLE - "A"
BRACKET

DATE-

SEE B. P. NO.

PATTERN NO. 1582

HAMILTON MFG. CO.

DO NOT REMOVE THIS LEAF FROM BOOK

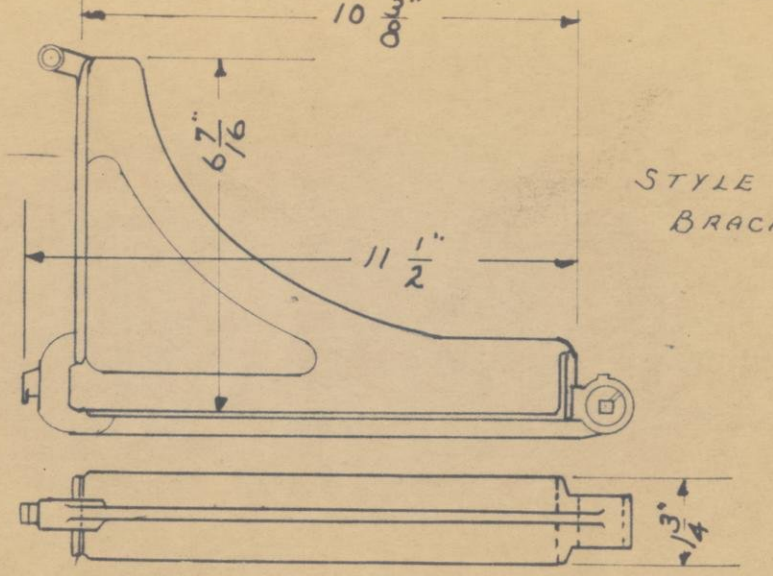

STYLE "B" BRACKET

DATE-

SEE B. P. NO.

PATTERN NO. 1583

HAMILTON MFG. CO.

DO NOT REMOVE THIS LEAF FROM BOOK

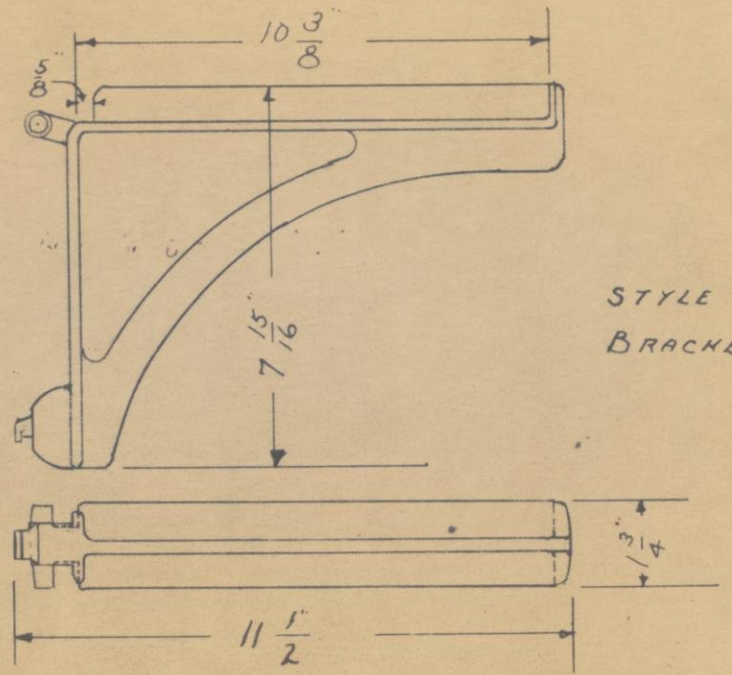

STYLE "C"
BRACKET

DATE-

SEE B. P. NO.

PATTERN NO. 1584

HAMILTON MFG. CO.

DO NOT REMOVE THIS LEAF FROM BOOK

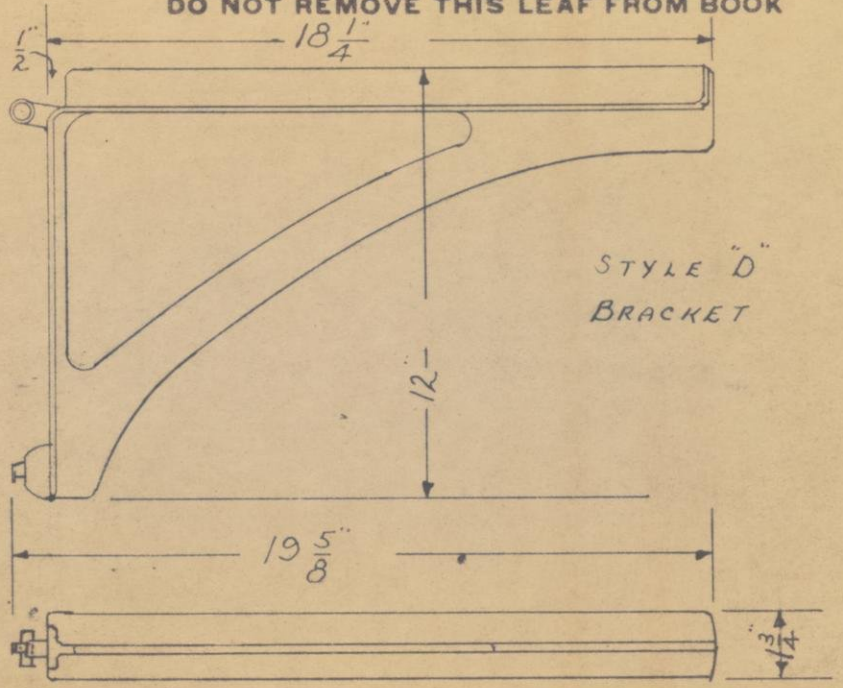

STYLE "D"
BRACKET

DATE-

SEE B. P. NO.

PATTERN NO. 1585

HAMILTON MFG. CO.

DO NOT REMOVE THIS LEAF FROM BOOK

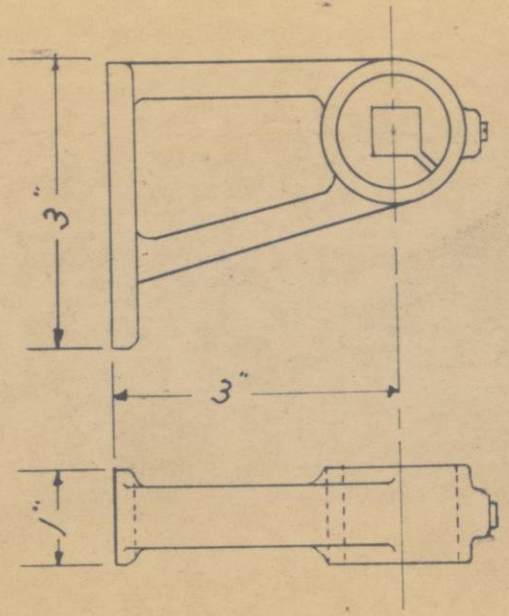

STYLE "E"
BRACKET

DATE-

SEE B. P. NO.

PATTERN NO. 1586

HAMILTON MFG. CO.

DO NOT REMOVE THIS LEAF FROM BOOK

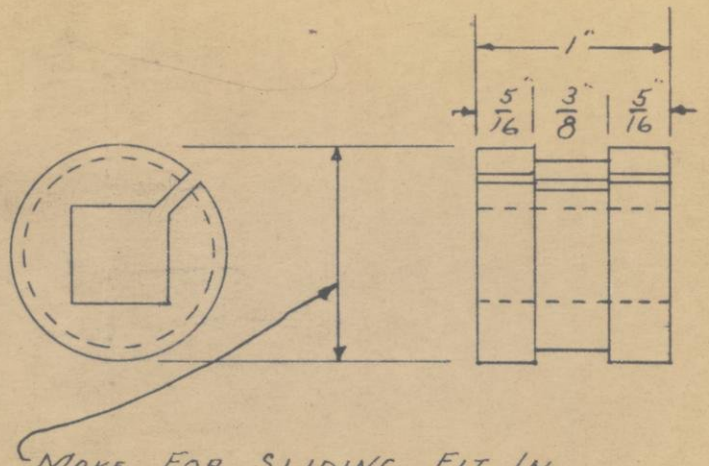

MAKE FOR SLIDING FIT IN
1 1/8" HOLE IN BRACKETS No. 1583 & 1586

DATE-

SEE B. P. NO.

PATTERN NO. 1587

HAMILTON MFG. CO.

DO NOT REMOVE THIS LEAF FROM BOOK

OK Red 8-13-53

DATE- 10-20-42 P.F.J.

MATERIAL - CAST IRON

WINGED HAND NUT

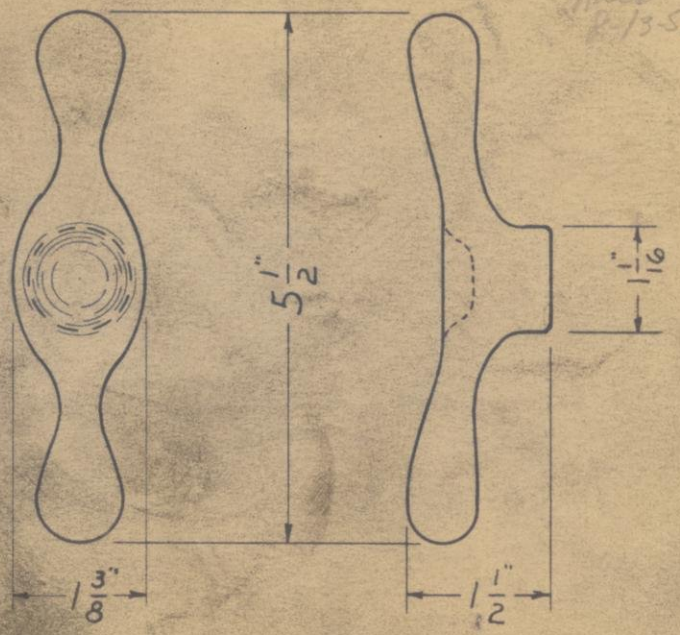

SEE B. P. NO. 581-C

PATTERN NO. 1588

HAMILTON MFG. CO.

DO NOT REMOVE THIS LEAF FROM BOOK

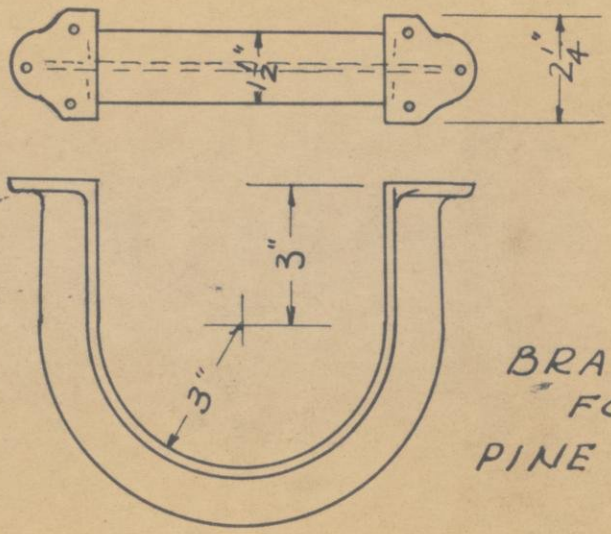

BRACKET
FOR
PINE TOP

DATE- 1-21-43

SEE B. P. NO. 36939E PATTERN NO. 1589

HAMILTON MFG. CO.

DO NOT REMOVE THIS LEAF FROM BOOK

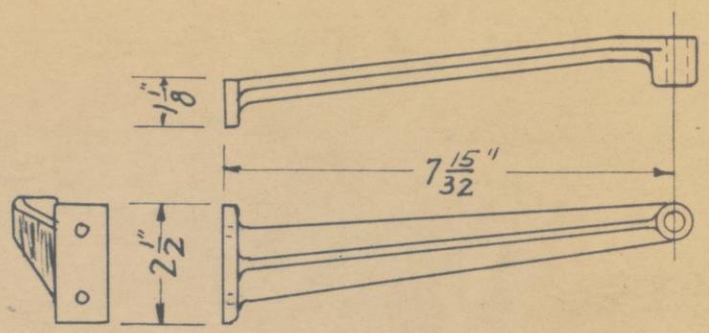

BRACKET

DATE- 1-21-43

SEE B. P. NO. 36939 E

PATTERN NO. 1590

HAMILTON MFG. CO.

DO NOT REMOVE THIS LEAF FROM BOOK

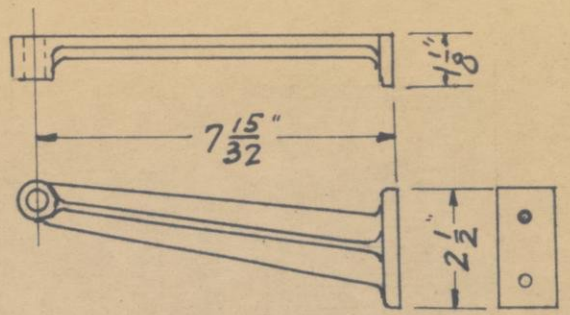

BRACKET

DATE- 1-21-43

SEE B. P. NO. 36939 E

PATTERN NO. 1591

HAMILTON MFG. CO.

DO NOT REMOVE THIS LEAF FROM BOOK

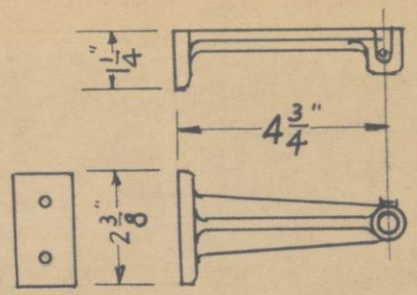

BRACKET

DATE- 1-21-43

SEE B. P. NO. 36939E

PATTERN NO. 1592

1.

HAMILTON MFG. CO.

DO NOT REMOVE THIS LEAF FROM BOOK

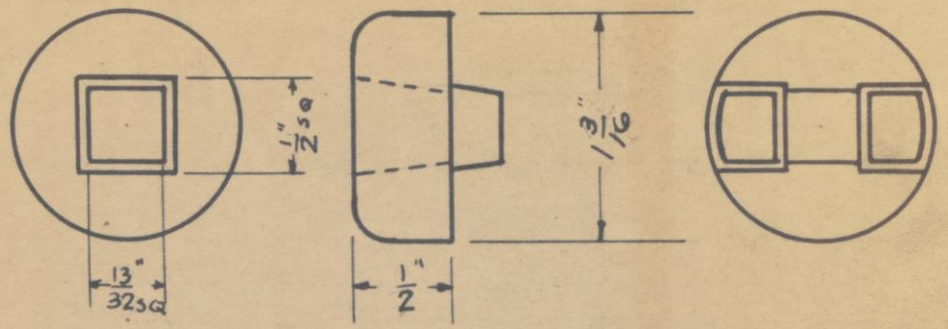

WASHER

DATE- 1-21-43

SEE B. P. NO. 36939E

PATTERN NO. 1593

HAMILTON MFG. CO.

DO NOT REMOVE THIS LEAF FROM BOOK

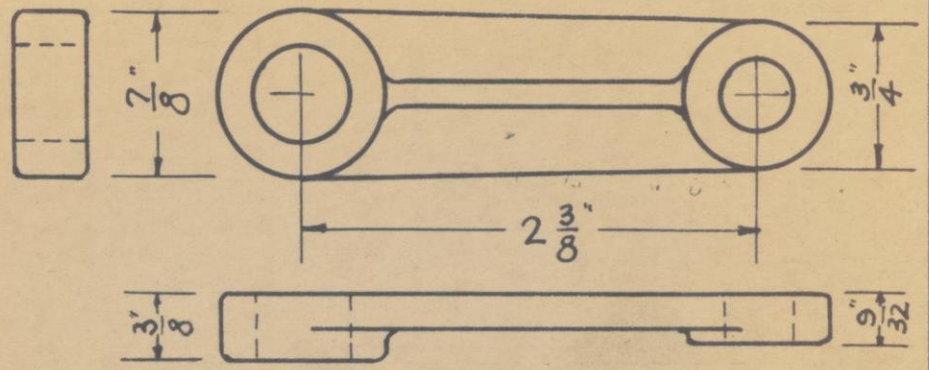

DATE- 1-21-43

CRANK

SEE B. P. NO. 36939E PATTERN NO. 1594

Used during Leaf Shortage

HAMILTON MFG. CO.

DO NOT REMOVE THIS LEAF FROM BOOK

When we can purchase again Use No. 563 Full Ends from Bassick Co.

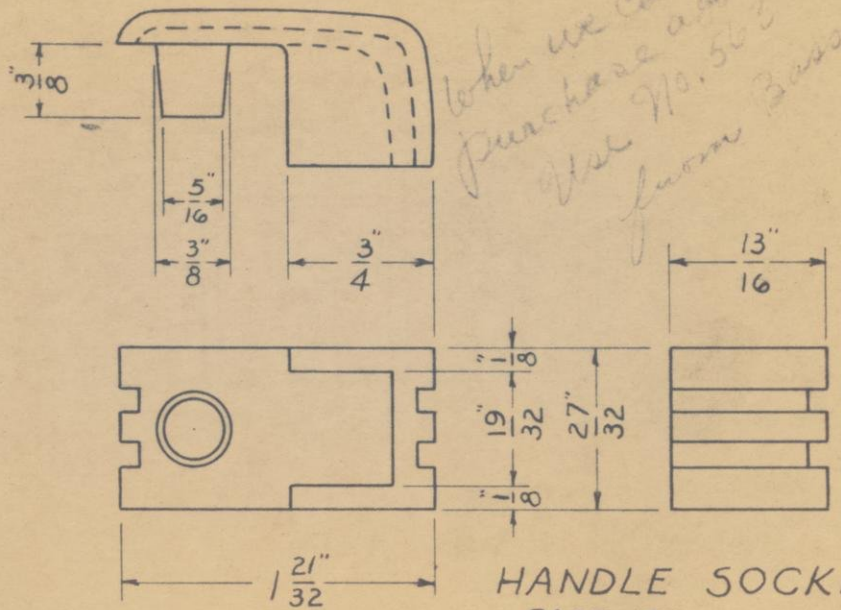

DATE- 3-23-43

HANDLE SOCKET

CAST IRON

SEE B. P. NO. NO DRAWING MADE PATTERN NO. 1595

HAMILTON MFG. CO.

DO NOT REMOVE THIS LEAF FROM BOOK

THIS IS SAME AS No 312 LEG SOCKET
ORNAMENTAL FURN. HDWE CO. ROCKFORD ILL
WHICH WAS USED AS PATTERN

DATE- 3-15-43

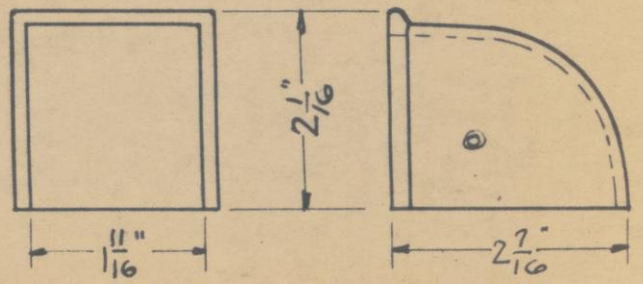

LEG SOCKET

CAST IRON

SEE B. P. NO. NO WORKING DRWG MADE

PATTERN NO. 1596

HAMILTON MFG. CO.

DO NOT REMOVE THIS LEAF FROM BOOK

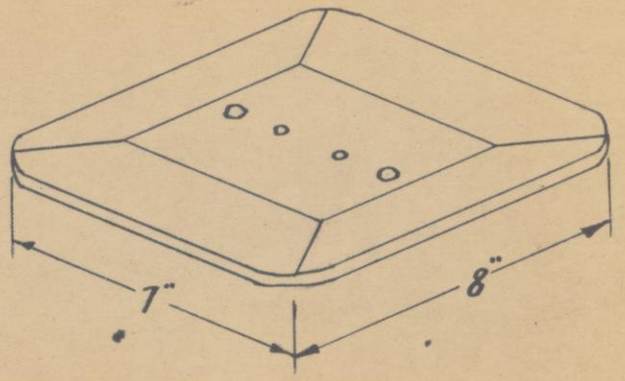

DATE- 4-16-43

SEE B. P. NO. R-6030E

PATTERN NO. 1597

HAMILTON MFG. CO.

DO NOT REMOVE THIS LEAF FROM BOOK

DATE- 4-16-43

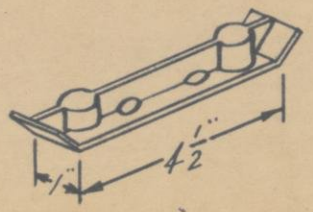

SEE B. P. NO. R-6030F PATTERN NO. 1598

HAMILTON MFG. CO.

DO NOT REMOVE THIS LEAF FROM BOOK

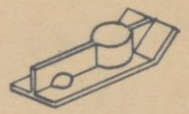

DATE- 4-16-43

SEE B. P. NO. R-6030 G PATTERN NO. 1599

HAMILTON MFG. CO.

DO NOT REMOVE THIS LEAF FROM BOOK

DATE- 6-25-43

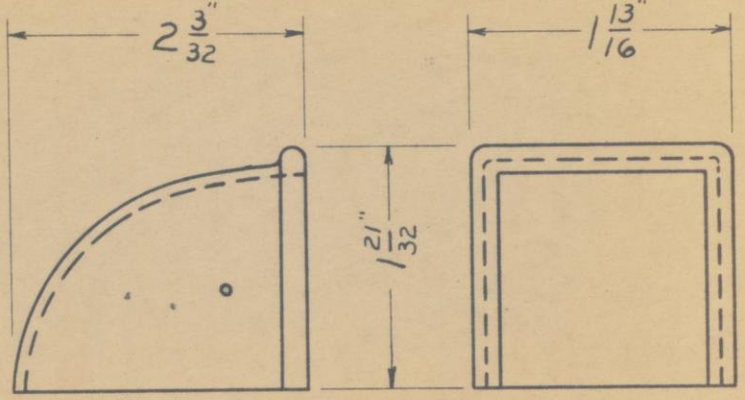

LEG SOCKET

CAST IRON

SEE B. P. NO. 9610-XS PATTERN NO. 1600

HAMILTON MFG. CO.

DO NOT REMOVE THIS LEAF FROM BOOK

DATE- 7-2-43

SEE BLUE PRINT FOR UNDERCUTS

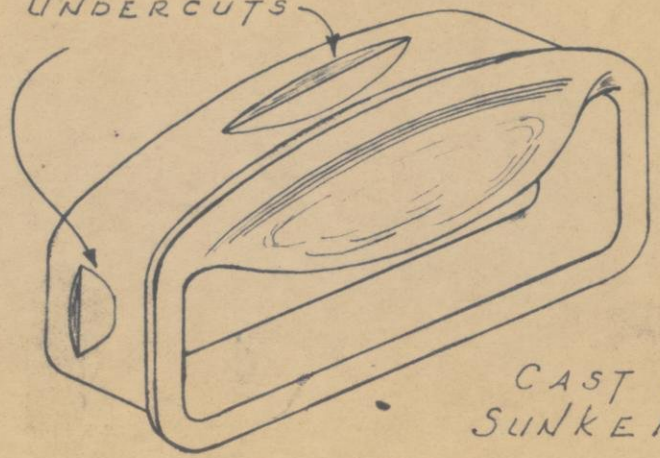

CAST IRON SUNKEN PULL

SEE B. P. NO. 0025803-P PATTERN NO. 1601

HAMILTON MFG. CO.

DO NOT REMOVE THIS LEAF FROM BOOK

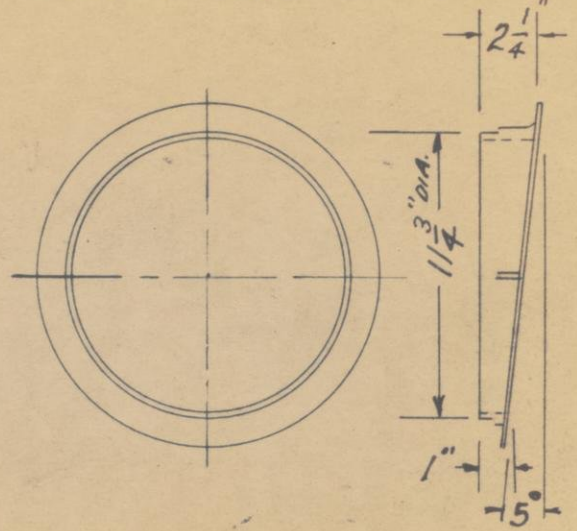

COLLAR FOR VENTILATOR

DATE- 9-7-43

SEE B. P. NO. L-0025866-A PATTERN NO. 1606

HAMILTON MFG. CO.

DO NOT REMOVE THIS LEAF FROM BOOK

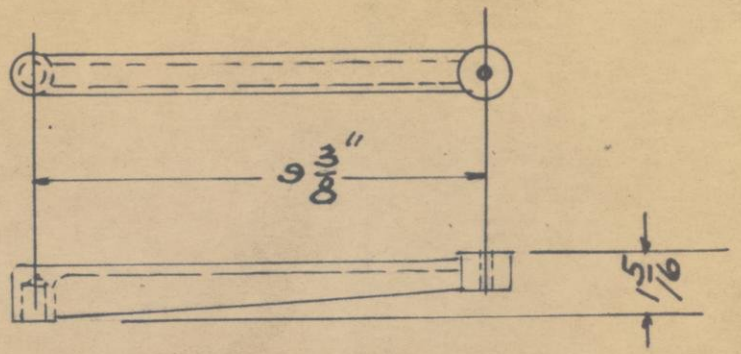

DATE- 9-24-43

CAST IRON ARM FOR
NO. 9543 ARM REST

THIS IS TO REPLACE PAT. NO. 1419
FOR THE DURATION OF THE WAR

SEE B. P. NO. 9543-B PATTERN NO. 1607

HAMILTON MFG. CO.

DO NOT REMOVE THIS LEAF FROM BOOK

DATE- 10-20-43

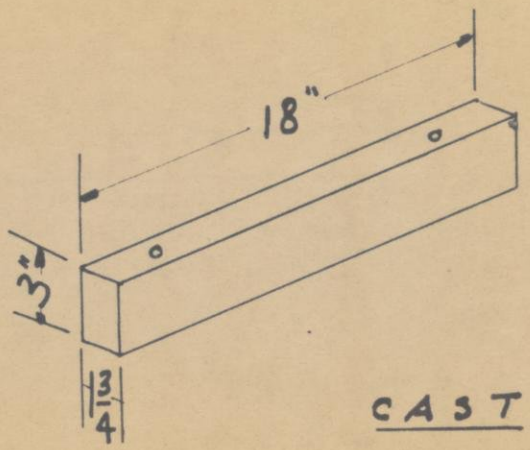

CAST IRON

BALANCE WEIGHT FOR NO. 149 CAST

SEE B. P. NO. 37626 PATTERN NO. 1608

HAMILTON MFG. CO.

DO NOT REMOVE THIS LEAF FROM BOOK

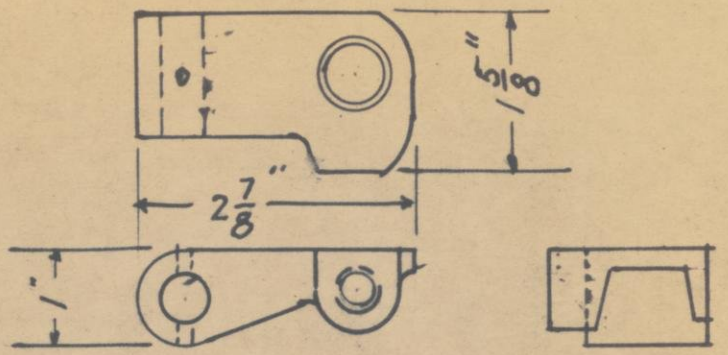

DATE-

TRIP ROD CLAMP

FOR 9820 AP & 9905 AP EX. TABLES

CAST STEEL

1 RIGHT & 1 LEFT REQ'D.

SEE B. P. NO. 9820 AP-J PATTERN NO. 1609 R&L

HAMILTON MFG. CO.

DO NOT REMOVE THIS LEAF FROM BOOK

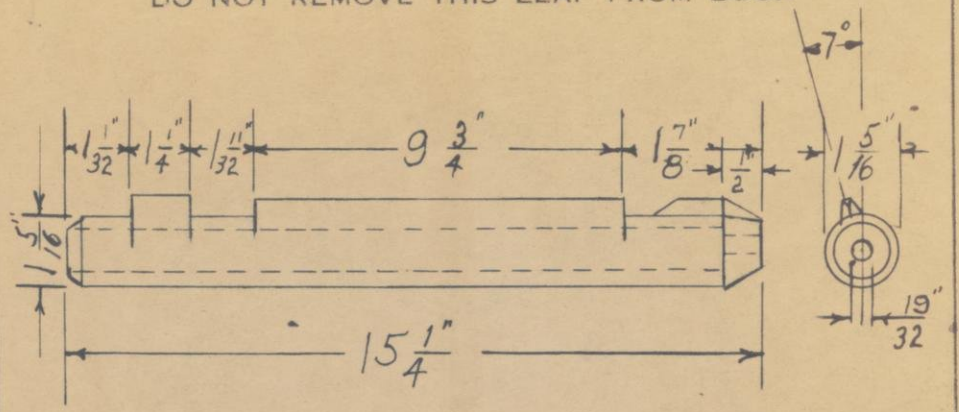

BURNER - FOR DOUBLE ROW OF PORTS

DATE

SEE B. P. NO. 8-69

PATTERN NO. 1610

HAMILTON MFG. CO.

DO NOT REMOVE THIS LEAF FROM BOOK

DATE- 1-6-44 R.O.G.

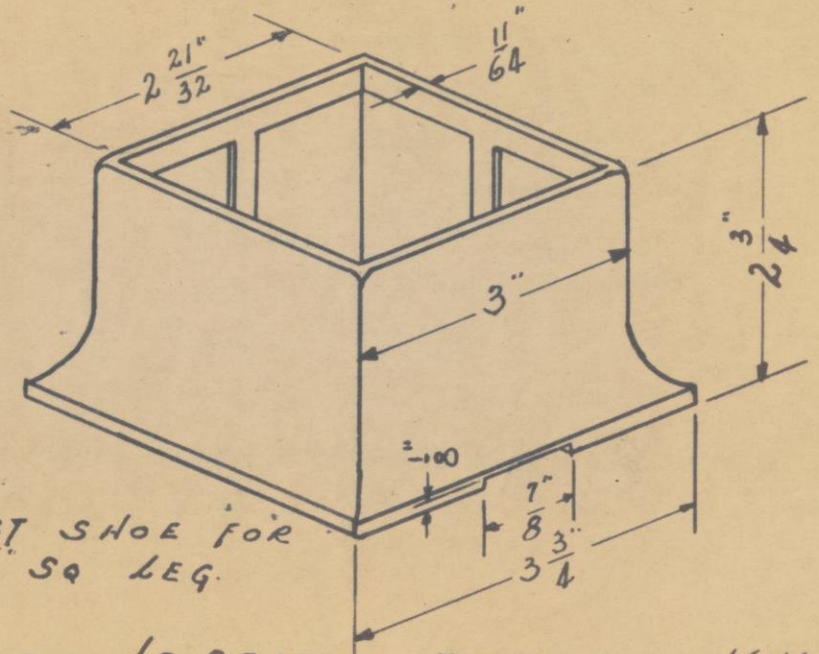

CAST SHOE FOR 2 5/8" SQ LEG.

SEE B. P. NO. LS-2002-A [redacted] NO. 1611

PATTERN

HAMILTON MFG. CO.

DO NOT REMOVE THIS LEAF FROM BOOK

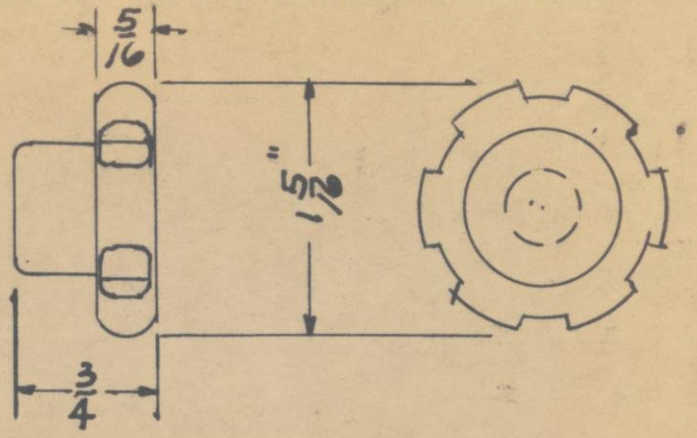

DATE-

CLAMP SCREW HAND WHEEL FOR RAISING DEVICE ON #9905 AP TABLE

SEE B. P. NO. 9820 AP-J PATTERN NO. 1612

HAMILTON MFG. CO.

DO NOT REMOVE THIS LEAF FROM BOOK

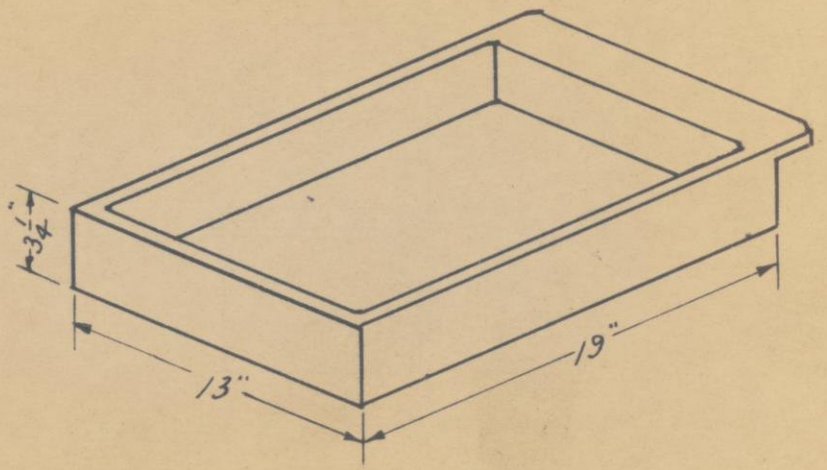

DATE-

DROSS FORM

SEE B. P. NO. 732-FE PATTERN NO. 1613

HAMILTON MFG. CO.

DO NOT REMOVE THIS LEAF FROM BOOK

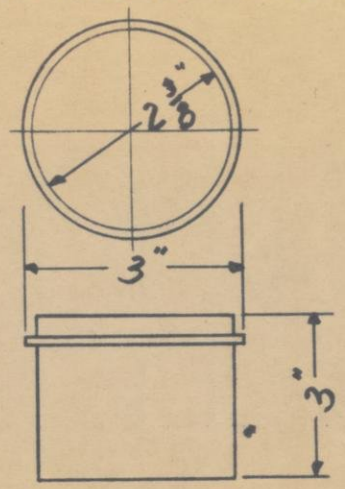

DATE- 5-8-44

SPECIAL FLUSH PLATE FOR
TITRATION TABLE

SEE B. P. NO. LF-38089-B PATTERN NO. 1614

HAMILTON MFG. CO.

DO NOT REMOVE THIS LEAF FROM BOOK

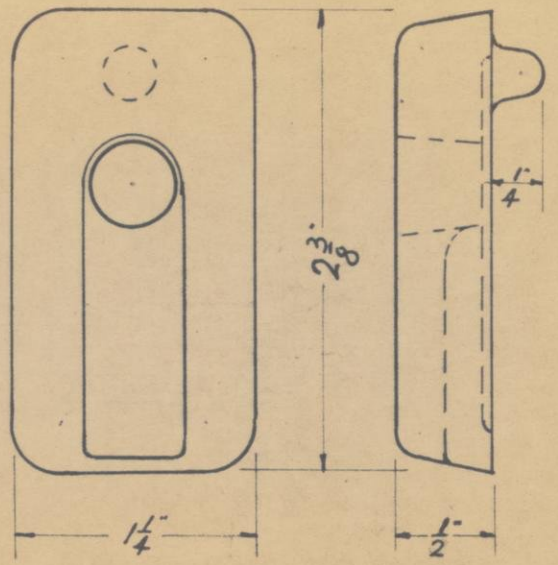

DATE- 8-8-44-A.O.

CLAMP.

SEE B. P. NO. 582-C

PATTERN NO. 1615

3

HAMILTON MFG. CO.

DO NOT REMOVE THIS LEAF FROM BOOK

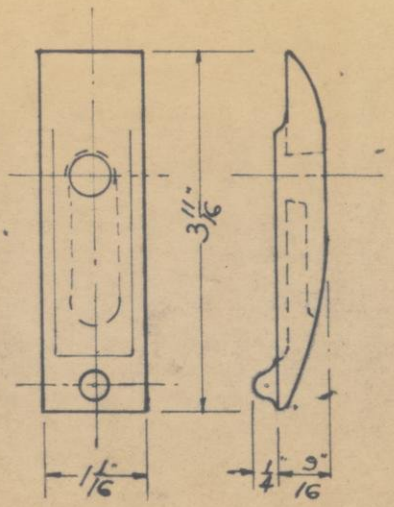

DATE- 8-8-44 A.O.

CAST IRON CLAMP FOR CIRCLE IRON

SEE B. P. NO. 583-C.

PATTERN NO. 1616

HAMILTON MFG. CO.

DO NOT REMOVE THIS LEAF FROM BOOK

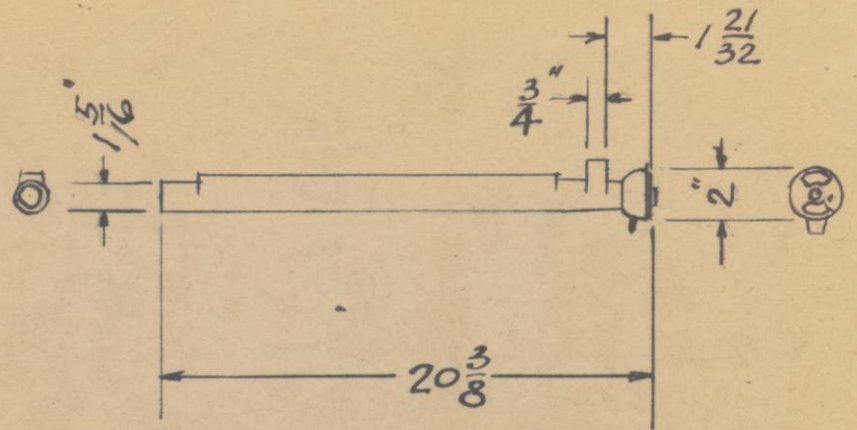

GAS BURNER
CAST IRON
1 REQ'D.

DATE 5-22-45

SEE B. P. NO. HC7-3P PATTERN NO. 1619

HAMILTON MFG. CO.

DO NOT REMOVE THIS LEAF FROM BOOK

DATE- 9-25-45

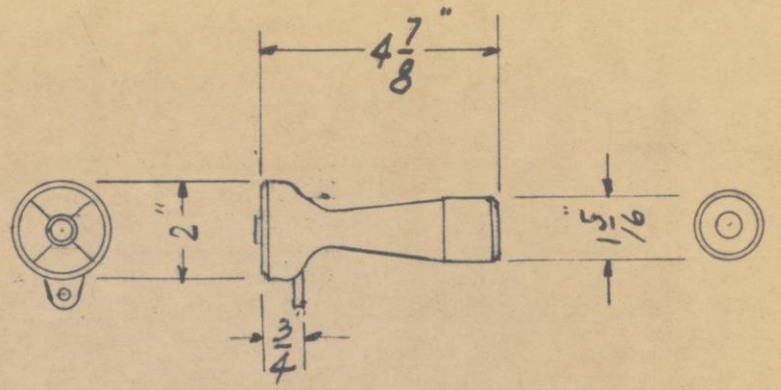

BURNER REAR END

CAST IRON

FOR #700 DRYER

SEE B. P. NO. HC7-3AP PATTERN NO. 1620

HAMILTON MFG. CO.

DO NOT REMOVE THIS LEAF FROM BOOK

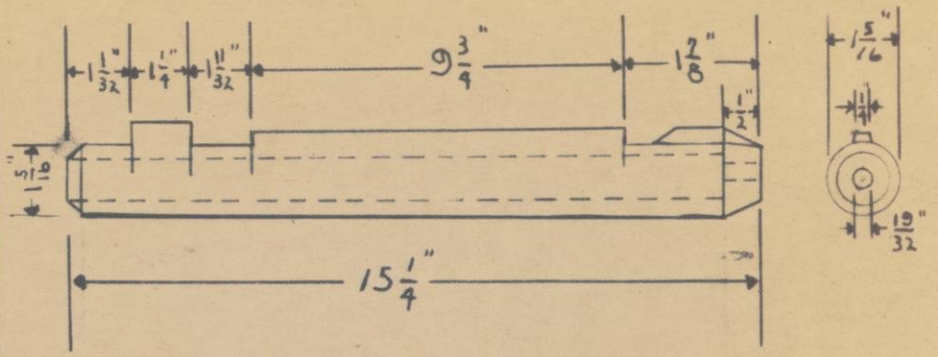

BURNER FRONT END
CAST IRON
FOR # 700 DRYER

DATE-

SEE B. P. NO. HC 7-3AP PATTERN NO. 1621.

HAMILTON MFG. CO.

DO NOT REMOVE THIS LEAF FROM BOOK

DATE- 2-21-47

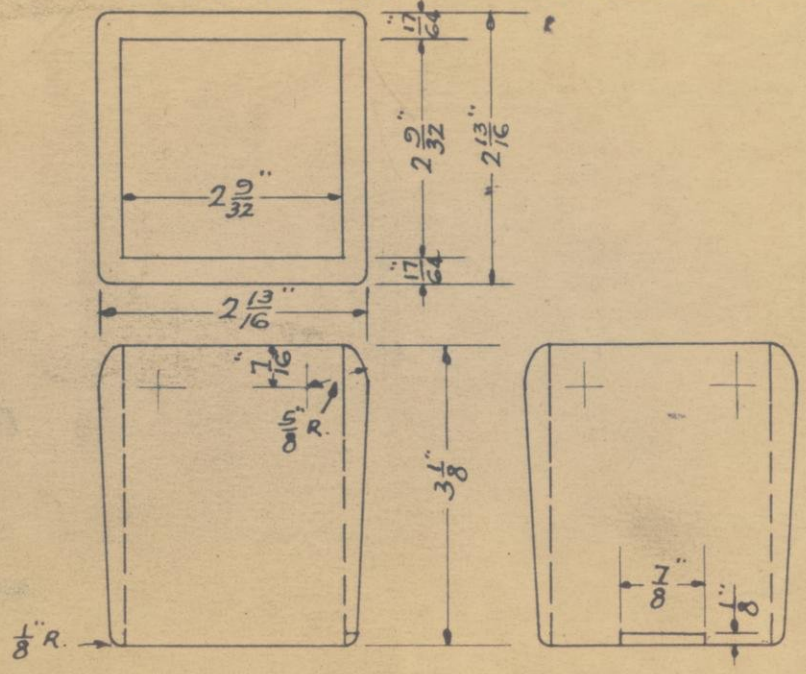

SEE B. P. NO. LS-2002-A PATTERN NO. 1622

HAMILTON MFG. CO.

DO NOT REMOVE THIS LEAF FROM BOOK

DATE- 2-8-46

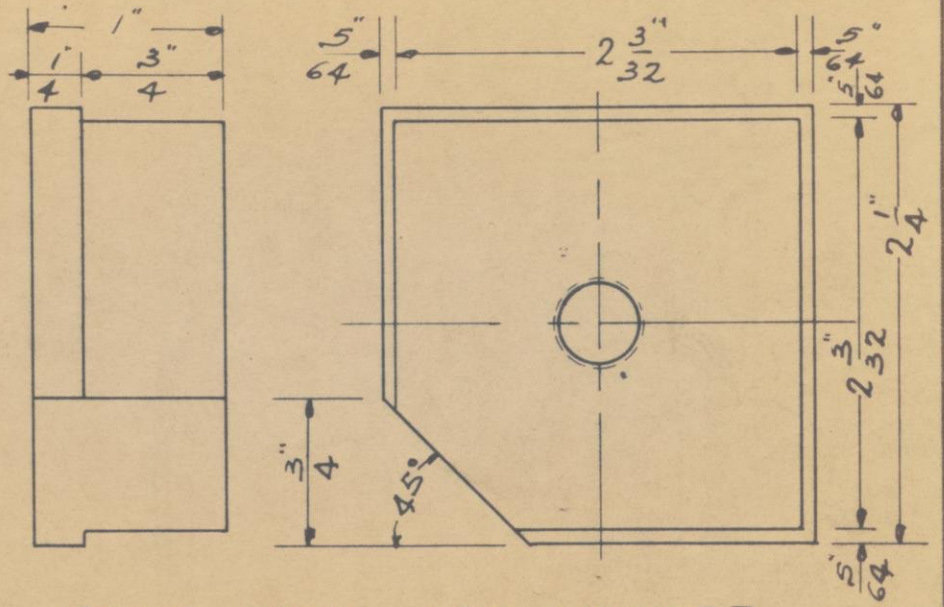

CAST IRON LEG INSERT

SEE B. P. NO. L-0026857-A PATTERN NO. 1623

HAMILTON MFG. CO.

DO NOT REMOVE THIS LEAF FROM BOOK

DATE- 3-30-46

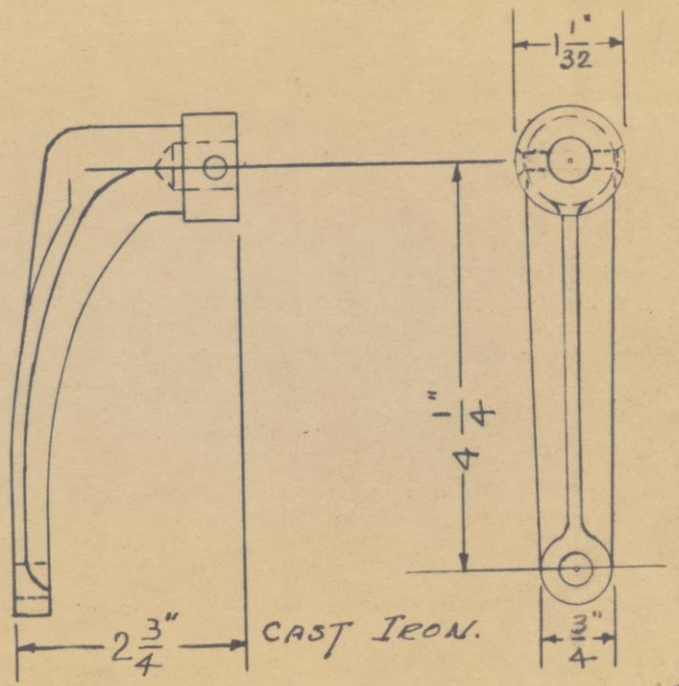

SEE B. P. NO. 9905 A P-K

PATTERN NO. 1624

HAMILTON MFG. CO.

DO NOT REMOVE THIS LEAF FROM BOOK

DATE- 2-22-47

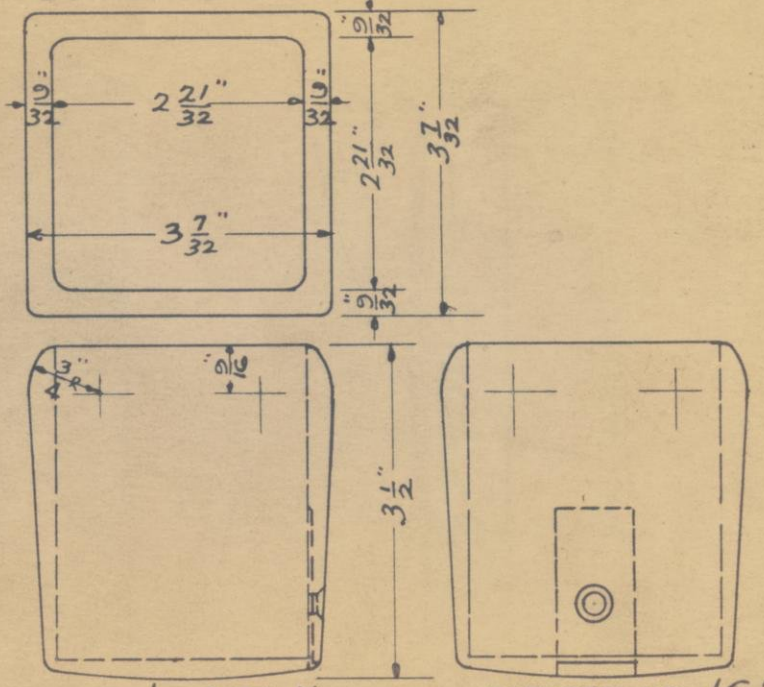

SEE B. P. NO. L-061-X

PATTERN NO. 1625

HAMILTON MFG. CO.

DO NOT REMOVE THIS LEAF FROM BOOK

DATE-

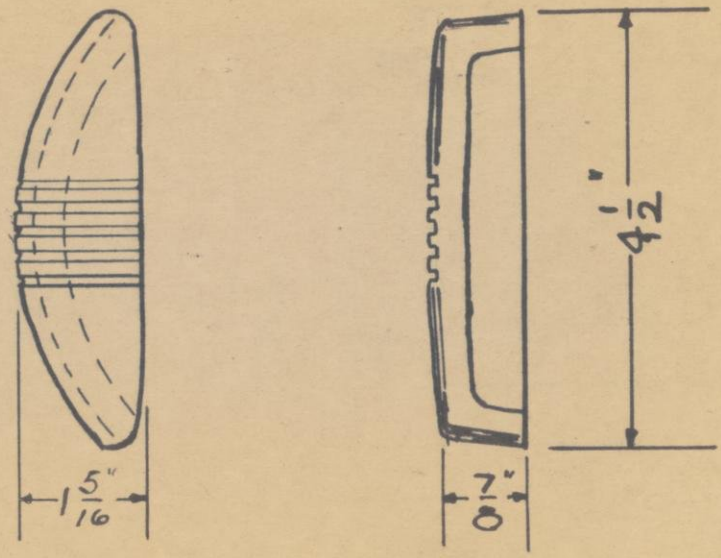

SEE B. P. NO. 2-205

PATTERN NO 1628

HAMILTON MFG. CO.

DO NOT REMOVE THIS LEAF FROM BOOK

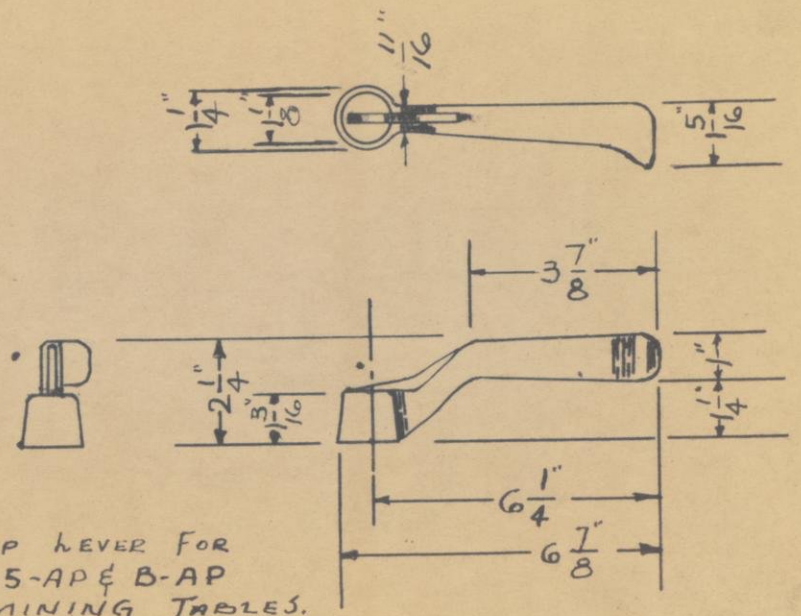

DATE-

CLAMP LEVER FOR
#9905-AP & B-AP
EXAMINING TABLES.

SEE B. P. NO. 9905 AP-L

PATTERN NO. 1629

HAMILTON MFG. CO.

DO NOT REMOVE THIS LEAF FROM BOOK

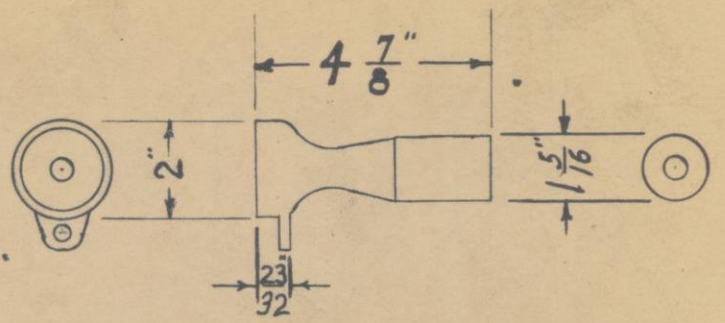

FRONT END OF
GAS BURNER

DATE-

SEE B. P. NO. 8-79

PATTERN NO. 1630

HAMILTON MFG. CO.

DO NOT REMOVE THIS LEAF FROM BOOK

DATE 1-28-47

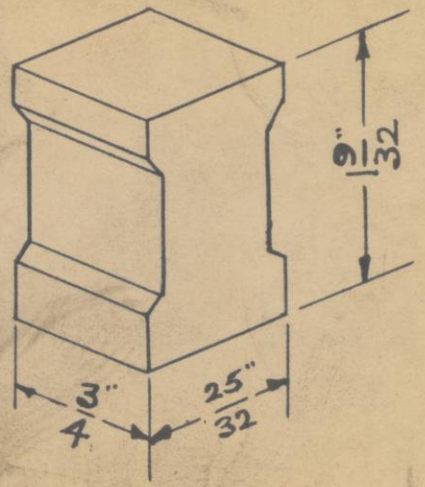

8-14-53

SEE B. P. NO. No. DRAWING PATTERN NO. 1631

HAMILTON MFG. CO.

DO NOT REMOVE THIS LEAF FROM BOOK

DATE- 2-20-47 W.S.

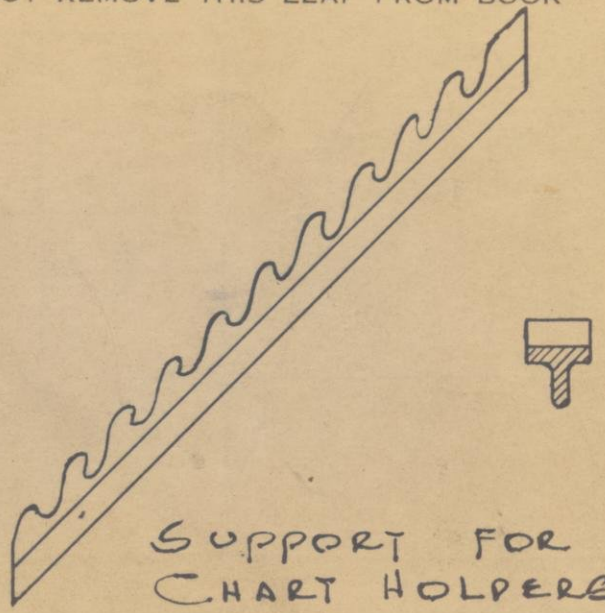

SUPPORT FOR
CHART HOLDERS

SEE B. P. NO. PH 5-8½ PATTERN NO. 1632

HAMILTON MFG. CO.

DO NOT REMOVE THIS LEAF FROM BOOK

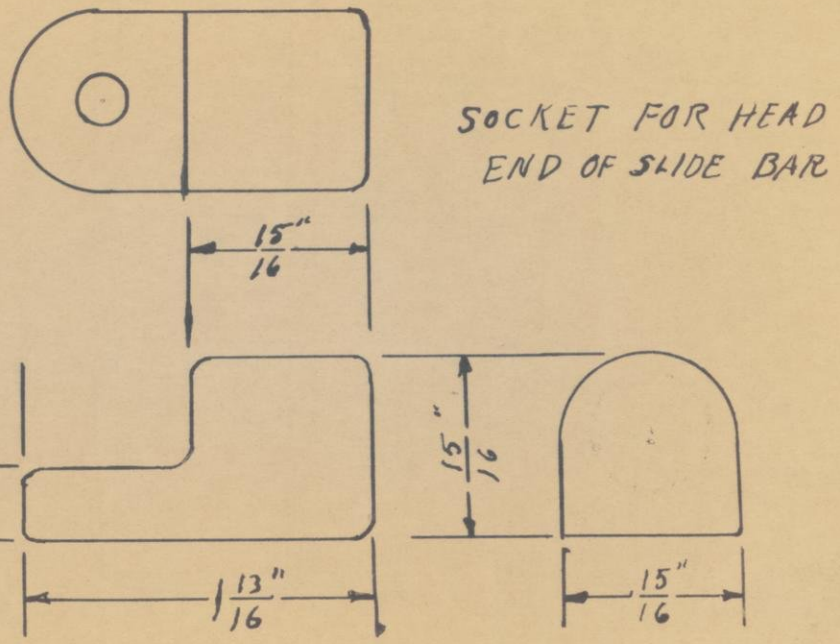

SOCKET FOR HEAD
END OF SLIDE BAR

DATE- 2-22-RFG

SEE B. P. NO. 9905AP-N

PATTERN NO. 1634

HAMILTON MFG. CO.

DO NOT REMOVE THIS LEAF FROM BOOK

DATE- 2-22-47

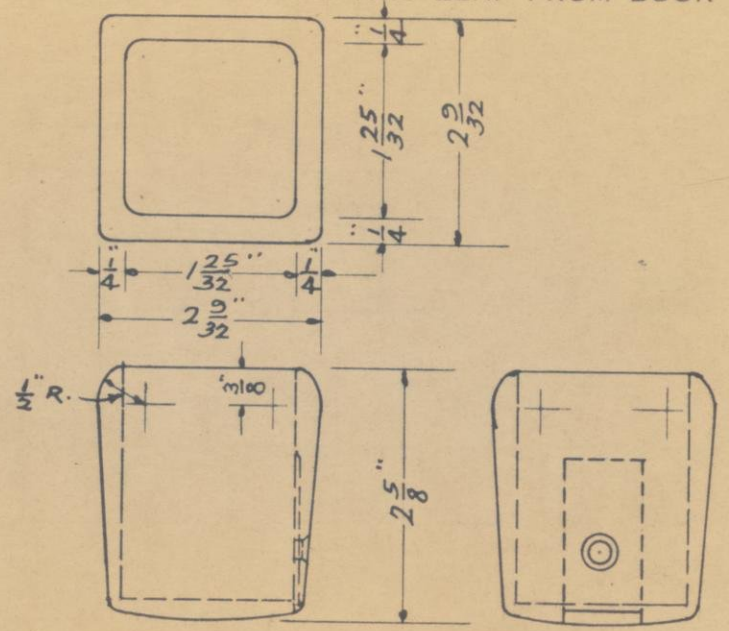

SEE B. P. NO. L-061-XA

PATTERN NO. 1636

HAMILTON MFG. CO.

DO NOT REMOVE THIS LEAF FROM BOOK

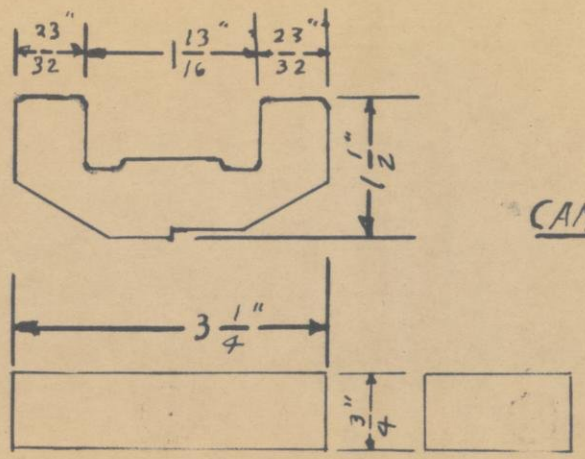

CAM BRACKET

DATE-2-21-47 RFG

SEE B. P. NO. 9905AP-U

PATTERN NO. 1637

HAMILTON MFG. CO.

DO NOT REMOVE THIS LEAF FROM BOOK

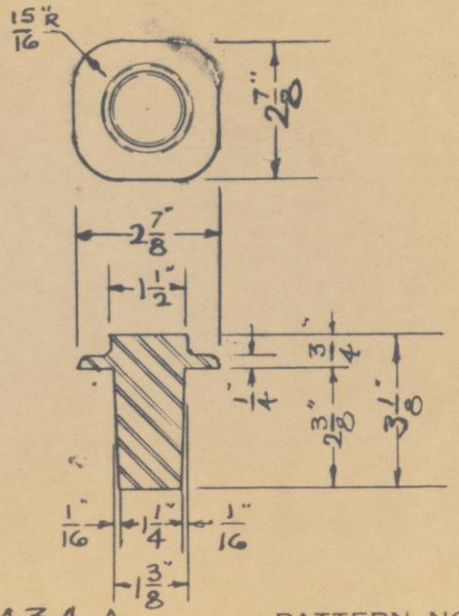

DATE- 3-10-47

SEE B. P. NO. 40434-A

PATTERN NO. 1638

HAMILTON MFG. CO.

DO NOT REMOVE THIS LEAF FROM BOOK

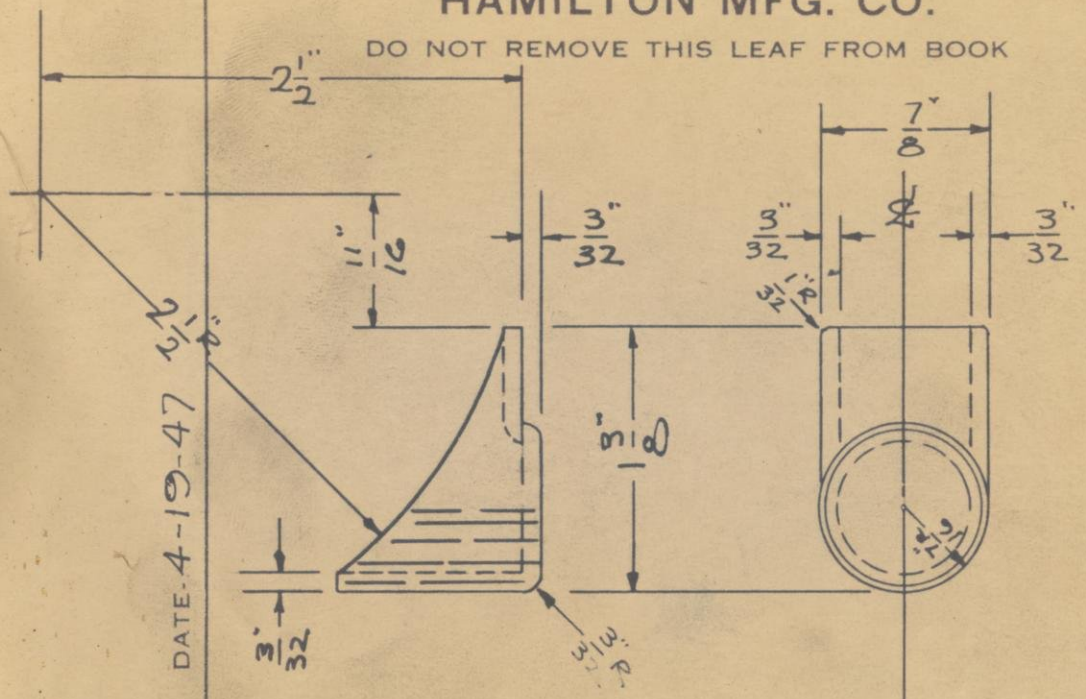

DATE 4-19-47

CASTING FOR PAPER CUTTER.

SEE B. P. NO. 9862 -XP

PATTERN NO. 1640

HAMILTON MFG. CO.

DO NOT REMOVE THIS LEAF FROM BOOK

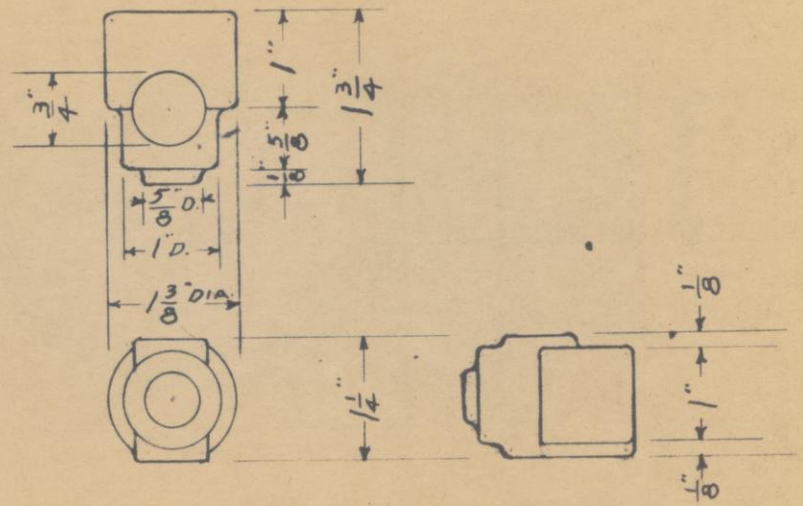

DATE

SUPPORT FOR ARM REST HINGE

MAT. CAST IRON

SEE B. P. NO. 9905 AP-N PATTERN NO 1646

JW. 7-23-47

HAMILTON MFG. CO.

DO NOT REMOVE THIS LEAF FROM BOOK

MARINE PRODUCTS DIV.

DATE 9-29-47

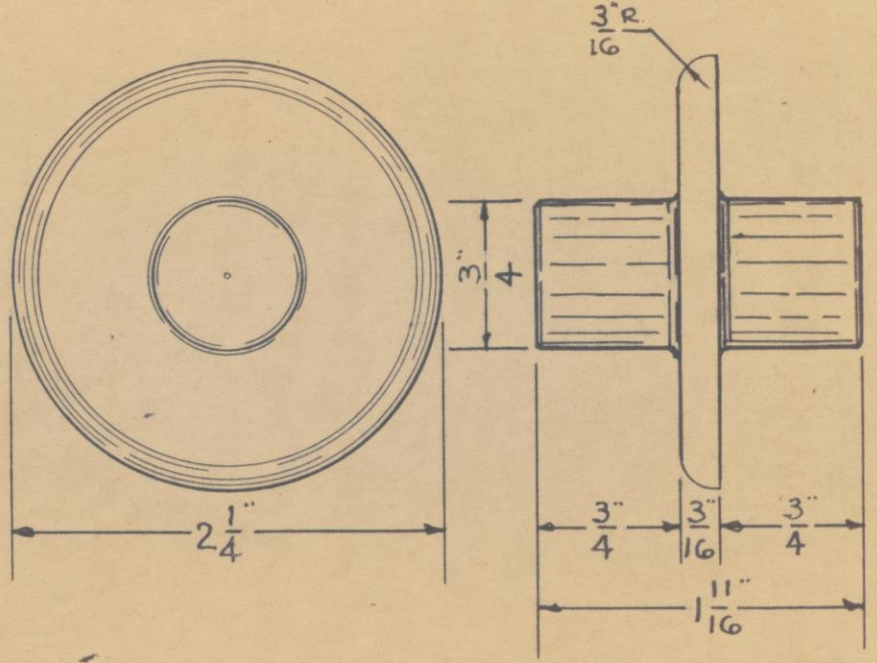

SEE B. P. NO.

PATTERN NO. 1647

HAMILTON MFG. CO.

DO NOT REMOVE THIS LEAF FROM BOOK

MARINE PROD. DIVISION.

DATE 1-13-48

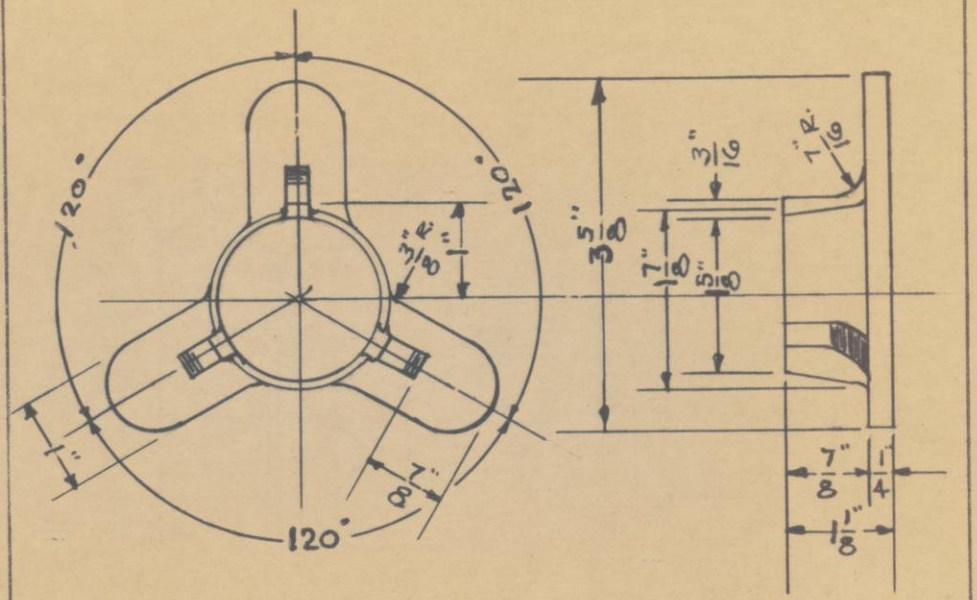

SEE B. P. NO. EXI-1

PATTERN NO. 1648

HAMILTON MFG. CO.

DO NOT REMOVE THIS LEAF FROM BOOK

MARINE PRODUCTS DIVISION.

DATE 9-30-47

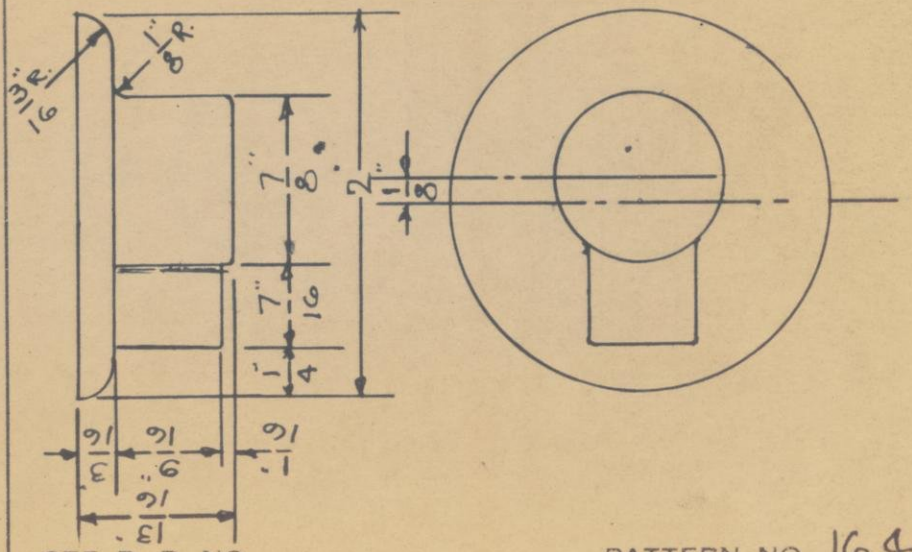

SEE B. P. NO.

PATTERN NO. 1649

HAMILTON MFG. CO.

DO NOT REMOVE THIS LEAF FROM BOOK

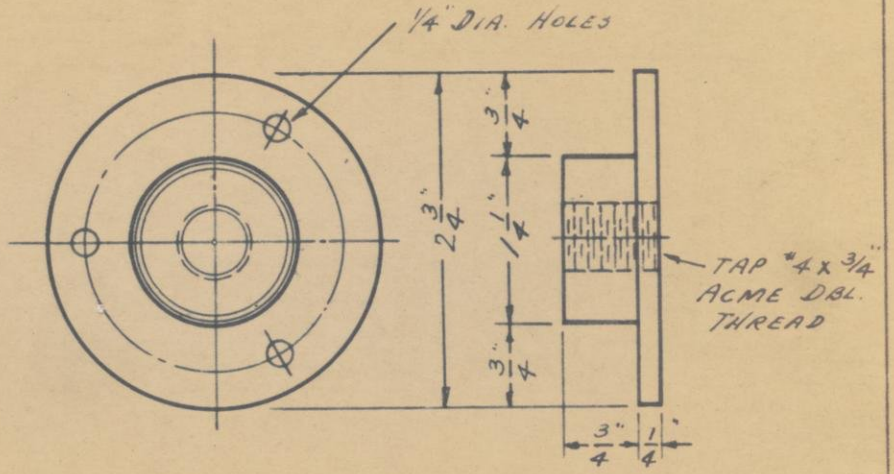

CAST IRON COLLAR

DATE- 6-7-43

SEE B. P. NO. 41695-B

PATTERN NO. 1650

HAMILTON MFG. CO.

DO NOT REMOVE THIS LEAF FROM BOOK

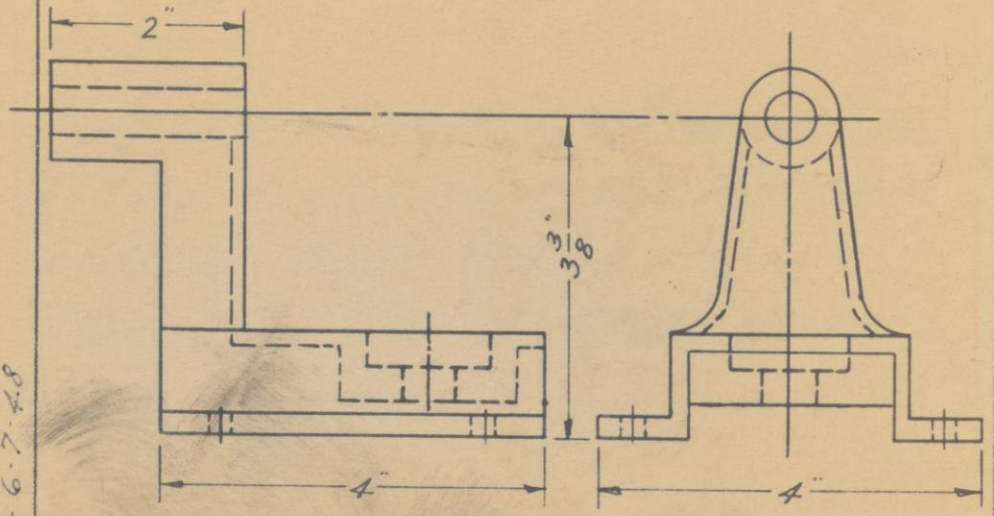

DATE- 6-7-48

CAST IRON BRACKET

SEE B. P. NO. 41695-B PATTERN NO. 1651

HAMILTON MFG. CO.

DO NOT REMOVE THIS LEAF FROM BOOK

NOTE –
PATTERN #1652 TO #1660 INCL.
WERE USED FOR ORTHOPEDIC
TABLE PER BLUE PRINT
#0027369 & ARE NOW
OBSOLETE

DATE.

SEE B. P. NO.

PATTERN NO. 1652 TO 1660

HAMILTON MFG. CO.

DO NOT REMOVE THIS LEAF FROM BOOK

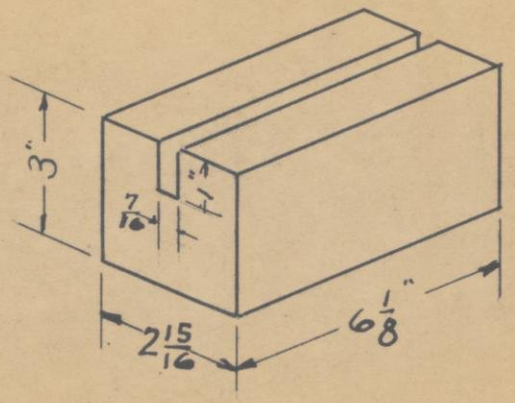

DATE- 5-5-48

WEIGHT FOR ORTHPEDIC TABLE

SEE B. P. NO. NO B.P.

PATTERN NO. 1661

HAMILTON MFG. CO.

DO NOT REMOVE THIS LEAF FROM BOOK

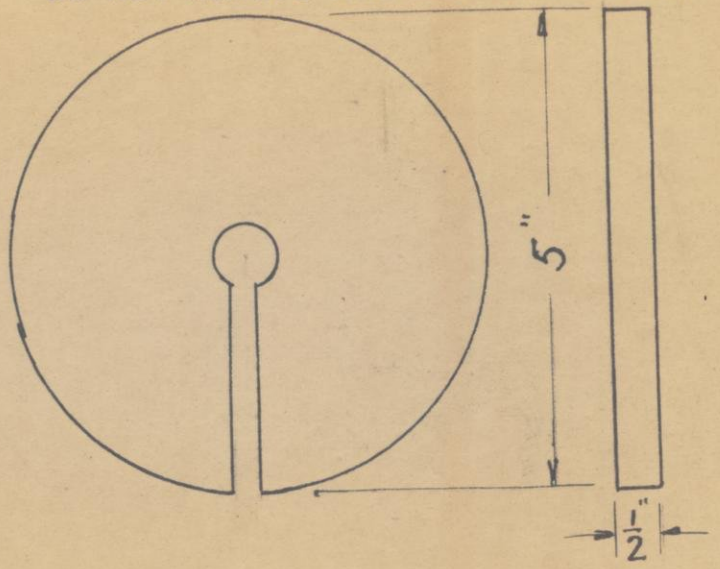

DATE- 5-5-48

WEIGHT FOR ORTHPEDIC TABLE

SEE B. P. NO. NO B.P.

PATTERN NO. 1662

HAMILTON MFG. CO.

DO NOT REMOVE THIS LEAF FROM BOOK

DATE- 5-5-48

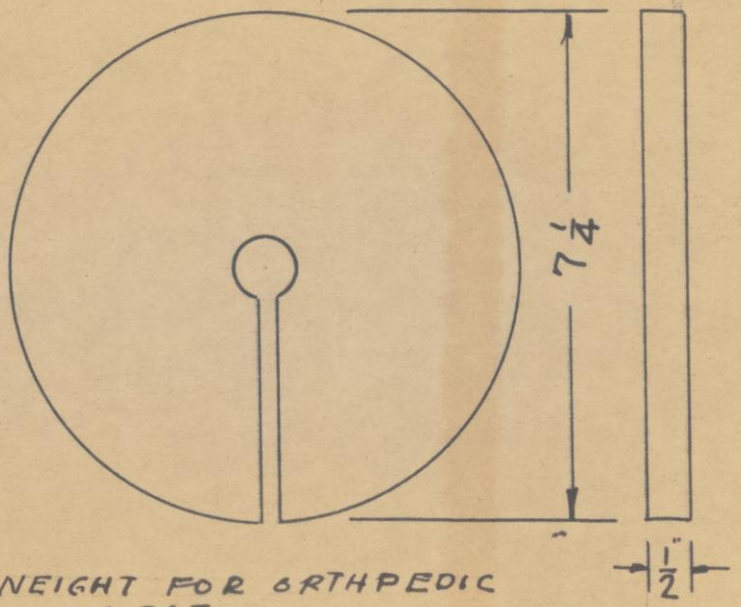

WEIGHT FOR ORTHPEDIC TABLE

SEE B. P. NO. NO. B.P.

PATTERN NO. 1663

HAMILTON MFG. CO.

DO NOT REMOVE THIS LEAF FROM BOOK

DATE- 7-22-48

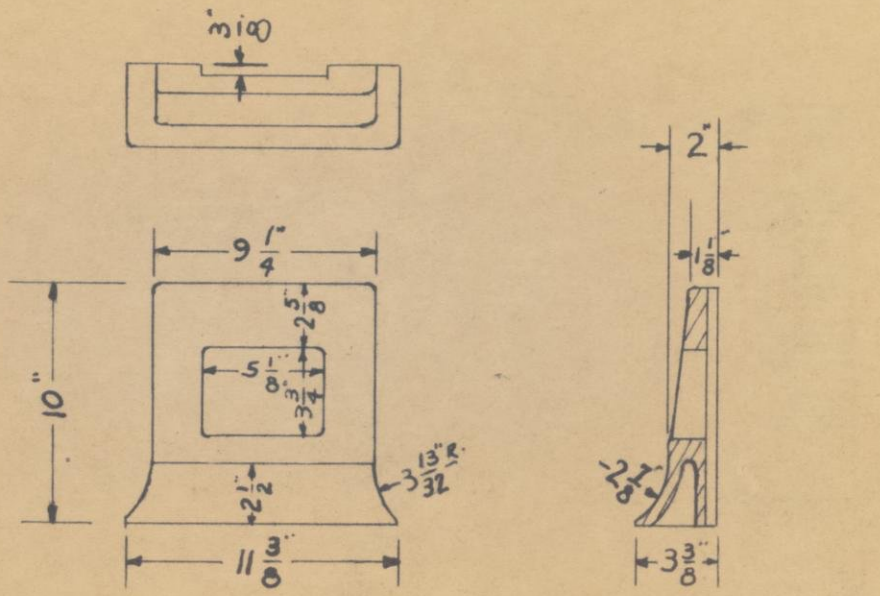

SHEARING TOOL HOUSING

SEE B. P. NO. 0027382 PATTERN NO. 1664

HAMILTON MFG. CO.

DO NOT REMOVE THIS LEAF FROM BOOK

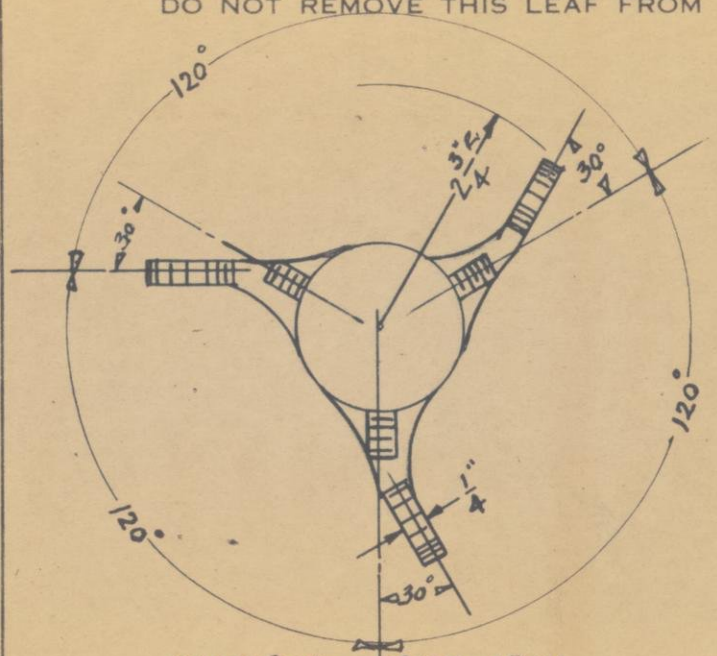

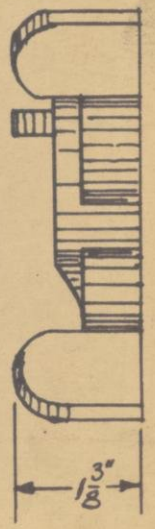

DATE-11-20-48

MATERIAL- CAST IRON

SEE B. P. NO. EX1-45

PATTERN NO. 1665

÷ ICE-LITE DIVISION ÷

HAMILTON MFG. CO.

DO NOT REMOVE THIS LEAF FROM BOOK

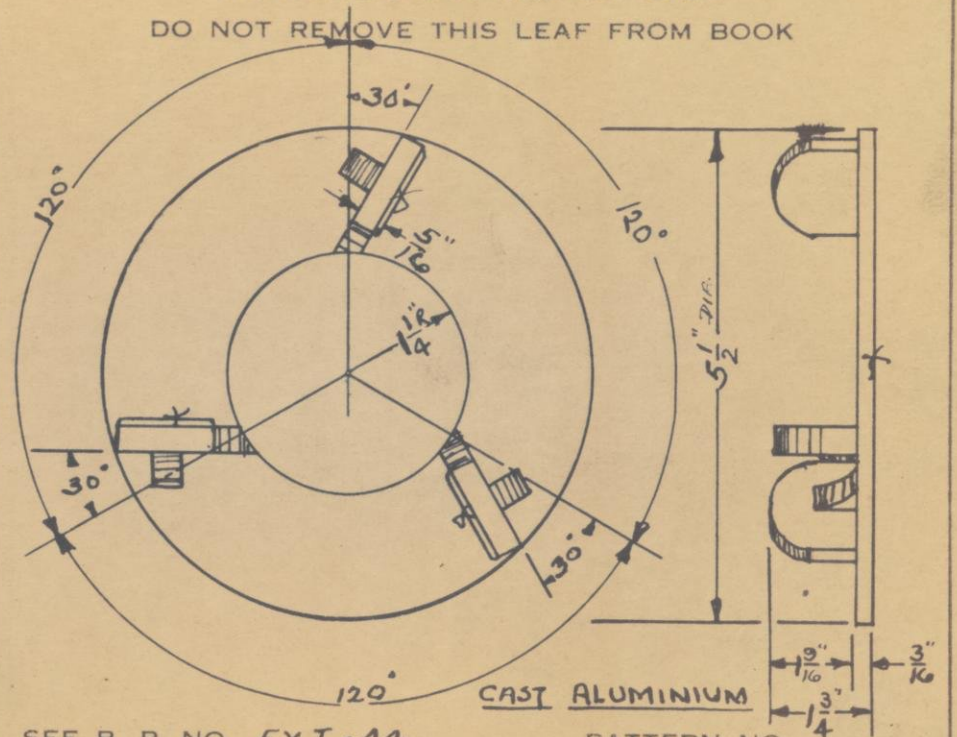

DATE- 11-1945

CAST ALUMINIUM

SEE B. P. NO. EXI-44

PATTERN NO. 1666

÷ ICE-LITE DIVISION ÷

HAMILTON MFG. CO.

DO NOT REMOVE THIS LEAF FROM BOOK

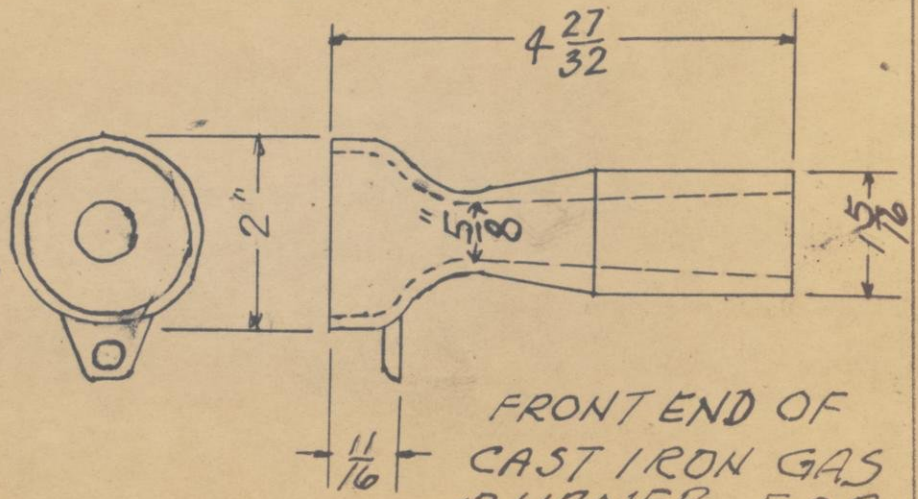

FRONT END OF CAST IRON GAS BURNER FOR #1000G DRYER

DATE

SEE B. P. NO. 8-83

PATTERN NO. 1667

HAMILTON MFG. CO.

DO NOT REMOVE THIS LEAF FROM BOOK

DATE 1-12-49

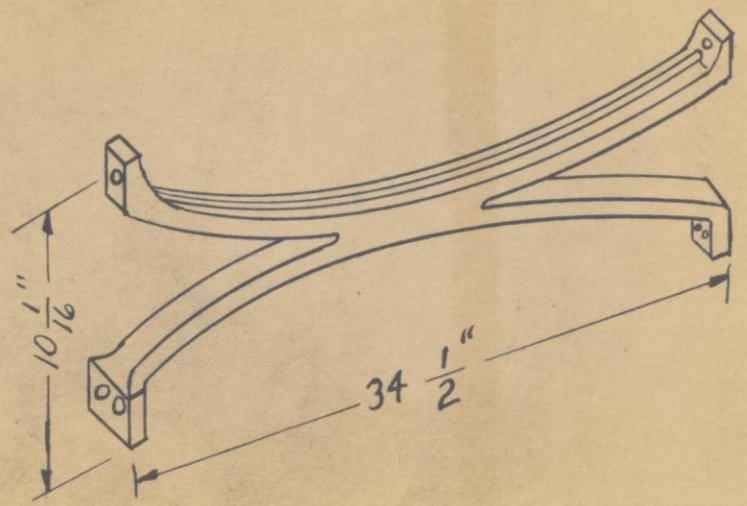

SPACER - MASHEK TRUCK

SEE B. P. NO. 13482-KC PATTERN NO. 1668

HAMILTON MFG. CO.

DO NOT REMOVE THIS LEAF FROM BOOK

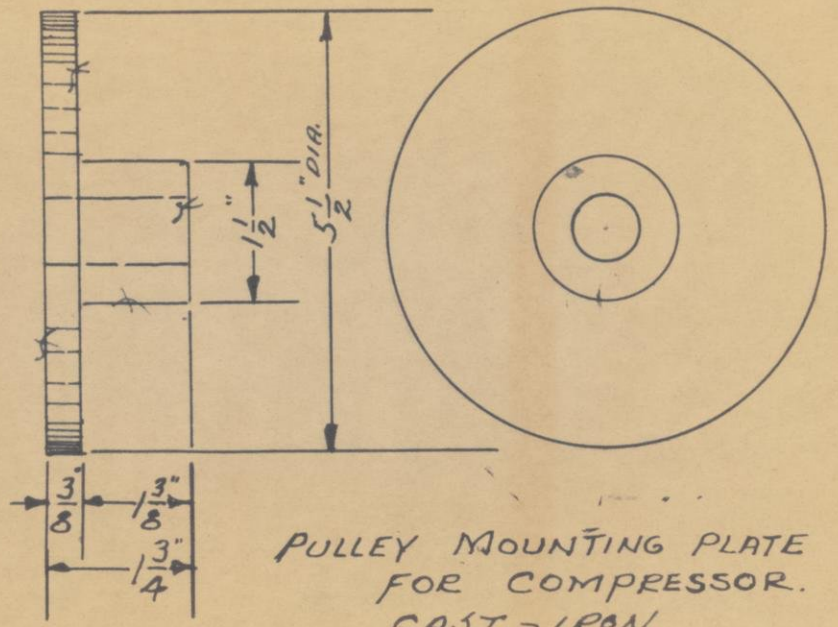

DATE- 4-15-49.

PULLEY MOUNTING PLATE
FOR COMPRESSOR.
CAST-IRON

SEE B. P. NO.

PATTERN NO. 1672

÷ ICE-LITE ÷

HAMILTON MFG. CO.

DO NOT REMOVE THIS LEAF FROM BOOK

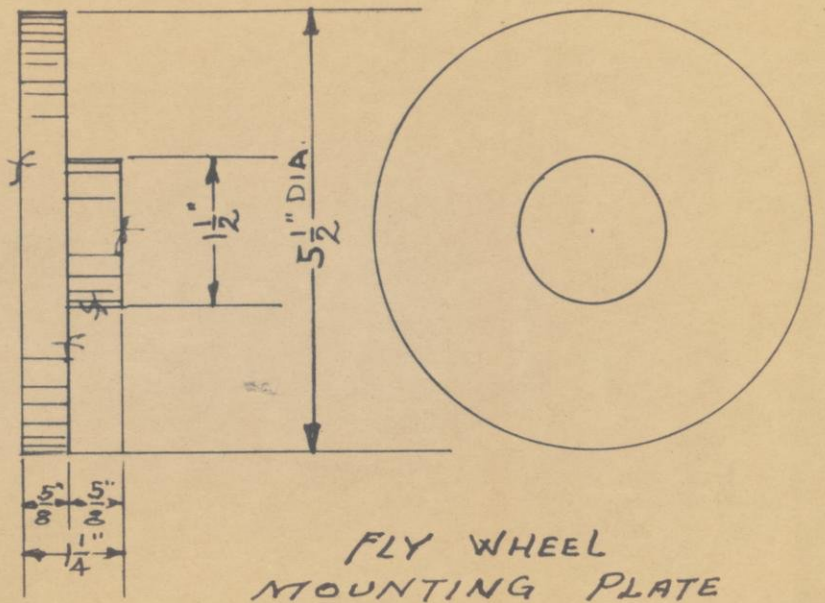

DATE- 4-15-49

FLY WHEEL
MOUNTING PLATE
CAST IRON

SEE B. P. NO.

PATTERN NO. 1673

÷ICE LITE÷

15 3/8 — 14 7/8"

15 3 8

14 15/16

14 7/8

4 6/16

7/16

HAMILTON MFG. CO.

DO NOT REMOVE THIS LEAF FROM BOOK

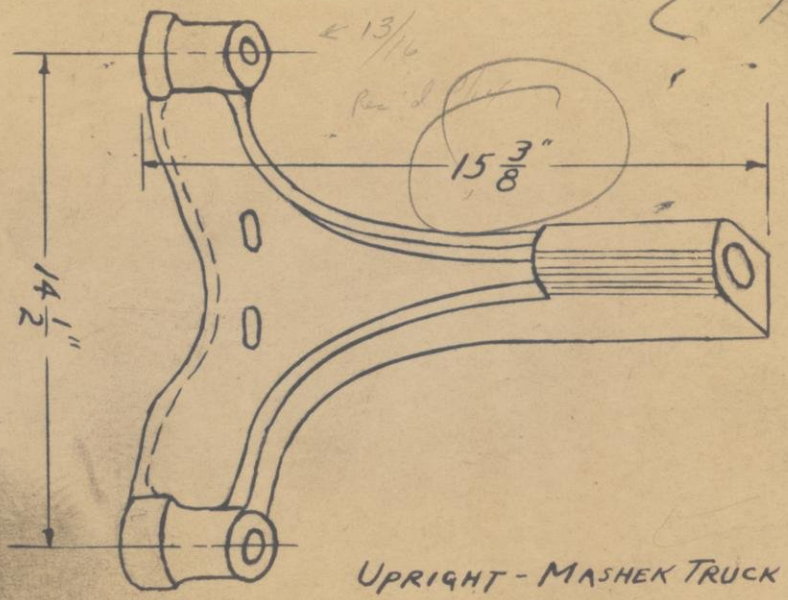

DATE- 1-12-49

UPRIGHT - MASHEK TRUCK

SEE B. P. NO. 13482-KB · PATTERN NO. 1674

HAMILTON MFG. CO.

DO NOT REMOVE THIS LEAF FROM BOOK

DATE- 12-15-45 GAC

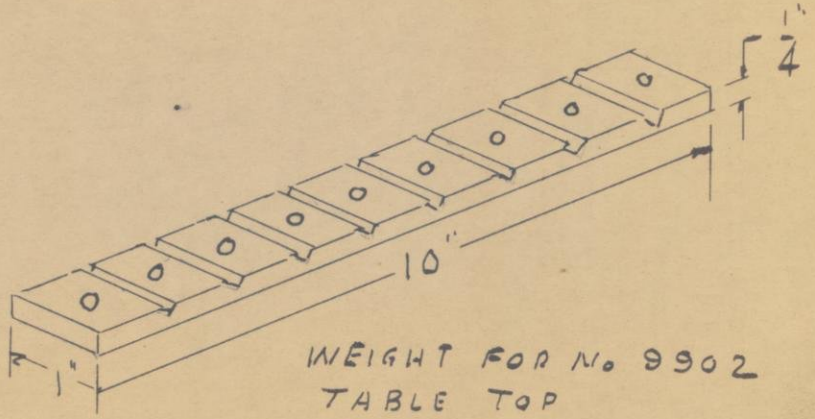

WEIGHT FOR No 9902
TABLE TOP
CAST IRON

SEE B. P. NO. 9902-1XC

PATTERN NO. 1675

HAMILTON MFG. CO.

DO NOT REMOVE THIS LEAF FROM BOOK

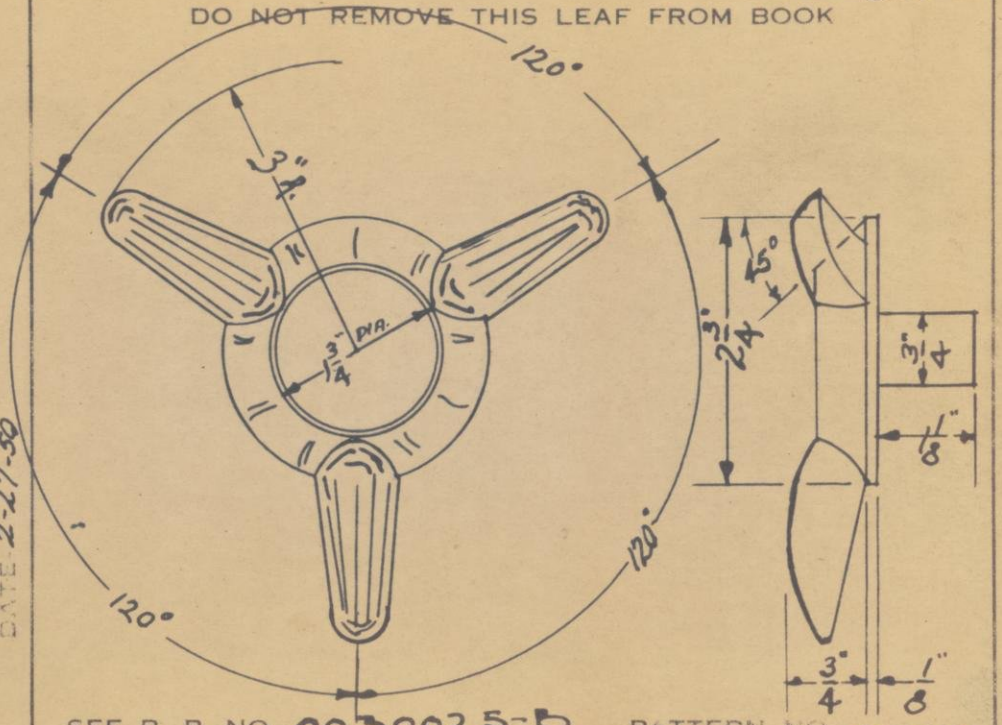

DATE 2-27-50

SEE B. P. NO. 0030025-B

PATTERN NO. 1680

HAMILTON MFG. CO.

DO NOT REMOVE THIS LEAF FROM BOOK

DATE- 2-28-50

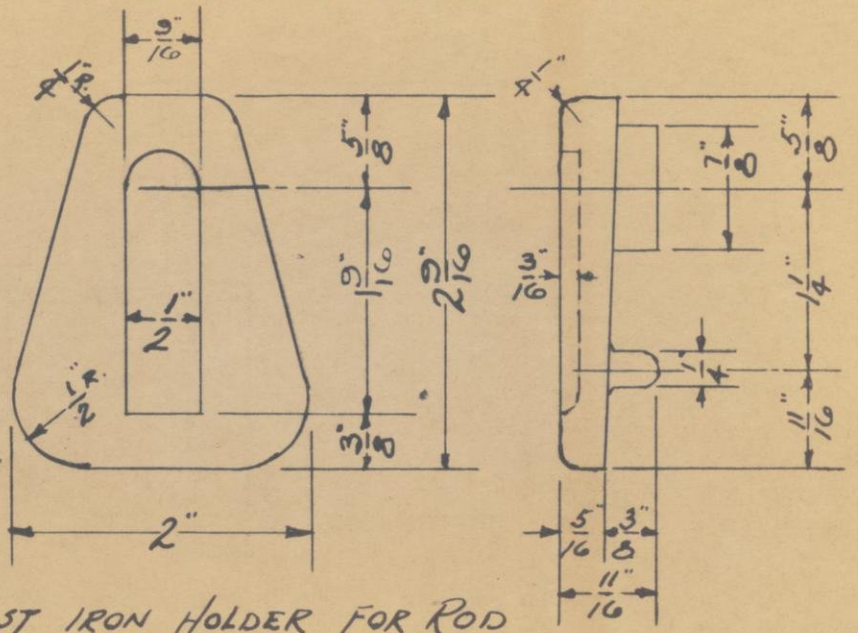

CAST IRON HOLDER FOR ROD

SEE B. P. NO. 0030025-C PATTERN NO. 1681

HAMILTON MFG. CO.

DO NOT REMOVE THIS LEAF FROM BOOK

DATE- 10-11-50

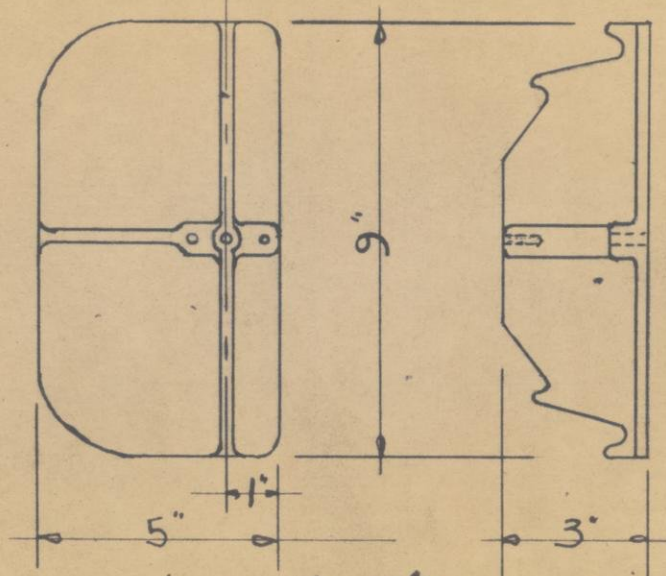

LONG HALF DECK PLATE

SEE B. P. NO. R-6030-J PATTERN NO. 1682

HAMILTON MFG. CO.

DO NOT REMOVE THIS LEAF FROM BOOK

DATE- 10-11-50

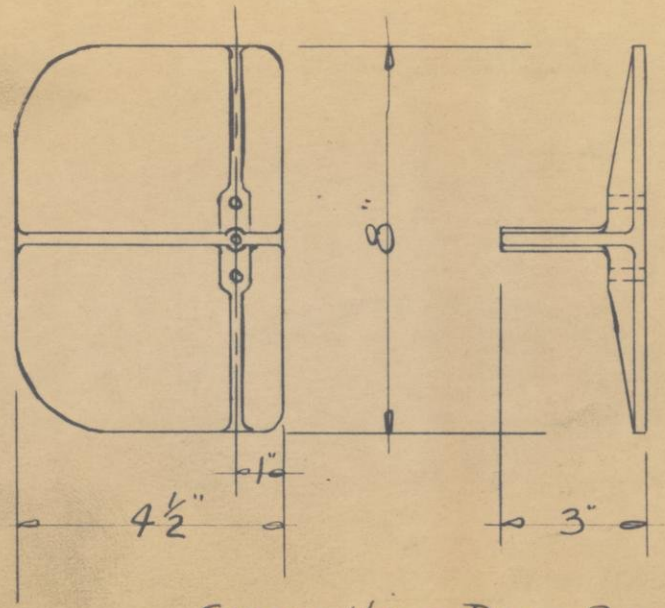

SHORT HALF DECK PLATE

SEE B. P. NO. R-6030-K PATTERN NO. 1683

HAMILTON MFG. CO.

DO NOT REMOVE THIS LEAF FROM BOOK

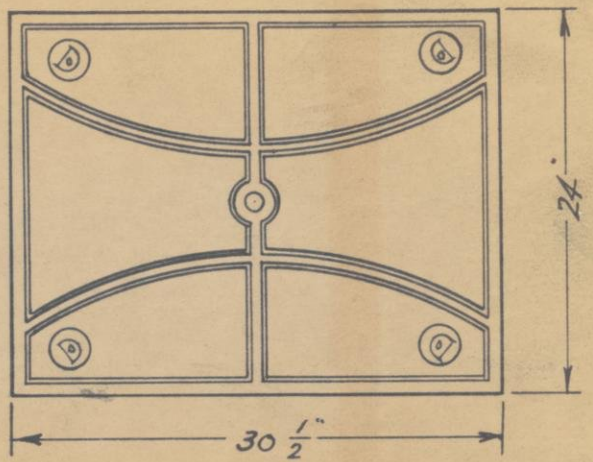

CAST IRON TOP FOR SMOUSE TRUCK

DATE- 1-25-51

SEE B. P. NO. 2614C01-2

PATTERN NO. 1684

HAMILTON MFG. CO.

OK

DO NOT REMOVE THIS LEAF FROM BOOK

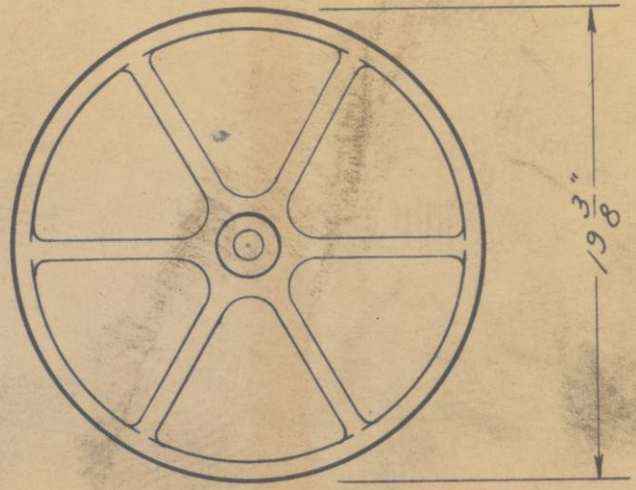

CAST IRON HAND WHEEL

DATE-1-25-51

SEE B. P. NO 2614C01-3

PATTERN NO. 1685

HAMILTON MFG. CO.

DO NOT REMOVE THIS LEAF FROM BOOK

OK

DATE- 1-25-51

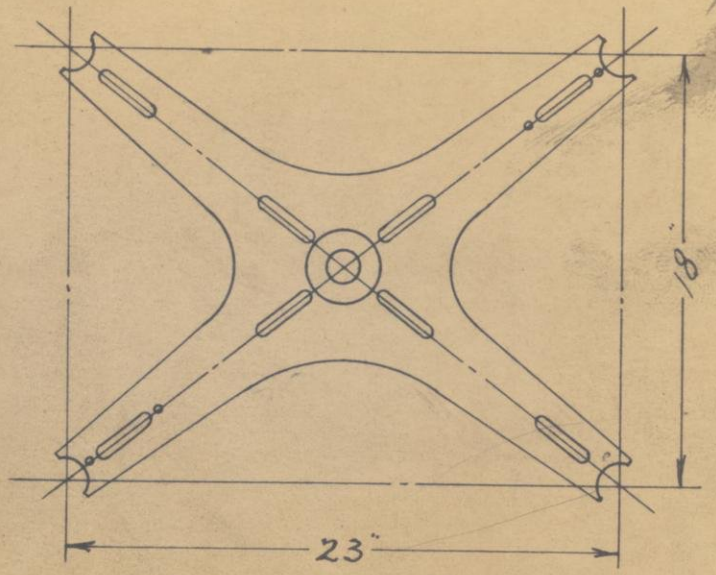

CAST IRON FRAME

SEE B. P. NO 2614C01-4 PATTERN NO. 1686

HAMILTON MFG. CO.

DO NOT REMOVE THIS LEAF FROM BOOK OK

DATE- 1-25-51

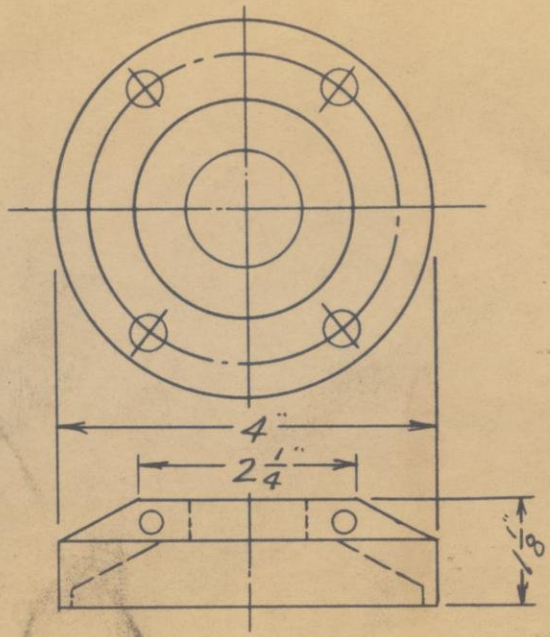

CAST IRON COLLAR

SEE B. P. NO. 2614C01-5 PATTERN NO. 1687

HAMILTON MFG. CO.

DO NOT REMOVE THIS LEAF FROM BOOK

OK

REVISED - 12-2-52

DATE - 1-25-51

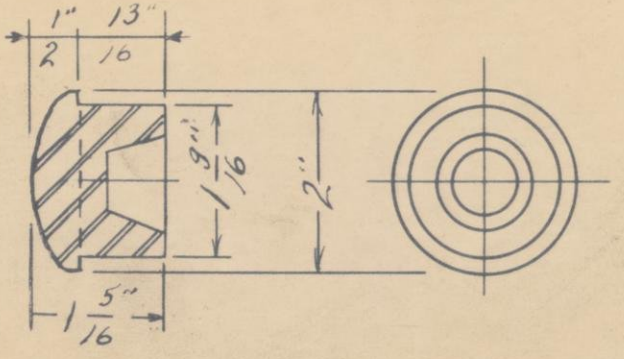

CAST IRON PLUG FOR PIPE LEGS.

SEE B. P. NO. 2614C01-5

PATTERN NO. 1688

HAMILTON MFG. CO.

DO NOT REMOVE THIS LEAF FROM BOOK

DATE 3-27-51

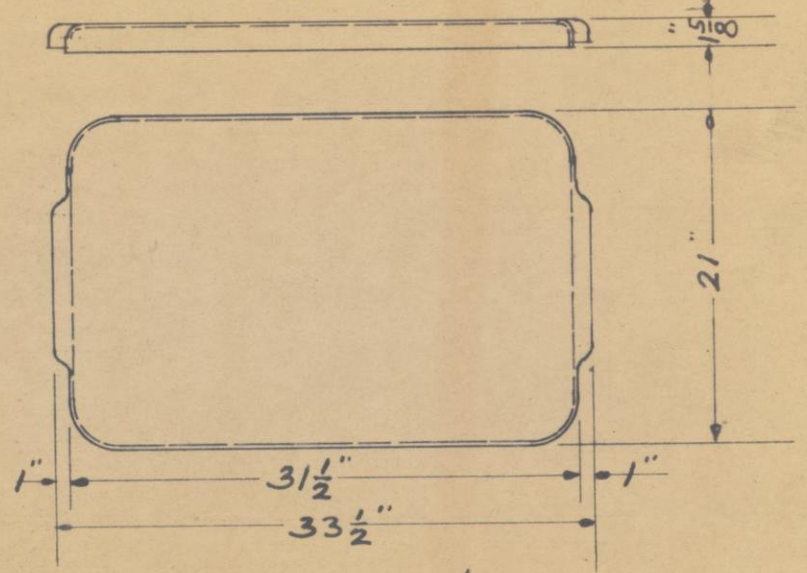

OUTSIDE TOP FOR * L-1083 DOUBLE DOWN DRAFT FUME HOOD

See B.P. D-320515

SEE B. P. NO. L-1083-A

PATTERN NO. 1690

HAMILTON MFG. CO.

DO NOT REMOVE THIS LEAF FROM BOOK

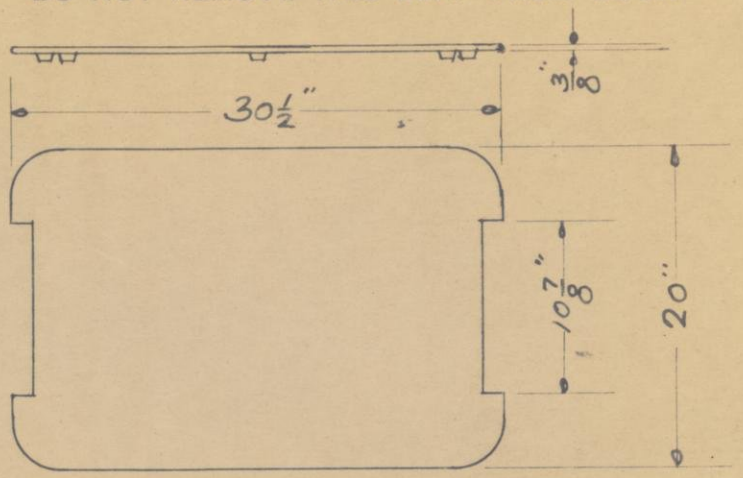

INSIDE TOP FOR #L-1083 DOUBLE DOWN DRAFT FUME HOOD

DATE 3-27-51

See B.P. D-320 517

SEE B. P. NO. L-1083-B PATTERN NO. 1691

HAMILTON MFG. CO.

DO NOT REMOVE THIS LEAF FROM BOOK

OK

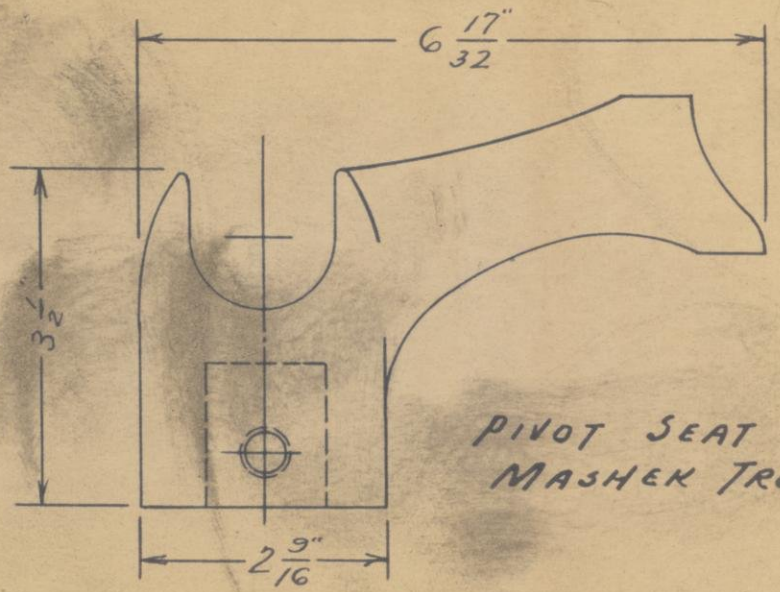

PIVOT SEAT FOR MASHER TRUCK

DATE 11-26-51

SEE B. P. NO. 2617C01-B

PATTERN NO. 1692

HAMILTON MFG. CO.

DO NOT REMOVE THIS LEAF FROM BOOK

OK

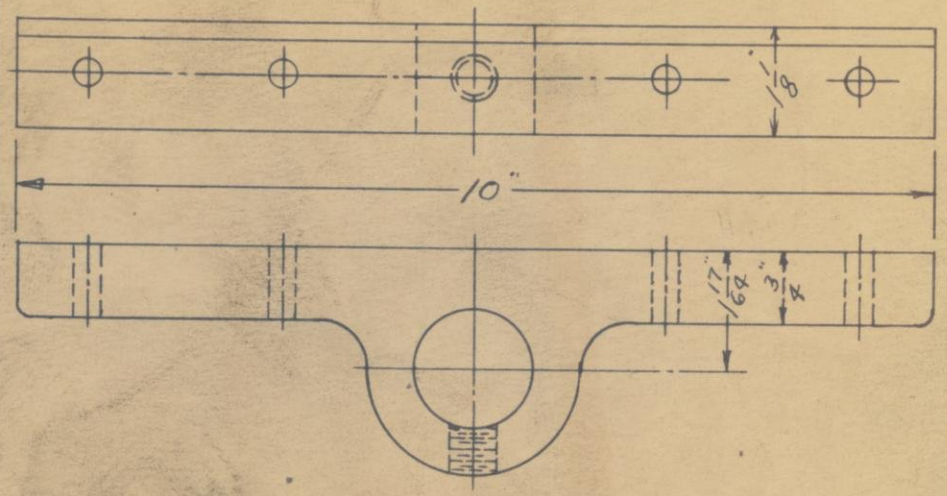

DATE- 11-26-51

BRACKET FOR MASHEK TRUCK

SEE B. P. NO 2617C01-B PATTERN NO. 1693

HAMILTON MFG. CO.

DO NOT REMOVE THIS LEAF FROM BOOK

OK

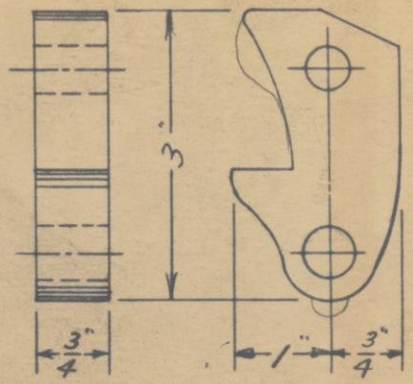

DATE- 11-26-51

PALL FOR MASHEK TRUCK

SEE B. P. NO. 2617C01-B PATTERN NO. 1695

HAMILTON MFG. CO.

DO NOT REMOVE THIS LEAF FROM BOOK OK

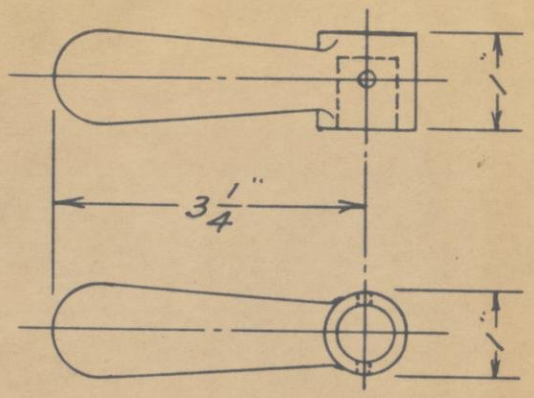

DATE- 11-26-51

HANDLE FOR PALL

SEE B. P. NO. 2617C01-B PATTERN NO. 1696

HAMILTON MFG. CO.

DO NOT REMOVE THIS LEAF FROM BOOK OK

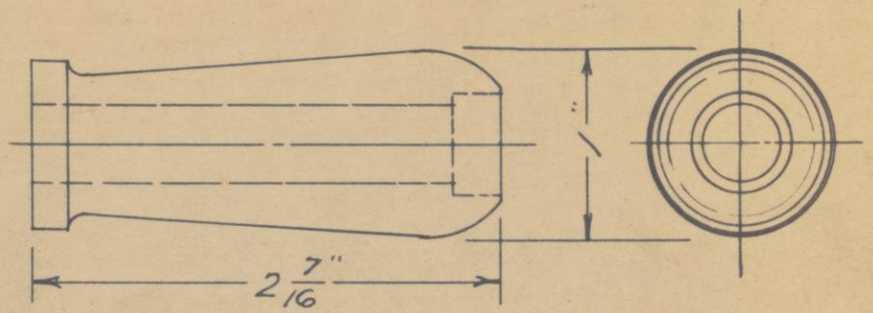

HANDLE FOR CRANK

DATE 11-26-51

SEE B. P. NO 2617C01-B PATTERN NO. 1697

HAMILTON MFG. CO.

DO NOT REMOVE THIS LEAF FROM BOOK OK

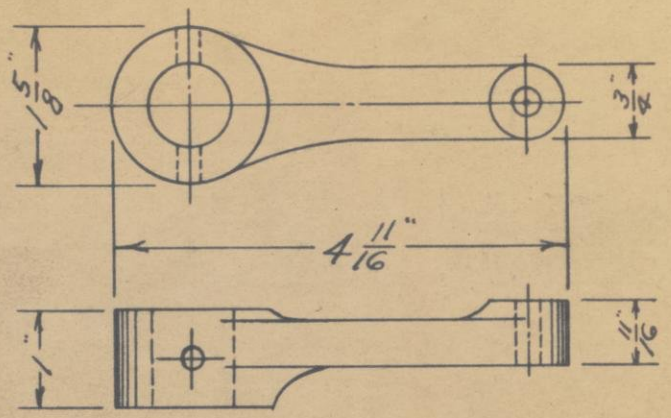

CRANK FOR MASHEK TRUCK

DATE- 11-26-51

SEE B. P. NO. 2617C01-B PATTERN NO. 1698

HAMILTON MFG. CO.

DO NOT REMOVE THIS LEAF FROM BOOK

Watch for this surface to be smooth See Dave.

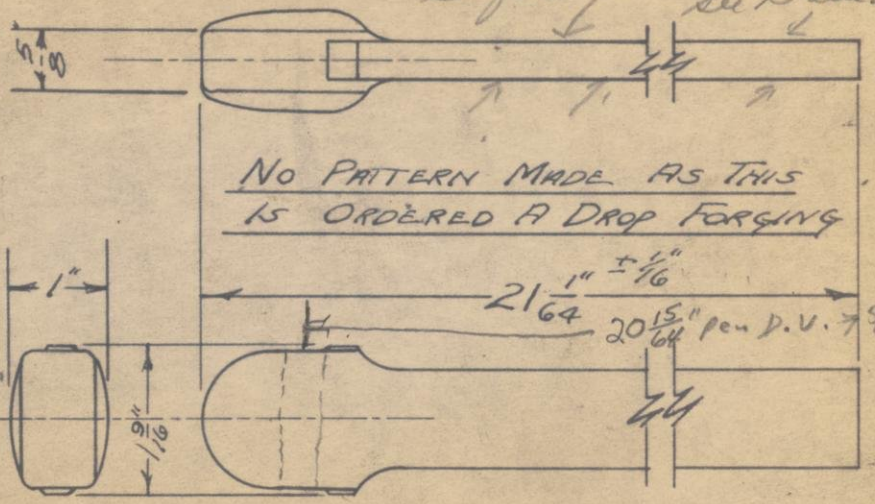

NO PATTERN MADE AS THIS IS ORDERED A DROP FORGING

DATE-

EXTENSION ROD

SEE B. P. NO. 150249 9-23-53 PATTERN NO. 1699

HAMILTON MFG. CO.

OK

DO NOT REMOVE THIS LEAF FROM BOOK

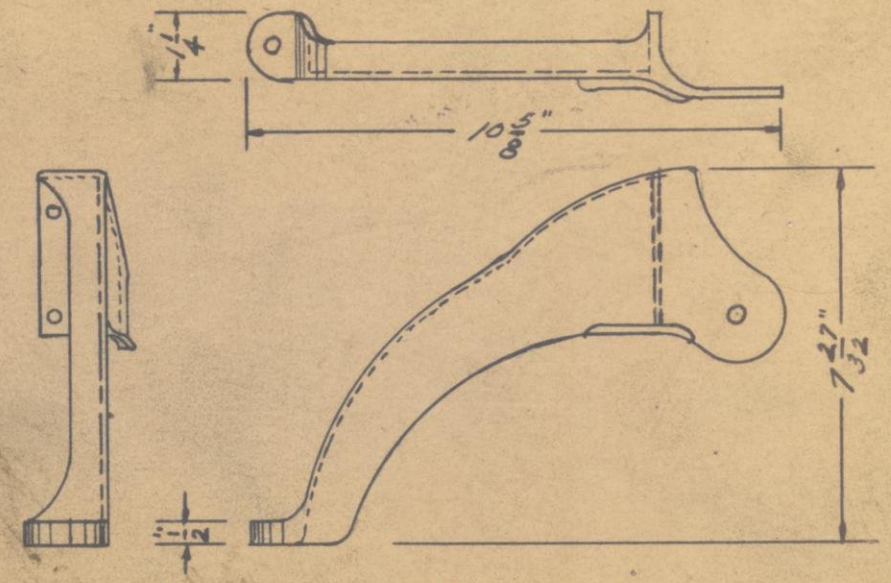

DATE 1-31-52 R.O.G

CAST IRON FOOT BRACKET

MATERIAL - CAST IRON MAKE R & L

SEE B. P. NO 1731-3 PATTERN NO 1700 FOR L
1701 FOR R

NOTE- PAT. N° WAS 1689 R & L - 10/10/52

HAMILTON MFG. CO.

DO NOT REMOVE THIS LEAF FROM BOOK

TRIP ROD CLAMP.

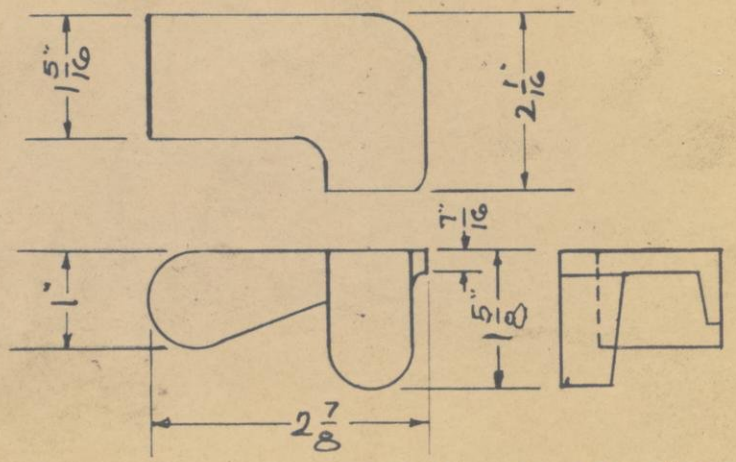

DATE- 4-7-47.

RIGHT & LEFT REQ'D. MATERIAL - CAST STEEL

SEE B. P. NO. 9905 AP-H. PATTERN NO 1702-L. 1703-R

PAT. Nº. WAS 1639 R & L 11-3-52

HAMILTON MFG. CO.

DO NOT REMOVE THIS LEAF FROM BOOK

DATE 2-10-50

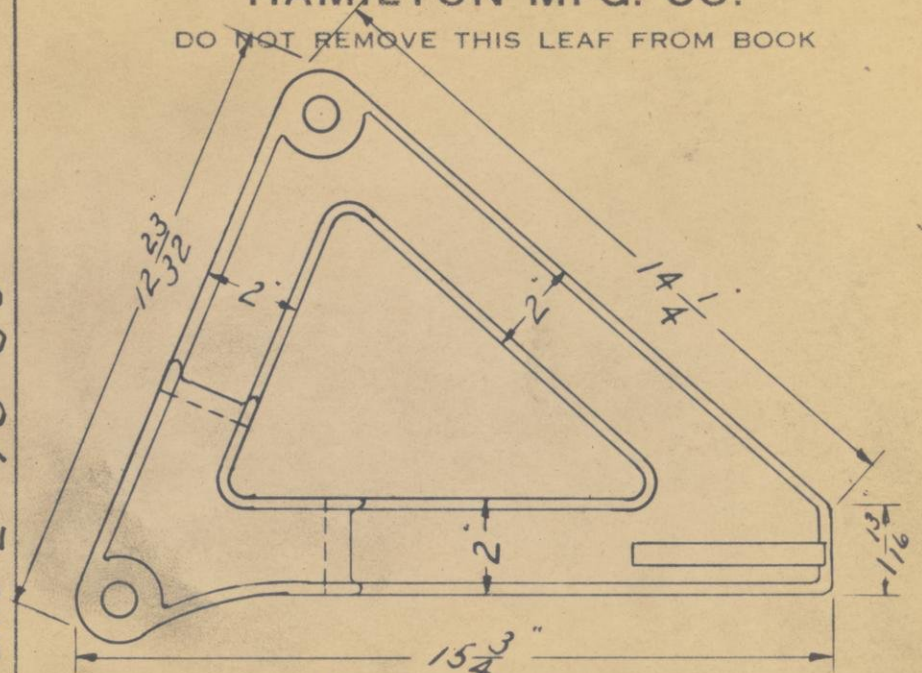

FORK FOR No. 13491 DUMPING TRUCK

SEE B. P. NO. 13491-B PATTERN NO 1704-L. 1705-R.

PAT. Nº WAS 1677 L&R 11-3-52

THE HAMILTON MFG. CO.

DON'T REMOVE THIS LEAF FROM BOOK

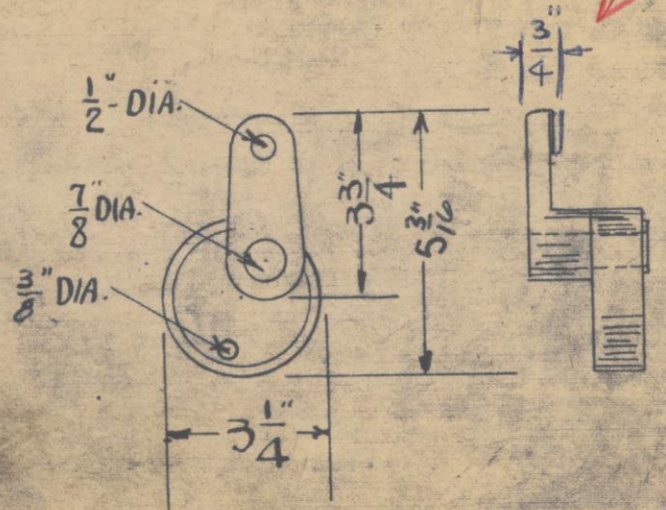

ECCENTRIC FOR SMOUSE TRUCK

PATTERN NO. 1706-L.H.
1707-R.H.

SEE B. P. NO. 380-C

PAT. Nº WAS 749 R. & L. 11-3-52

THE HAMILTON MFG. CO.

DON'T REMOVE THIS LEAF FROM BOOK

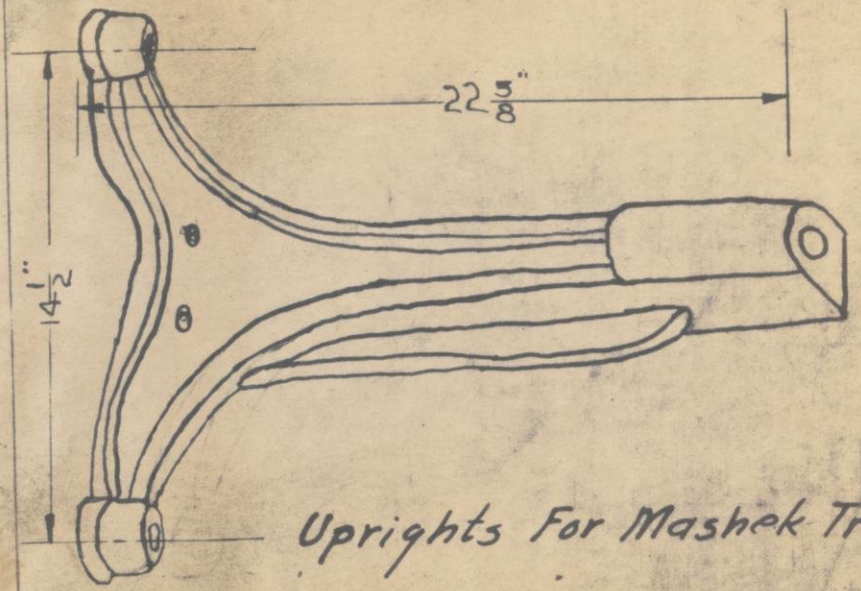

Uprights For Mashek Truck

PATTERN NO. 1708-L.H.
1709-R.H

SEE B. P. NO. 403-C

PAT. No. WAS 776 L & R 11-3-52 — REVISED 3-27-53 L.A.

THE HAMILTON MFG. CO.

DON'T REMOVE THIS LEAF FROM BOOK

OK

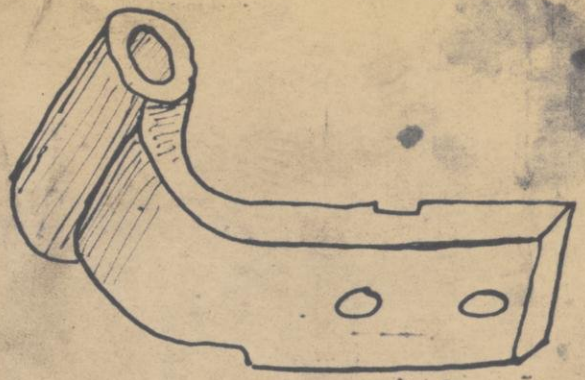

Support for Mashek Truck

PATTERN NO. 1710 FL.
1711 - R.

SEE B. P. NO. 407-C

PAT. NO. WAS 781 R. & L. 11-3-52

THE HAMILTON MFG. CO.

DON'T REMOVE THIS LEAF FROM BOOK

O K

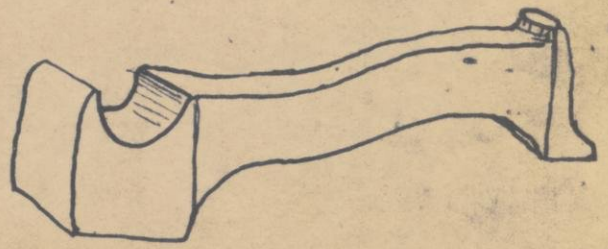

Pivot Seat for Mashek Truck

PATTERN NO. 1712-L.H.
1713-R.H.

SEE B. P. NO. 408-C

PAT. Nº WAS 782 R&L 11/3/52

THE HAMILTON MFG. CO.

DON'T REMOVE THIS LEAF FROM BOOK



Bracket for Mashek Truck

PATTERN NO. 1714 L.H
1715 R.H

SEE B. P. NO. 410-C

PAT. Nº WAS 784 L. & R. 11-3-52

HAMILTON MFG. CO.

DO NOT REMOVE THIS LEAF FROM BOOK

OK

DATE- 4-29-37

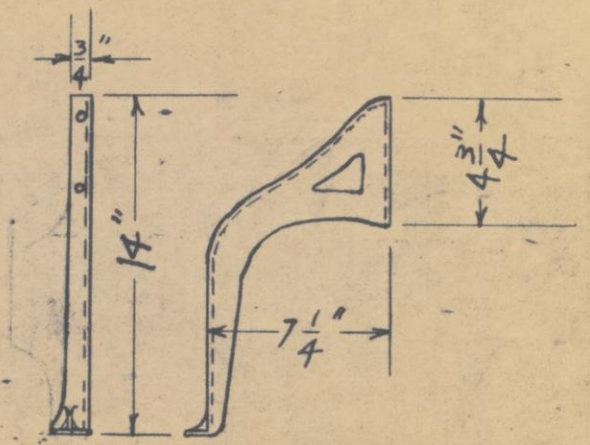

BRACKET FOR COASTER CHAIR RAIL

SEE B. P. NO. 19066 XC

PATTERN NO 1716-L.H.
1717-R.H.

PAT. NO. WAS 1393 R.&L. 11-3-52.

HAMILTON MFG. CO.

DO NOT REMOVE THIS LEAF FROM BOOK

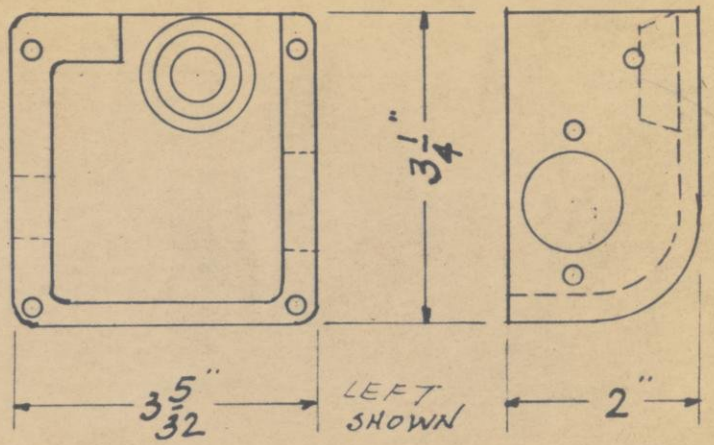

DATE-

INSIDE SECTION OF GEAR BOX
FOR ALL PURPOSE EX. TABLES
1 RIGHT & 1 LEFT REQ'D.

SEE B. P. NO. 9820 AP-D PATTERN NO. 1719-R 1718-L

PAT. Nº WAS 1604 R & L 11-3-52.

HAMILTON MFG. CO.

DO NOT REMOVE THIS LEAF FROM BOOK

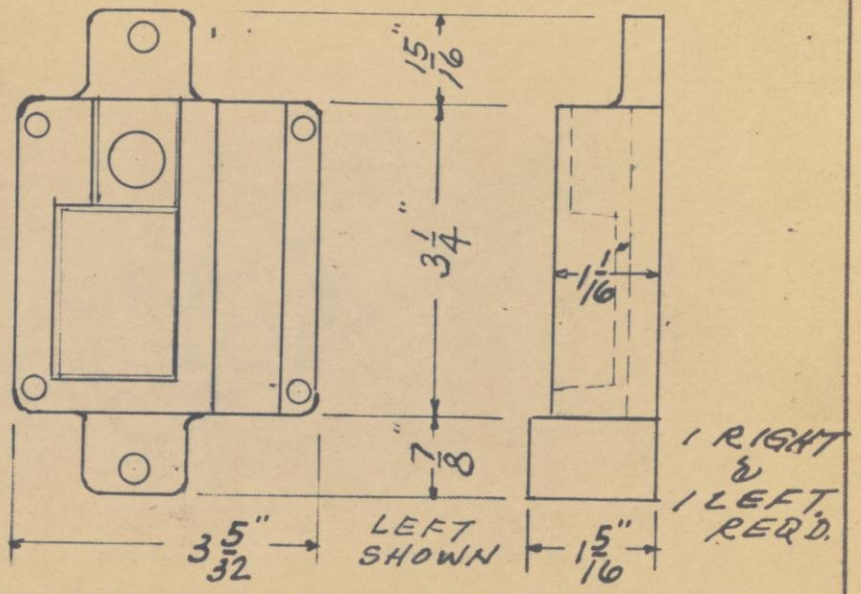

DATE-

OUTSIDE SECTION OF GEAR BOX FOR ALL PURPOSE EX. TABLE

SEE B. P. NO. 9820 AP-D PATTERN NO. 1721-R. 1720-L.

PAT. Nº WAS 1605 R & L 11-3-52

HAMILTON MFG. CO.

DO NOT REMOVE THIS LEAF FROM BOOK

PALL PIVOT
FOR MASHEK TRUCK
DISCONTINUED

DATE- 7-8-53.

SEE B. P. NO. 2617C01-B(N.G.) PATTERN NO. 1722

HAMILTON MFG. CO.

DO NOT REMOVE THIS LEAF FROM BOOK

PALL PIVOT
FOR MASHEK TRUCK
DISCONTINUED

DATE- 7-8-53.

SEE B. P. NO. 2617C01-B(N.G.) PATTERN NO. 1722

HAMILTON MFG. CO.

DO NOT REMOVE THIS LEAF FROM BOOK

DATE-6-8-53 J.A.H. REVISED 9-21-53

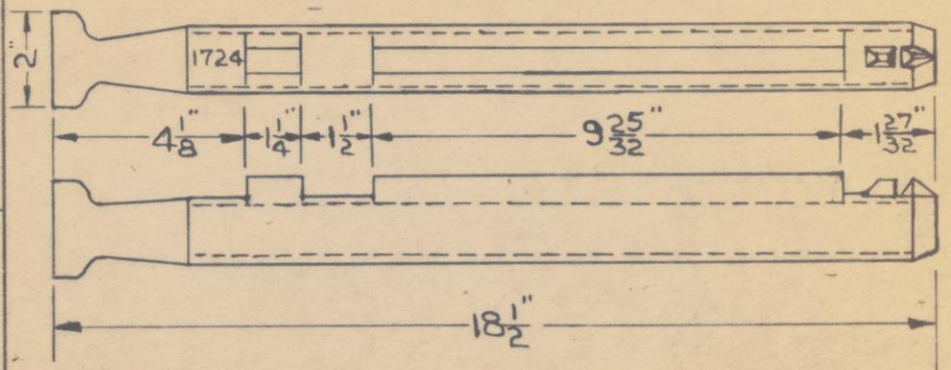

BURNER FOR DRYER

9-23-53

SEE B. P. NO. 8-130

PATTERN NO. 1724

HAMILTON MFG. CO.

DO NOT REMOVE THIS LEAF FROM BOOK

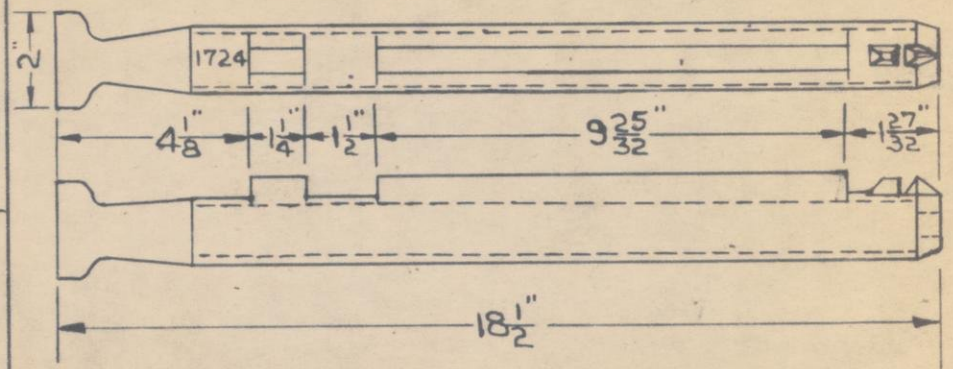

DATE-6-8-53 J.Q.H.

BURNER FOR DRYER

SEE B. P. NO. 8-130

PATTERN NO. 1724

HAMILTON MFG. CO.

DO NOT REMOVE THIS LEAF FROM BOOK

DATE- 6-2-53 J.O.F.

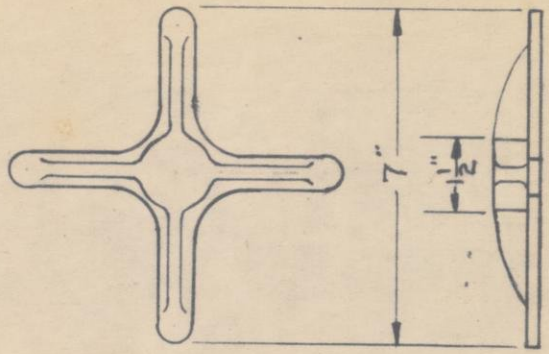

SPIDER FOR TYPEWRITER TABLE

SEE B. P. NO. 47647

PATTERN NO. 1725

HAMILTON MFG. CO.

DO NOT REMOVE THIS LEAF FROM BOOK

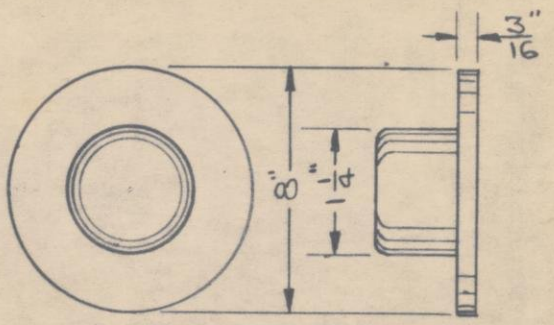

SLEEVE FOR TYPEWRITER TABLE

SEE B. P. NO. 47647 PATTERN NO. 1726

DATE- 6-3-53 J. A. F.

HAMILTON MFG. CO.

DO NOT REMOVE THIS LEAF FROM BOOK

DATE- 6-4-53 H.Q.H.

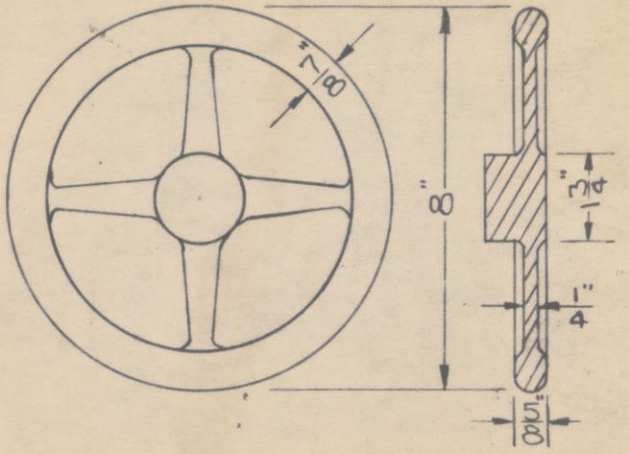

HAND WHEEL FOR TYPEWRITER TABLE

SEE B. P. NO. 47647 PATTERN NO. 1727

THE HAMILTON MFG. CO.

DONT REMOVE THIS LEAF FROM BOOK

NOTE - PAT. Nº WAS 597 REL- 1-2-53

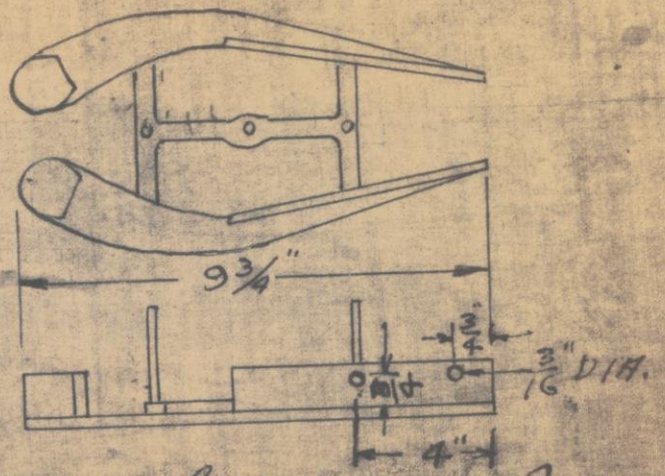

Iron for foot Rest on Fry Table

PATTERN NO. 1728 - RH
1729 - LH

SEE B. P. NO. 269

No Drawing

HAMILTON MFG. CO.

DO NOT REMOVE THIS LEAF FROM BOOK

FOOT REST BRACKET #1729 (L.H.) FOR #110 DWG. TABLE OBSOLETE

DATE-

SEE B. P. NO. 110 & 156 BW PATTERN NO. 1729

HAMILTON MFG. CO.

DO NOT REMOVE THIS LEAF FROM BOOK

FOOT REST BRK'T #1728 (R.H.) FOR #110 DWG. TABLE OBSOLETE

DATE-

SEE B. P. NO. 110 & 156 BW PATTERN NO. 1728

HAMILTON MFG. CO.

DO NOT REMOVE THIS LEAF FROM BOOK

NOT USED

DATE-

SEE B. P. NO.

PATTERN NO. 1730

HAMILTON MFG. CO.

DO NOT REMOVE THIS LEAF FROM BOOK

DATE- 6-3-53 F.O.H.

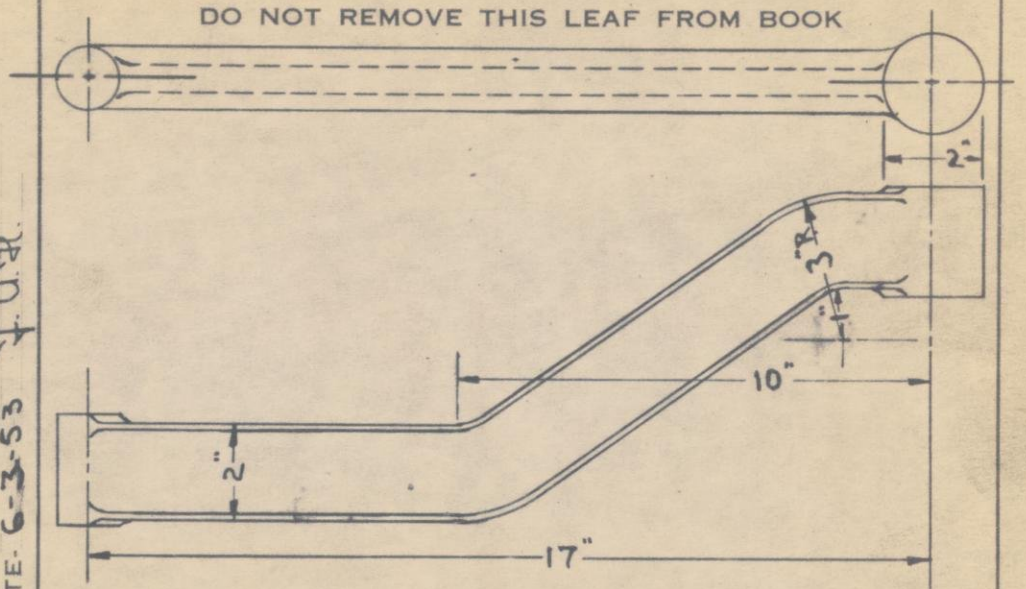

SEAT BRACKET FOR OPAQUING TABLE

SEE B. P. NO. 0032751-C PATTERN NO. 1731

PATTERN Nº WAS 331 & 331A 3-16-53

THE HAMILTON MFG. CO.

DONT REMOVE THIS LEAF FROM BOOK

O.K.

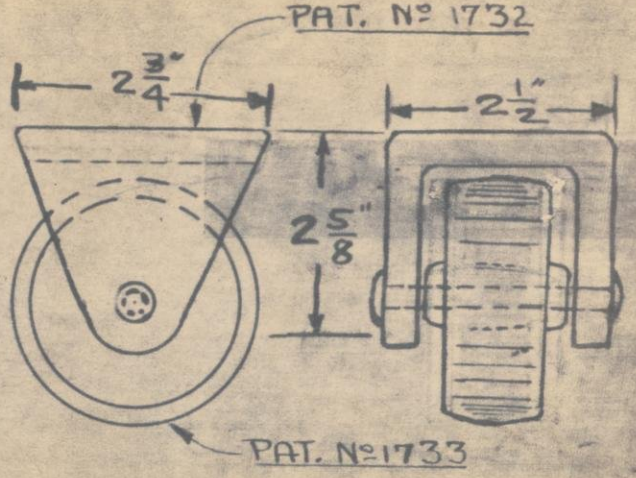

Front Caster for Magazine Drawer

PATTERN Nos 1732 - FORK
1733 - WHEEL

SEE B. P. NO. -5-C.
-202-6

HAMILTON MFG. CO.

DO NOT REMOVE THIS LEAF FROM BOOK

DATE- 5-27-53 - T.O.F.

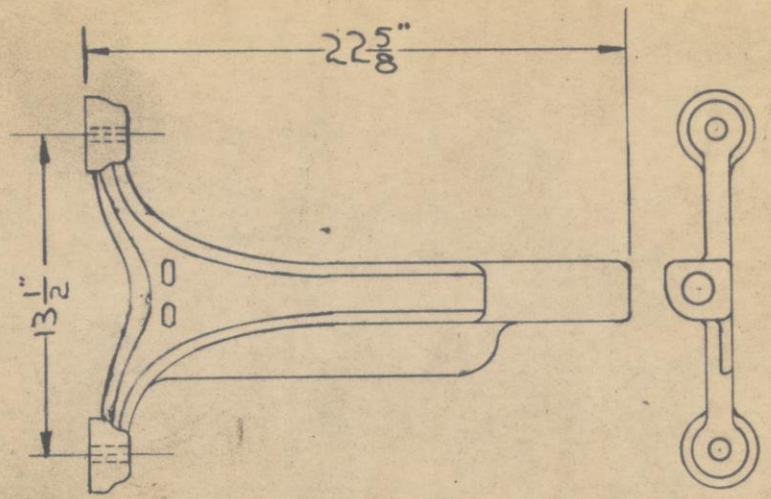

UPRIGHT FOR MASHEK TRUCK

SEE B. P. NO. 2618 C01-B

PATTERN NO. 1734 R.H.
1735 L.H.

HAMILTON MFG. CO.

DO NOT REMOVE THIS LEAF FROM BOOK

DATE 11-18-53- A.U.G.

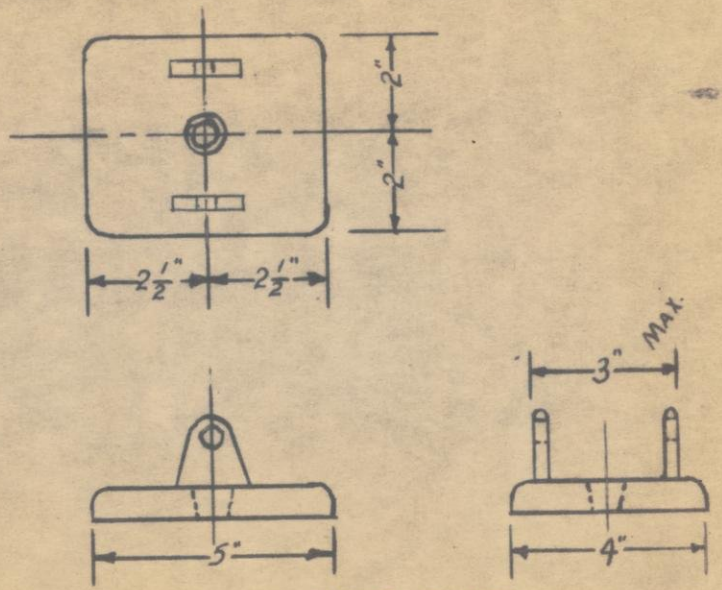

BASE PLATE

SEE B. P. NO. L-0033556-B PATTERN NO. 1737

HAMILTON MFG. CO.

DO NOT REMOVE THIS LEAF FROM BOOK

DATE 11-17-53- AJG.

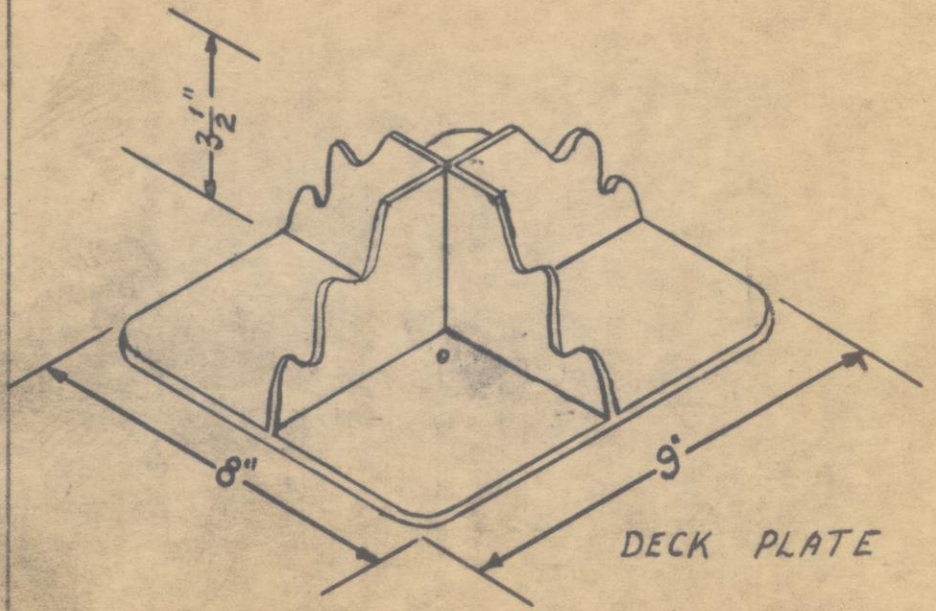

DECK PLATE

SEE B. P. NO. L-0033556-B PATTERN NO. 1738

HAMILTON MFG. CO.

DO NOT REMOVE THIS LEAF FROM BOOK

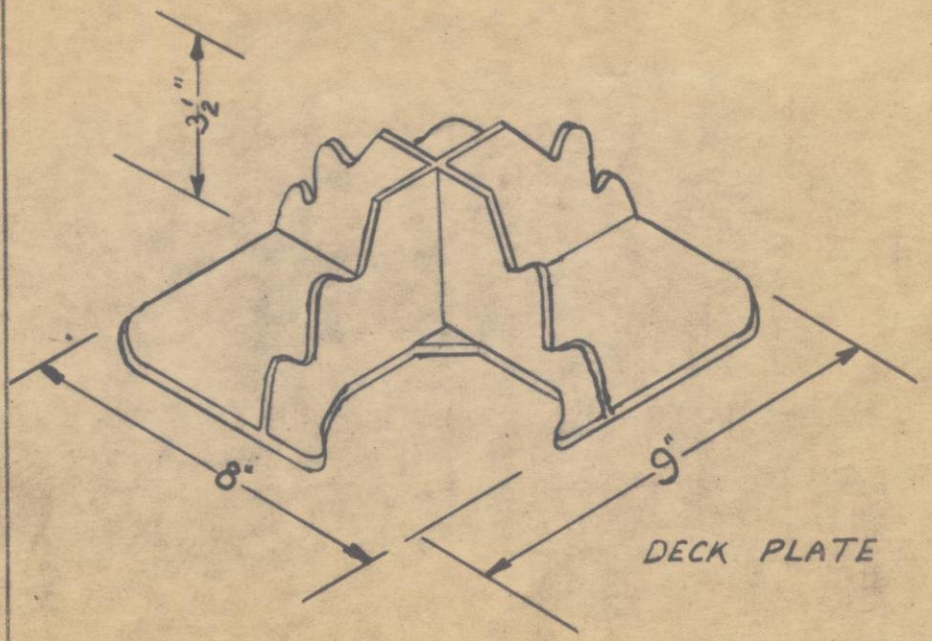

DECK PLATE

DATE 11-17-53. A.J.G.

SEE B. P. NO. L0033556-B

PATTERN NO. 1739

OCT 12 1962
A COPY, PREVIOUSLY ISSUED &
WITHOUT THIS STAMP, IS OBSOLETE.
HAMILTON MFG. CO.
ENGINEERING DEPT.

HAMILTON MFG. CO.

DO NOT REMOVE THIS LEAF FROM BOOK

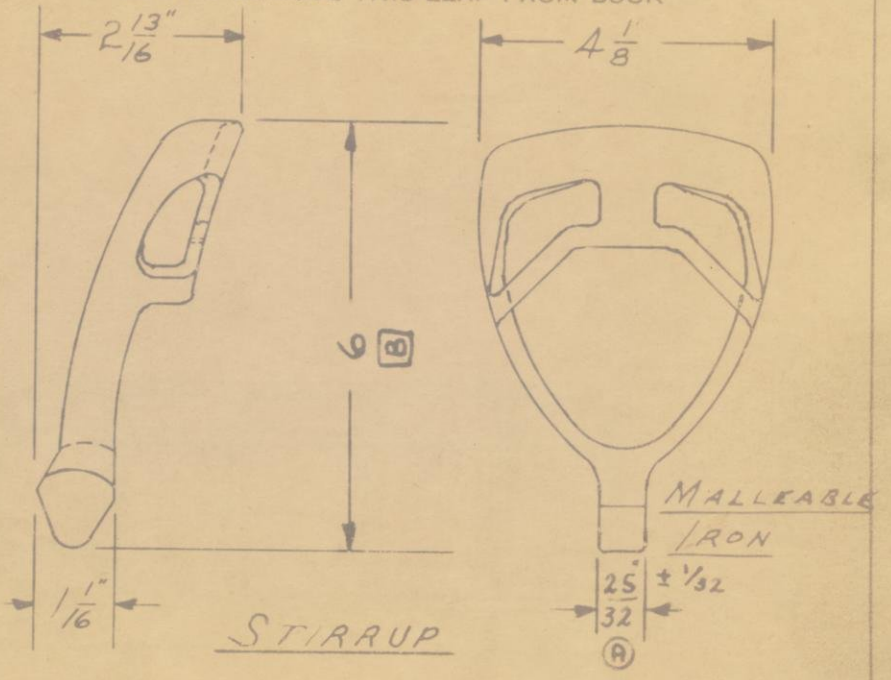

B DIM. WAS 5 5/16 OFH 9-4-62
A DIM. WAS .618-.622 J.W. 5-14-59
DATE 8-12-54 C.V.K.

SEE B. P. NO. 151002 + 151091

PATTERN NO. 1740

HAMILTON MFG. CO.

DO NOT REMOVE THIS LEAF FROM BOOK

DATE: 4-14-54 B.C.R.

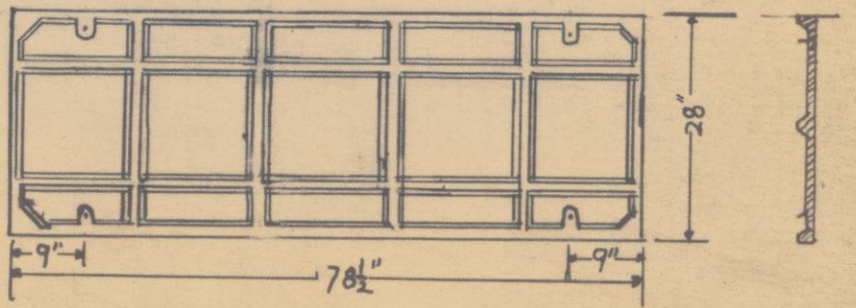

SEE B. P. NO. 0033989-B

~~MOULDING~~ PATTERN NO. 1741

HAMILTON MFG. CO.

DO NOT REMOVE THIS LEAF FROM BOOK

DATE 4-14-54 B.C.R.

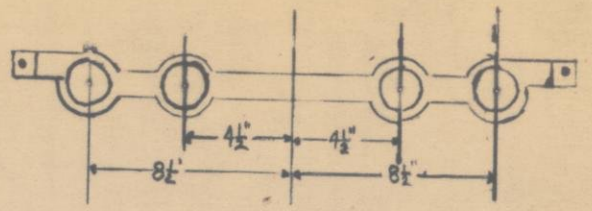

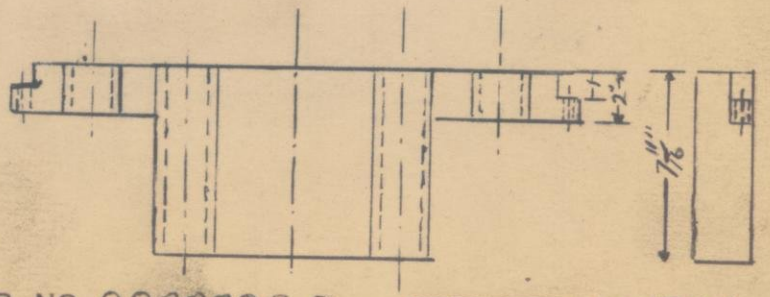

SEE B. P. NO. 0033989-C ~~MOULDING~~ PATTERN NO. 1742

HAMILTON MFG. CO.

DO NOT REMOVE THIS LEAF FROM BOOK

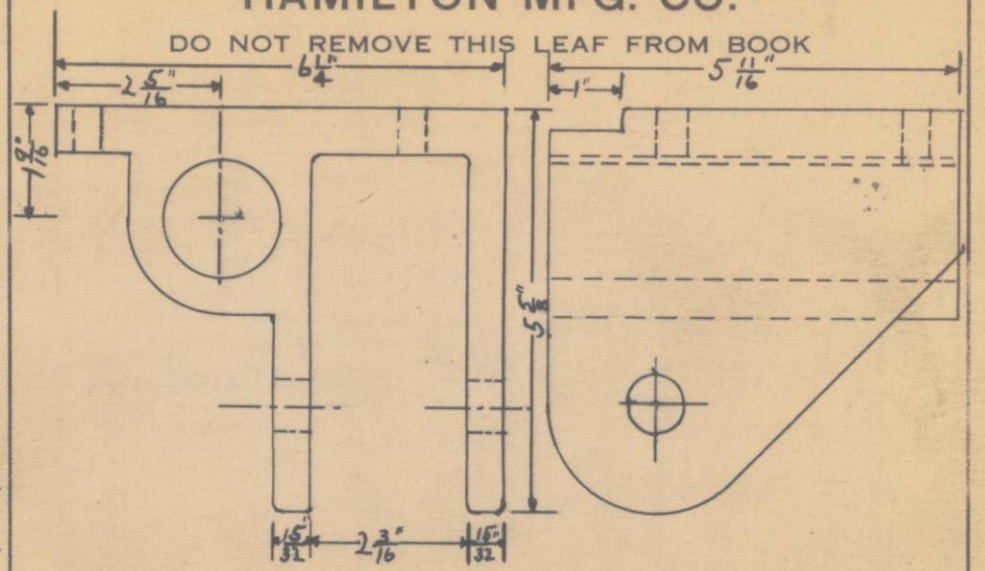

DATE- 4-14-54 B.C.R

SEE B. P. NO. 0033989-D

PATTERN NO. 1743

HAMILTON MFG. CO.

DO NOT REMOVE THIS LEAF FROM BOOK

DATE 4-14-54 B.C.R.

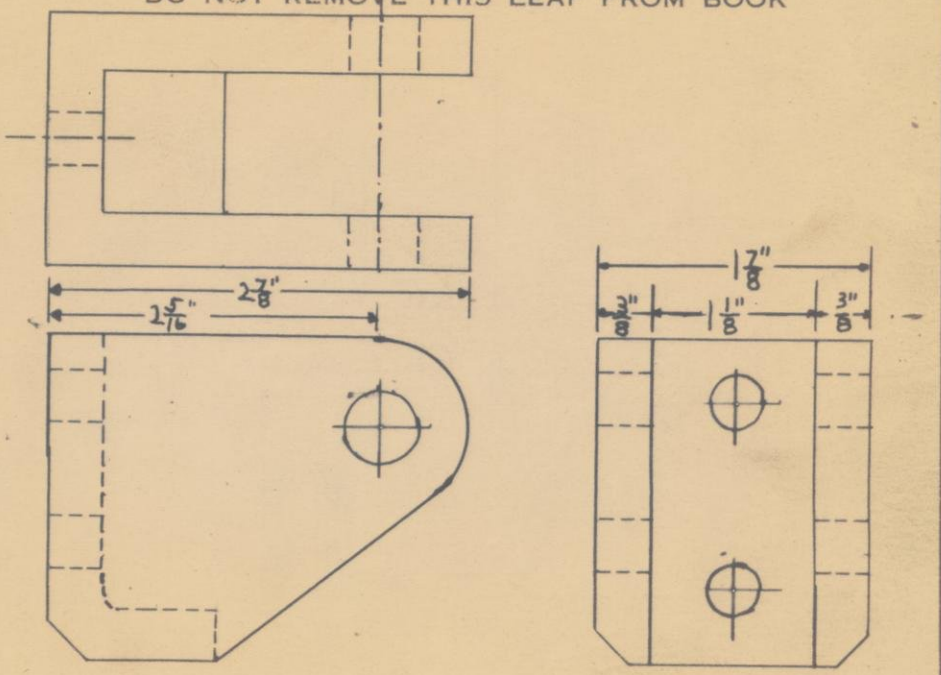

SEE B. P. NO. 0033989-D

PATTERN NO. 1744

HAMILTON MFG. CO.

DO NOT REMOVE THIS LEAF FROM BOOK

DATE: 6-2-54 D.A.W.

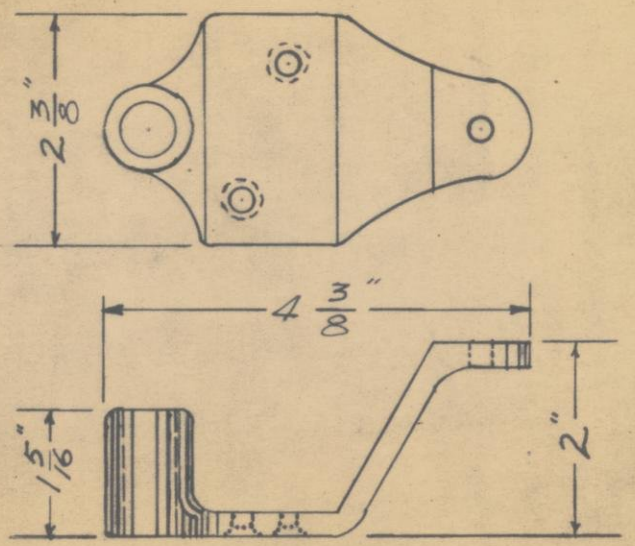

SEE B. P. NO. 12740 PATTERN NO. 1745

786
787

Man Grey Iron
foundry

7-226-1

HAMILTON INDUSTRIES

Phone Calls



For _____ At _____ (time)

From _____

Of _____ (Company)

Who left the following message: _____

Please call him ☐ her ☐ at _____ (telephone)

He ☐ She ☐ will call back _____

Other _____

_____

_____

_____

3-004

HAMILTON MFG. CO.

DO NOT REMOVE THIS LEAF FROM BOOK

DATE- 12-3-54- A.J.G.

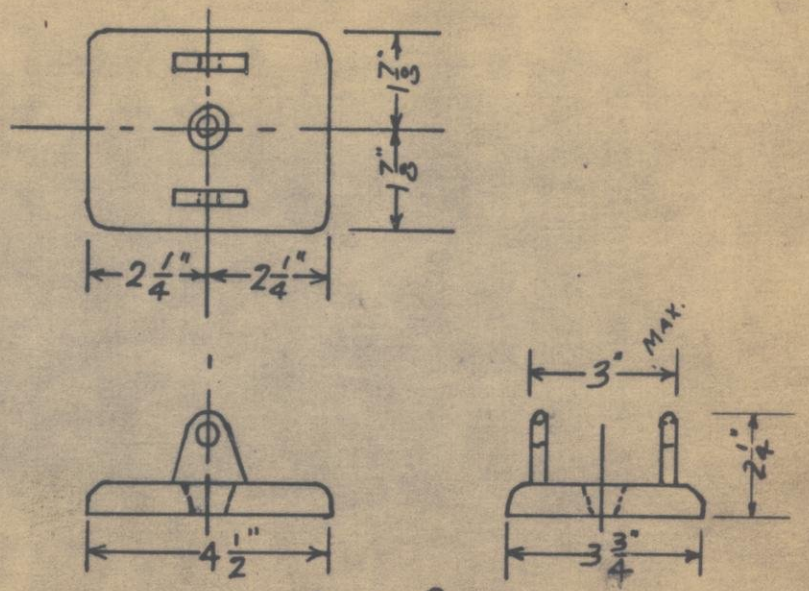

BASE PLATE

SEE B. P. NO. L-0034341 PATTERN NO. 1747

POST NO. 120—500—7-15-53

3-004

HAMILTON MFG. CO.

DO NOT REMOVE THIS LEAF FROM BOOK

DATE 12-3-54 A. J. G.

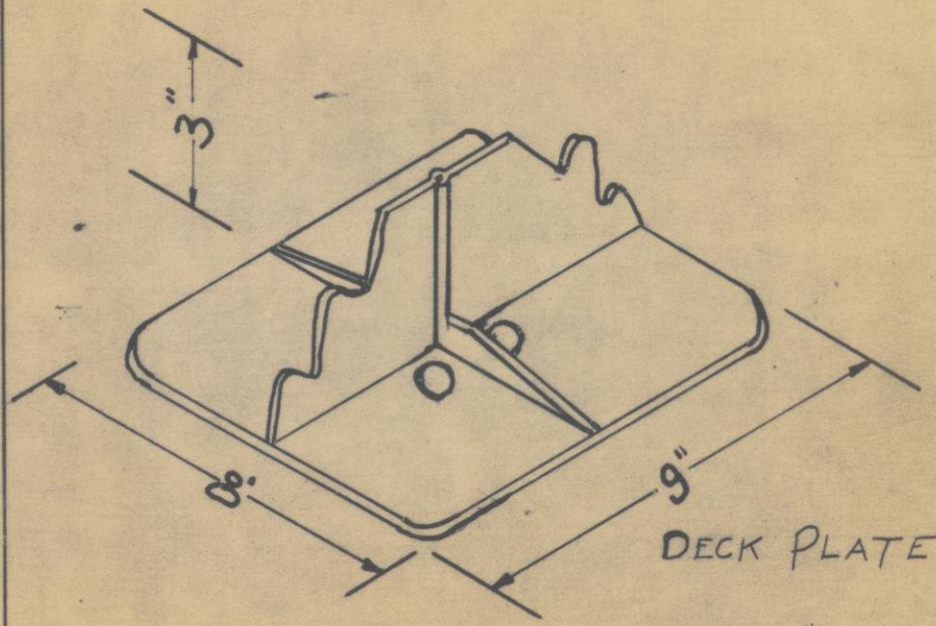

DECK PLATE

SEE B. P. NO. L0034341

PATTERN NO. # 1748

THIS PRINT IS

PUST NO. 120—500—7-15-53

3-004

HAMILTON MFG. CO.

DO NOT REMOVE THIS LEAF FROM BOOK

DATE- 7-15-55 J.W.

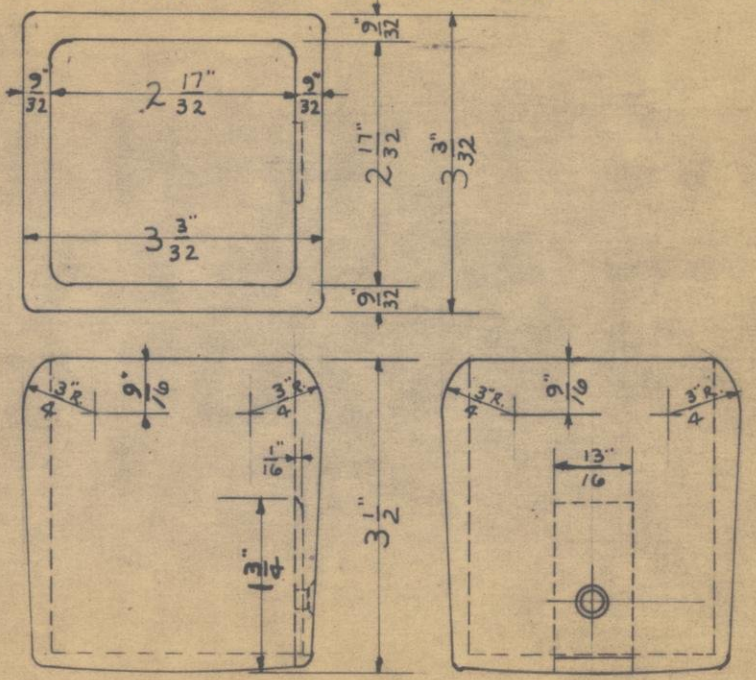

SEE B. P. NO. L-061-XB

PATTERN NO. 1749

POST NO. 120—500—7-15-53

HAMILTON MFG. CO.

DO NOT REMOVE THIS LEAF FROM BOOK

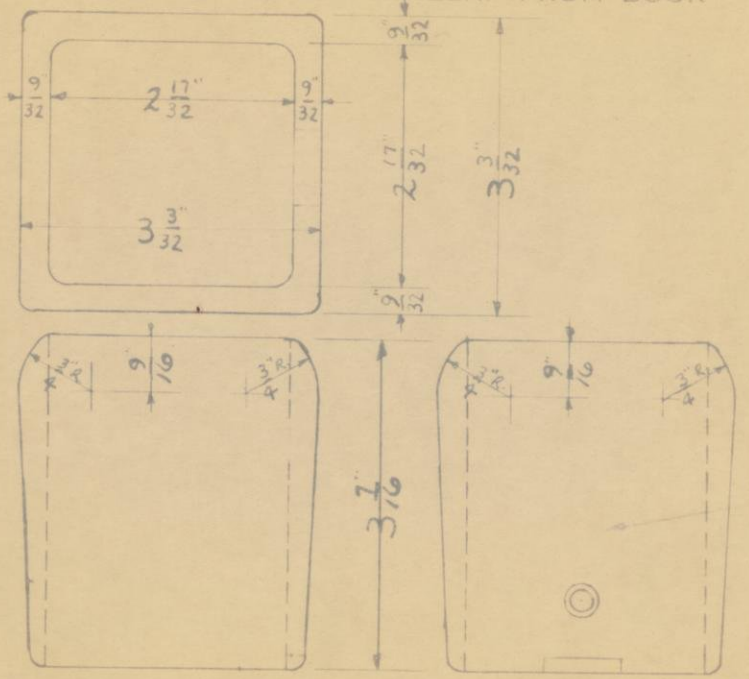

SEE B. P. NO. L-061-XC

PATTERN NO. 1750

THIS PRINT ISSUED TO FACTORY
DATE SEP 28 1962
ANY COPY, PREVIOUSLY ISSUED & WITHOUT THIS STAMP, IS OBSOLETE.
HAMILTON MFG. CO.
ENGINEERING DEPT.
DATE 7-15-55

HAMILTON MFG. CO.

DO NOT REMOVE THIS LEAF FROM BOOK

DATE- 7-15-55 J.W.

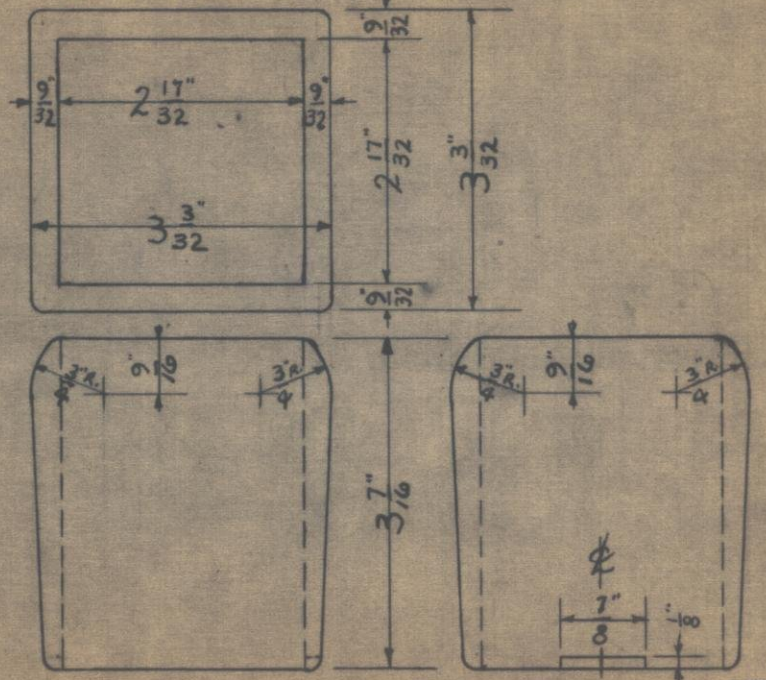

SEE B. P. NO. L-061-XD

PATTERN NO. 1751

HAMILTON MFG. CO.

DO NOT REMOVE THIS LEAF FROM BOOK

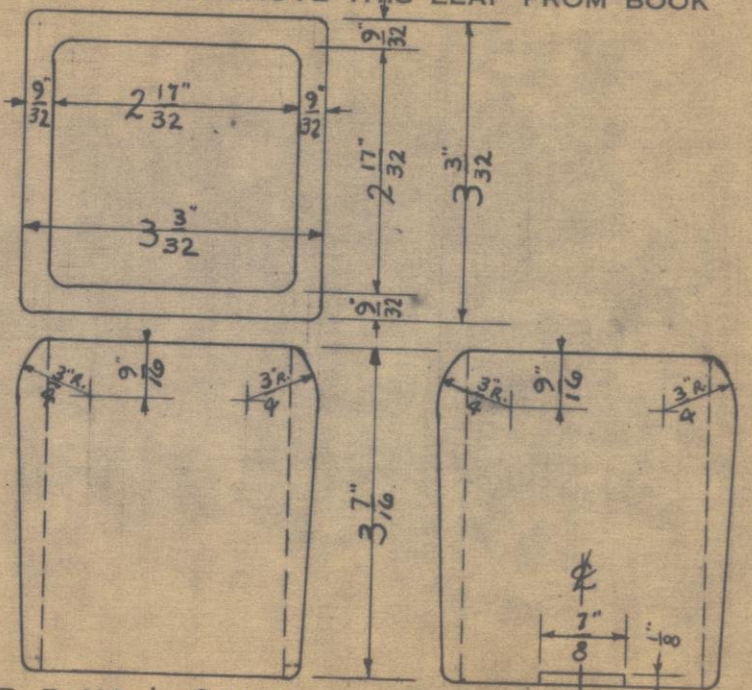

DATE- 7-15-55 J.W.

SEE B. P. NO. L-061-XD

PATTERN NO. 1751

3-012

THIS PRINT ISSUED TO FACTORY
DATE JUN 23 1964
ANY COPY, PREVIOUSLY ISSUED &
WITHOUT THIS STAMP, IS OBSOLETE.
HAMILTON MFG. CO.
ENGINEERING DEPT.

HAMILTON MANUFACTURING COMPANY
DO NOT REMOVE THIS LEAF FROM BOOK

DATE 6-17-64 W. LUEBKE

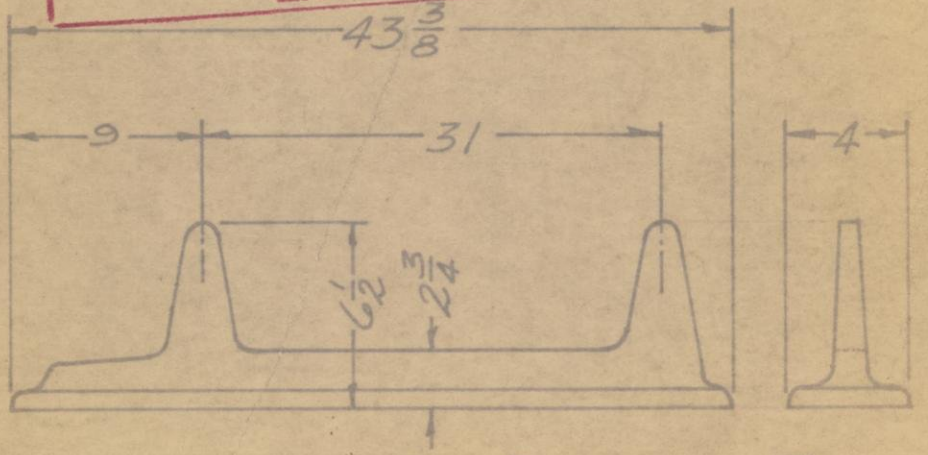

CAST IRON FOOT FOR POWER EXAM. TABLE

☐ MOULDING NO.

SEE B. P. NO. D-0041043-7

☐ PATTERN NO. 1765

HAMILTON MFG. CO.

DO NOT REMOVE THIS LEAF FROM BOOK

DATE- 12-8-55

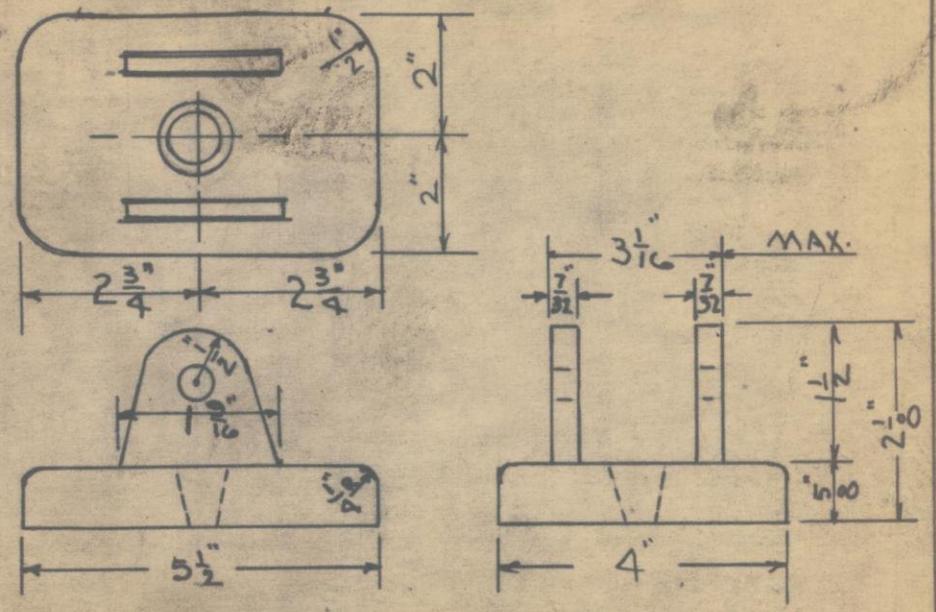

BOOKSTACK BASE PLATE

SEE B. P. NO. R-0035413-A PATTERN NO. 1752

3-004

HAMILTON MFG. CO.

DO NOT REMOVE THIS LEAF FROM BOOK

DATE- 12-16-55 A-J-G

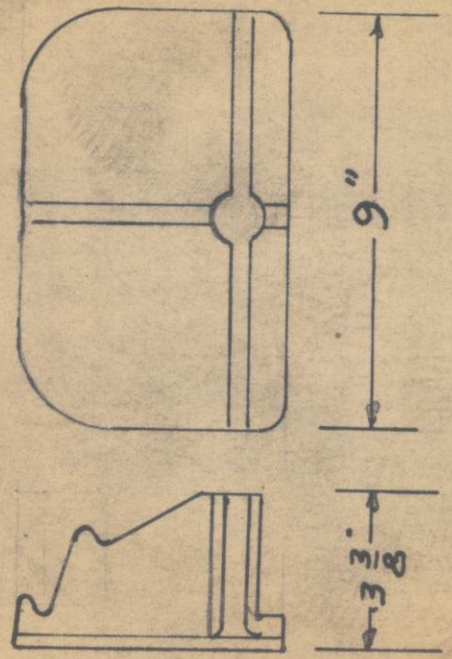



SEE B. P. NO. R-0035622

PATTERN NO. #1753

POST NO. 120—500—7-15-53

JUN 1 1

2-004

HAMILTON MFG. CO.

DO NOT REMOVE THIS LEAF FROM BOOK

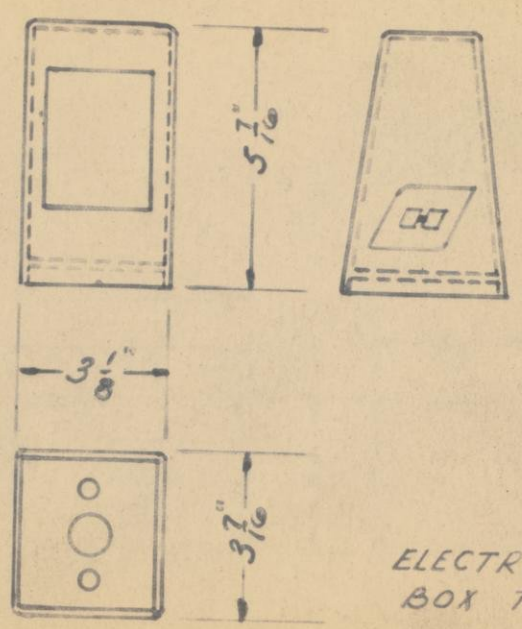

DATE- 5-8-56 JEP

ELECTRIC PEDESTAL
BOX TYPE EN

SEE B. P. NO. 0035480

PATTERN NO. 1754

PUSI NO. 120 - 500 7-15-53

3-004

HAMILTON MFG. CO.

DO NOT REMOVE THIS LEAF FROM BOOK

DATE- 5-6-56 JEP

RACK TYPE ELECTRIC
BOX TYPE CN

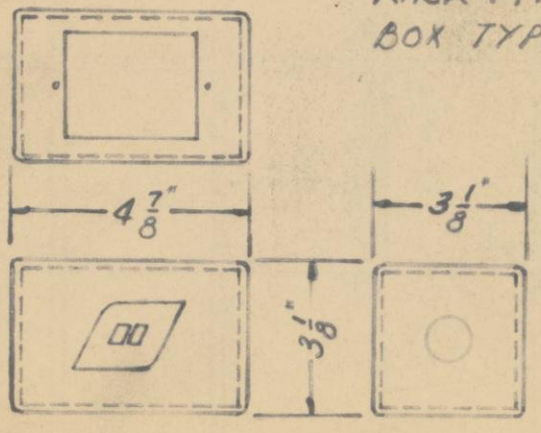

SEE B. P. NO. 0035481

PATTERN NO. 1755

PUSI NO. 120 500 7-15-53

3-004

HAMILTON MFG. CO.

DO NOT REMOVE THIS LEAF FROM BOOK

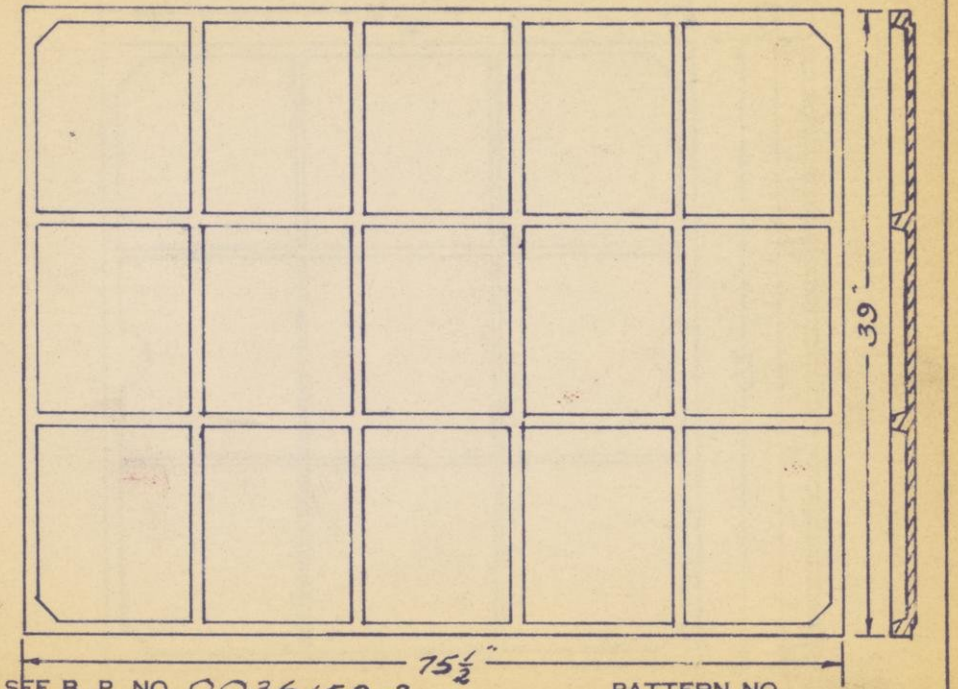

341

DATE- JAN 2 1957

SEE B. P. NO. 0036159-2

PATTERN NO. 1756

PUSI NO. 120 500 7-15-53

3-004

HAMILTON MFG. CO.

DO NOT REMOVE THIS LEAF FROM BOOK

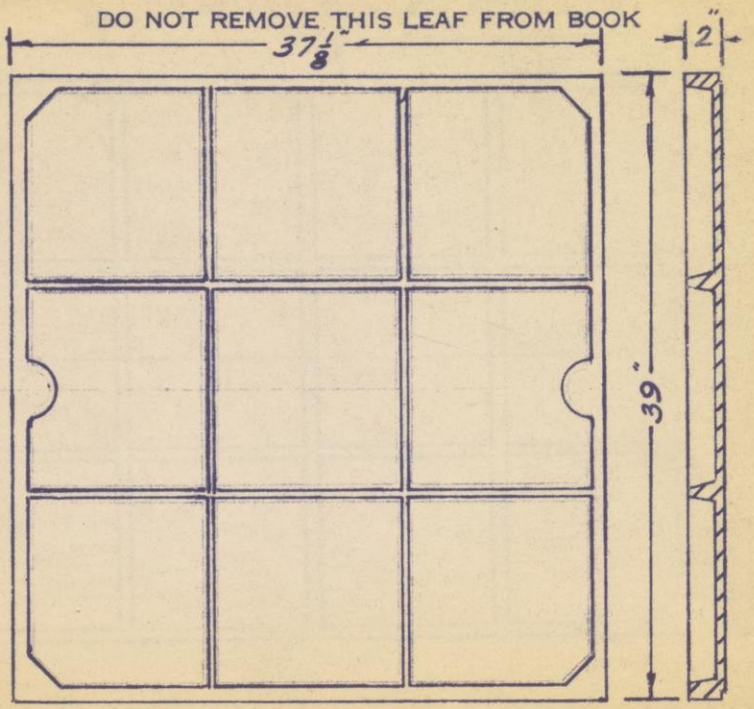

DATE-

SEE B. P. NO. 0036277

PATTERN NO. 1757

JAN 2 1957

POST NO. 120—500—7-15-53

3-004

HAMILTON MFG. CO.

DO NOT REMOVE THIS LEAF FROM BOOK

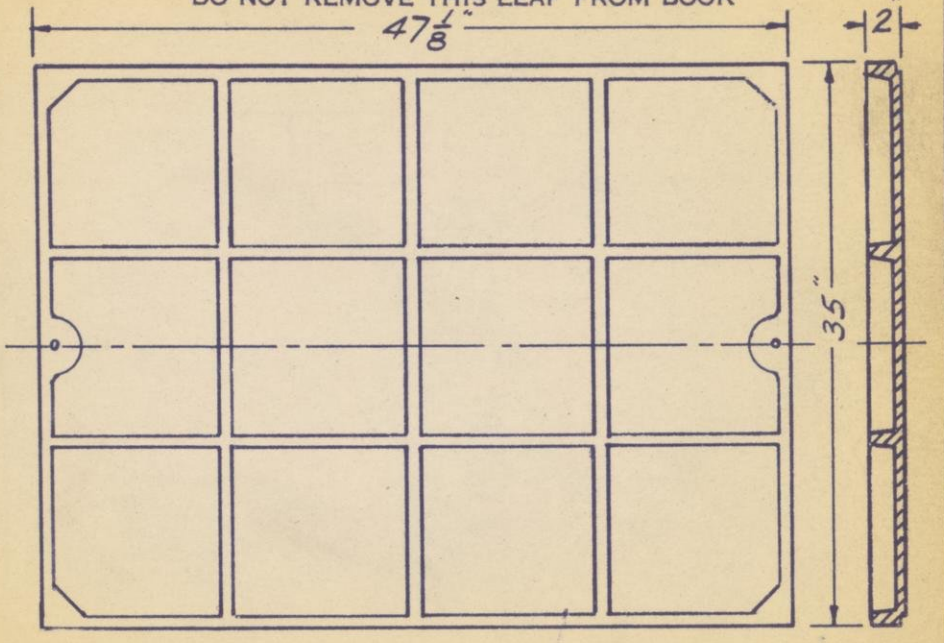

3411

DATE-

SEE B. P. NO. 0036277-1 PATTERN NO. 1758

JAN 2 1957

JUN 11 1960

3-004

HAMILTON MFG. CO.

DO NOT REMOVE THIS LEAF FROM BOOK

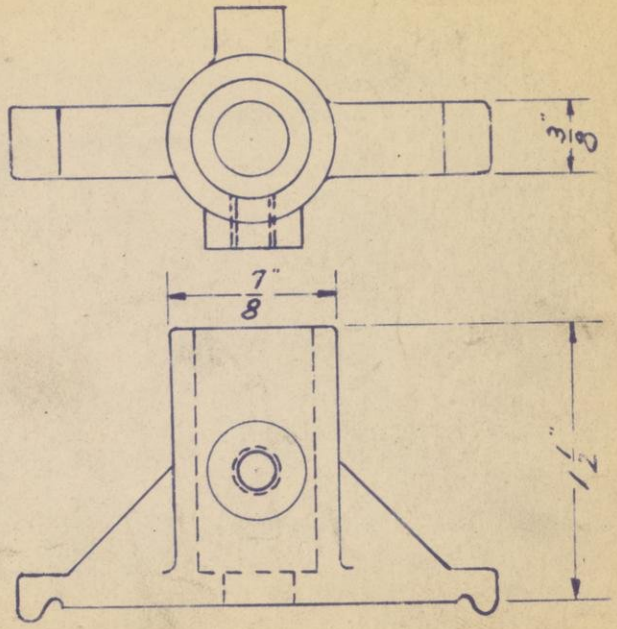

DATE- 4-9-57 K.L.P.

SEE B. P. NO.

PATTERN NO. 1759

PUSI NO. 120 500 7-15-53

JUN 11 1958

3-004

HAMILTON MFG. CO.

DO NOT REMOVE THIS LEAF FROM BOOK

DATE- 9/16/58 E.B.

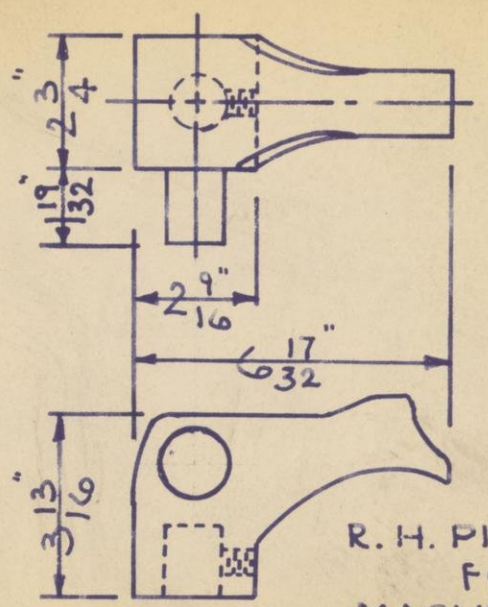

R. H. PIVOT SEAT
FOR
MASHEK TRUCK

SEE B. P. NO. 2601-7

PATTERN NO. 1760

USS NO. 120-500 7-15-53

JUN 11 1959

HAMILTON MFG. CO.

DO NOT REMOVE THIS LEAF FROM BOOK

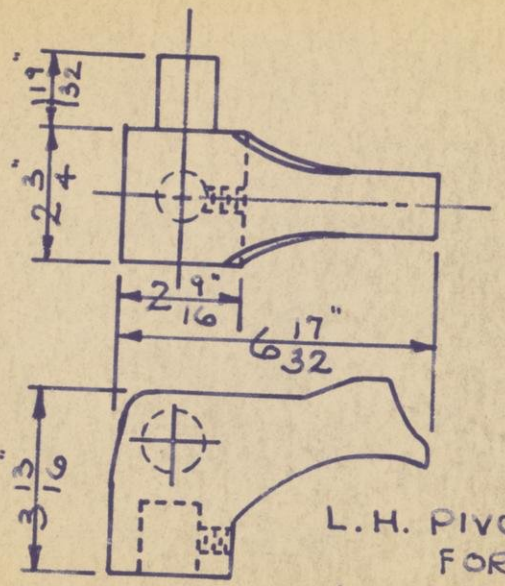

L.H. PIVOT SEAT
FOR
MASHEK TRUCK

SEE B. P. NO. 2601-7

PATTERN NO. 1761

PUSI NO. 120 500 7/53

JUN 1 1 1960

HAMILTON MANUFACTURING COMPANY

DO NOT REMOVE THIS LEAF FROM BOOK

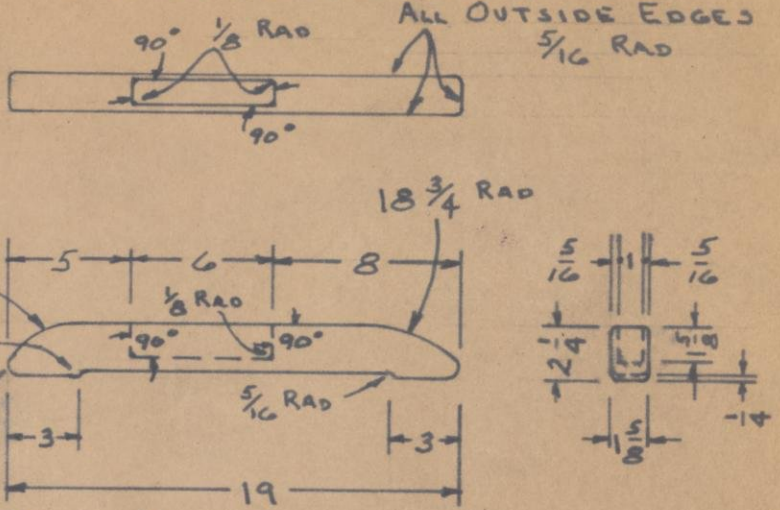

CAST ALUM SHOE

SAND CAST FIN & GRIND SMOOTH

DATE- 6-9-65

☐ MOULDING NO.

☑ PATTERN NO. 1766

E.B.P. NO. 2-5

ORDER NO RL-270238

JUN 11 1965

12

HAMILTON MANUFACTURING COMPANY

DO NOT REMOVE THIS LEAF FROM BOOK

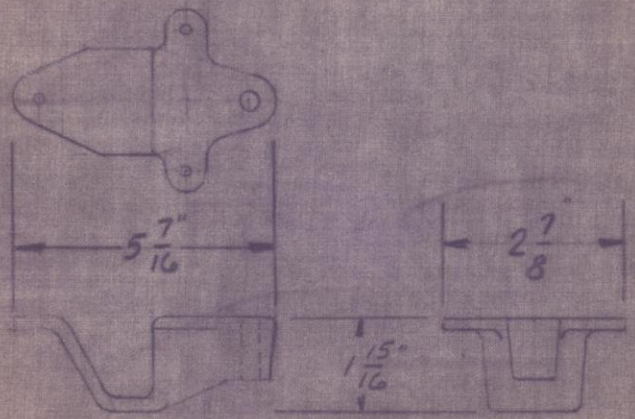

DATE -

SEE B. P. NO. B-12754

☐ MOULDING NO.

☐ PATTERN NO. 1769

373

HAMILTON MFG. CO.

DO NOT REMOVE THIS LEAF FROM BOOK

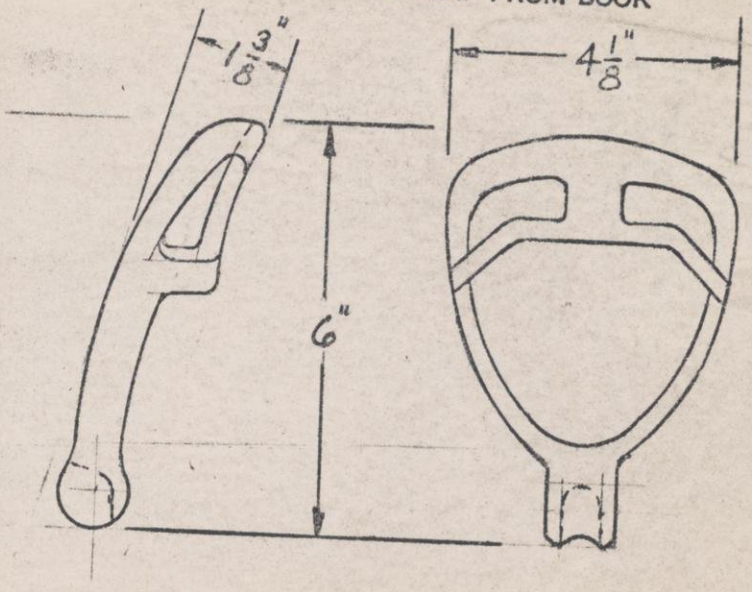

DATE- 3-31-72 PRINT TO FACTORY

B. P. NO. C-154770 PATTERN NO. 1770

POST NO. 120—500 15-53

Standard
B&P
Blank Books