LIBRARIES
UNIVERSITY OF WISCONSIN–MADISON

[Hamilton Manufacturing Company patterns destroyed, 4/3/52]. 1952

Two Rivers, Wisconsin: J.E. Hamilton Holly Wood Type Company, 1952

https://digital.library.wisc.edu/1711.dl/7M5XU6NIJJPRY8E

Based on date of publication, this material is presumed to be in the public domain.

For information on re-use see:
http://digital.library.wisc.edu/1711.dl/Copyright

The libraries provide public access to a wide range of material, including online exhibits, digitized collections, archival finding aids, our catalog, online articles, and a growing range of materials in many media.

When possible, we provide rights information in catalog records, finding aids, and other metadata that accompanies collections or items. However, it is always the user's obligation to evaluate copyright and rights issues in light of their own use.

728 State Street | Madison, Wisconsin 53706 | library.wisc.edu

PATTERN'S

2

DESTROYED

4/3/52

HAMILTON MFG. CO.

DO NOT REMOVE THIS LEAF FROM BOOK

OBSOLETE 7-8-53

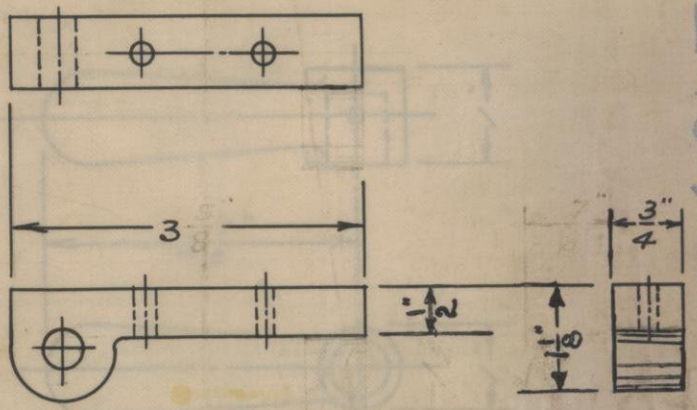

DATE- 11-26-51

PALL PIVOT FOR MASHEK TRUCK

SEE B. P. NO. 2617C01-B PATTERN NO. 1722

PAT. Nº WAS 1694 R & L 11-3-52.
" " " 1722 L - 1723 - R - 12-9-52

HAMILTON MFG. CO.

DO NOT REMOVE THIS LEAF FROM BOOK

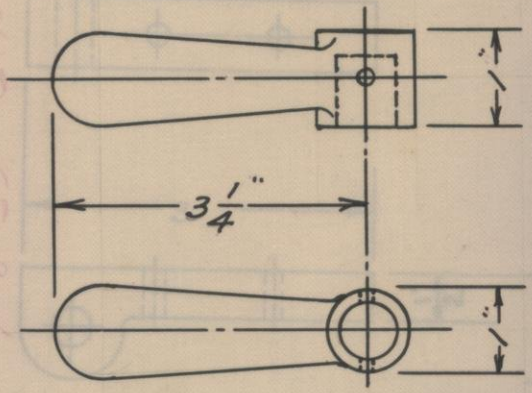

DATE- 11-26-51

HANDLE FOR PALL

obsolete

SEE B. P. NO. 2617C01-B PATTERN NO. 1696

HAMILTON MFG. CO.

DO NOT REMOVE THIS LEAF FROM BOOK

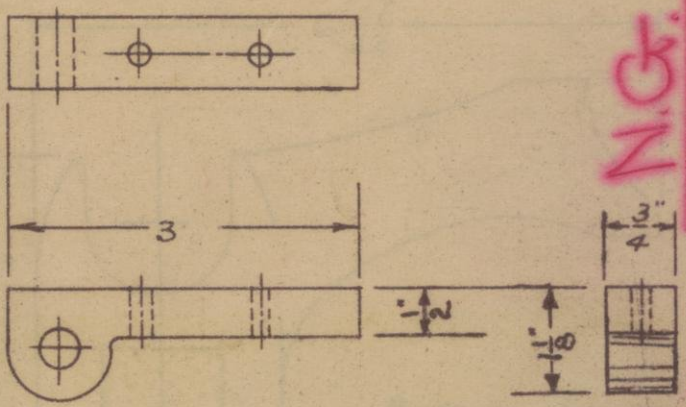

N.G. New number #1722-L.H. #1723-R.H.

DATE- 11-26-51

PALL PIVOT FOR MASHEK TRUCK

SEE B. P. NO. 2617C01-B PATTERN NO. 1694-L R

HAMILTON MFG. CO.

DO NOT REMOVE THIS LEAF FROM BOOK

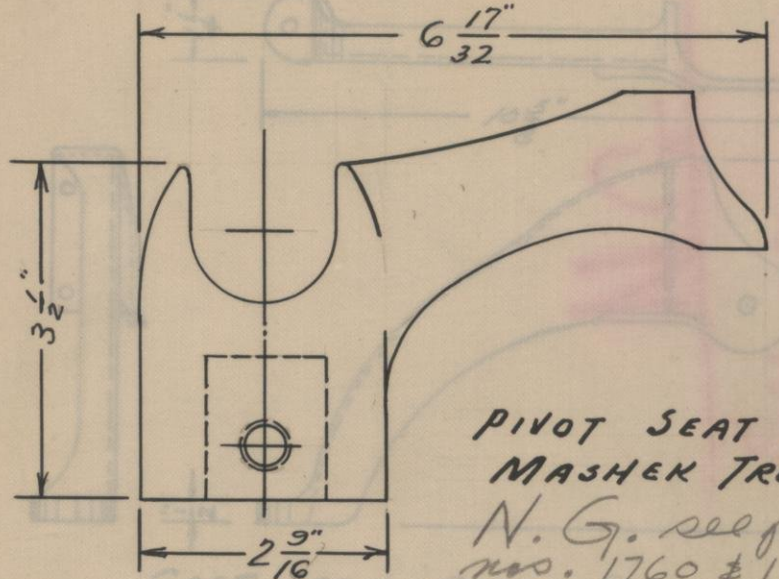

DATE- 11-26-51

PIVOT SEAT FOR MASHER TRUCK

N. G. see pattern nos. 1760 & 1761 per chg. request 3616

SEE B. P. NO. 2617C01-B PATTERN NO. 1692

HAMILTON MFG. CO.

DO NOT REMOVE THIS LEAF FROM BOOK

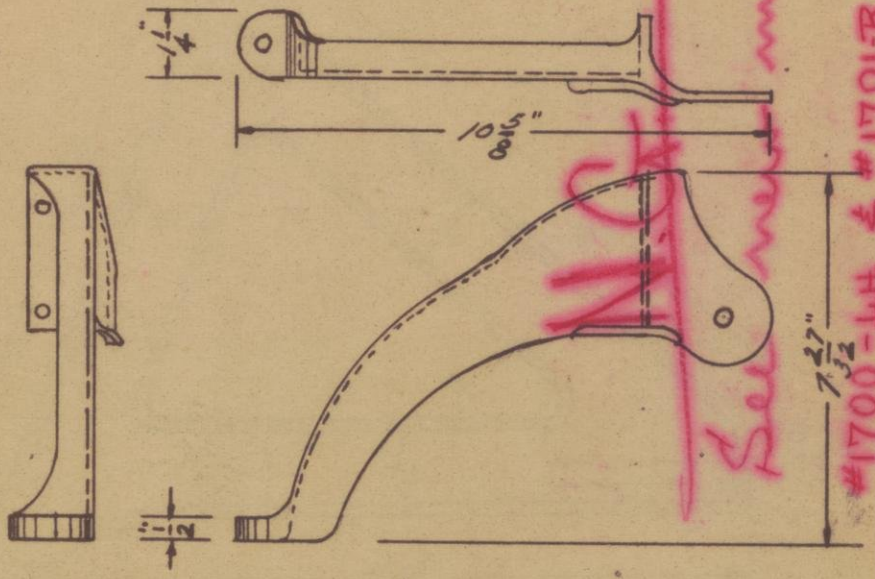

DATE 1-31-52 R.O.G

#1700-L.H. & #1701-R.H.

CAST IRON FOOT BRACKET

MATERIAL - CAST IRON MAKE R & L

SEE B. P. NO. 1731-3 PATTERN NO. 1689 FOR L FOR R

HAMILTON MFG. CO.

DO NOT REMOVE THIS LEAF FROM BOOK

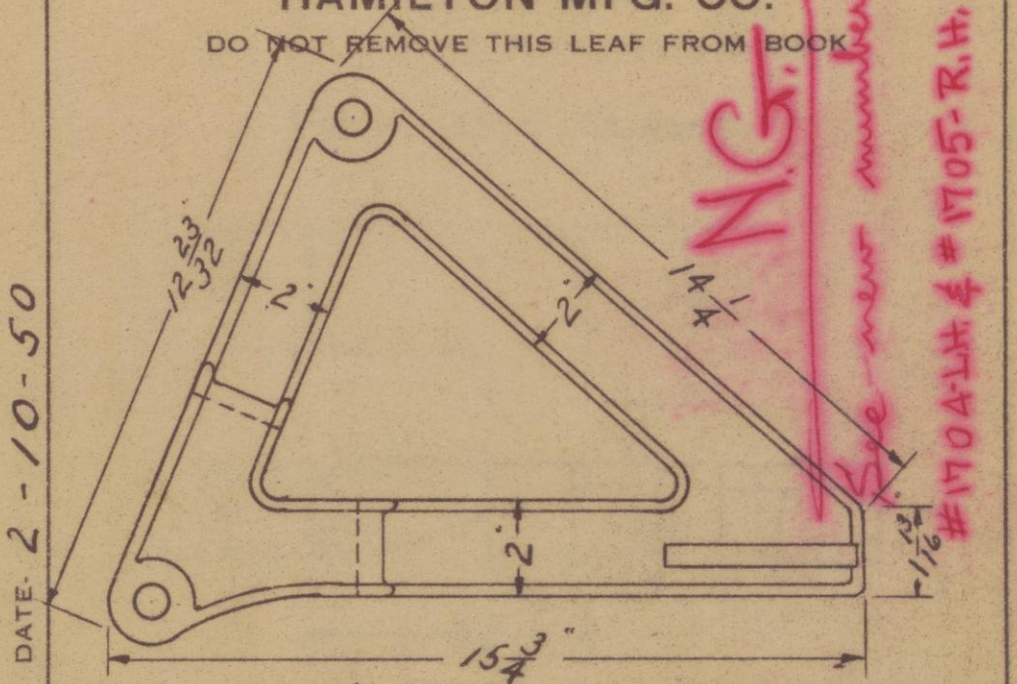

DATE 2-10-50

N.G. See new numbers #1704-LH & #1705-R.H.

FORK FOR No. 13491 DUMPING TRUCK

SEE B. P. NO. 13491-B PATTERN NO 1677 L. R.

HAMILTON MFG. CO.

DO NOT REMOVE THIS LEAF FROM BOOK

TRIP ROD CLAMP.

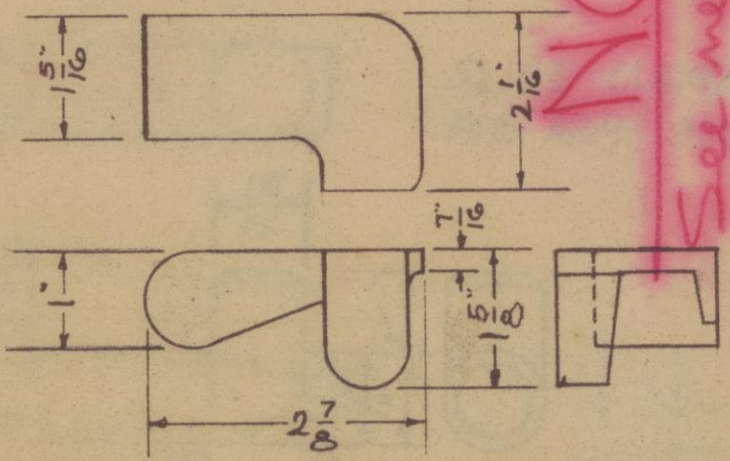

NG

See new numbers #1702-LH & #1703-RH

DATE 4-7-47

RIGHT & LEFT REQ'D. MATERIAL - CAST STEEL

SEE B. P. NO. 9905 AP-H. PATTERN NO 1639-L.R

HAMILTON MFG. CO.

DO NOT REMOVE THIS LEAF FROM BOOK

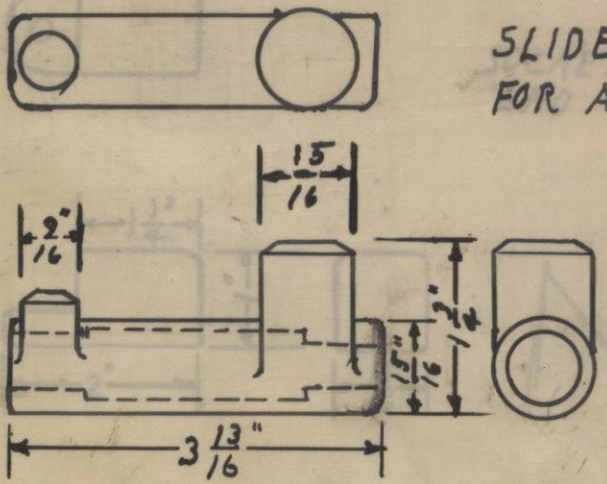

SLIDE CLAMP
FOR ARM REST

N.G.

DATE- 2-22-47

SEE B. P. NO. 9905AP-N

PATTERN NO. 1633

HAMILTON MFG. CO.

DO NOT REMOVE THIS LEAF FROM BOOK

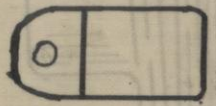

SOCKET FOR FOOT END OF SLIDE BAR

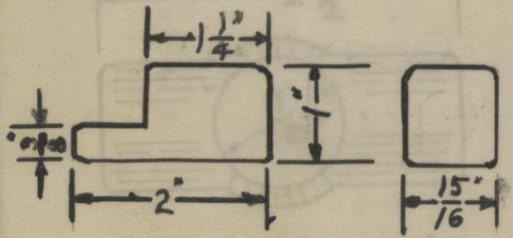

N. G.

DATE- 2-22-47 RFG

SEE B. P. NO. 9905AP-N PATTERN NO. 1635

HAMILTON MFG. CO.

DO NOT REMOVE THIS LEAF FROM BOOK

DATE 4-1-46

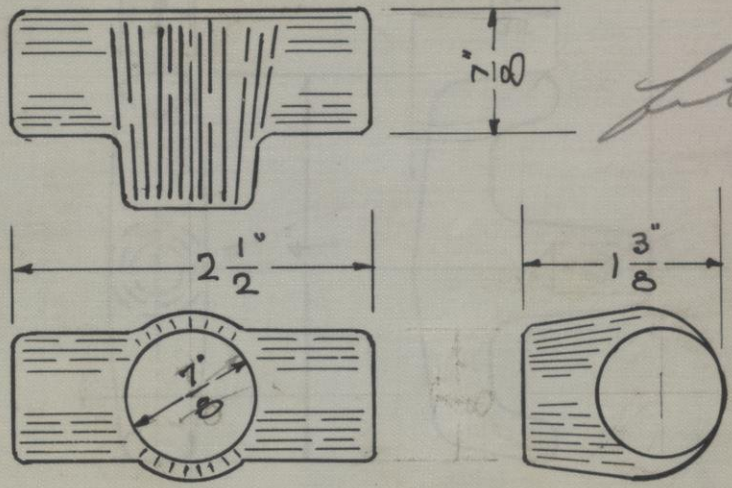

fitting

CAST IRON.

N.G.

SEE B. P. NO. 9905 AP-H

PATTERN NO. 1627

HAMILTON MFG. CO.

DO NOT REMOVE THIS LEAF FROM BOOK

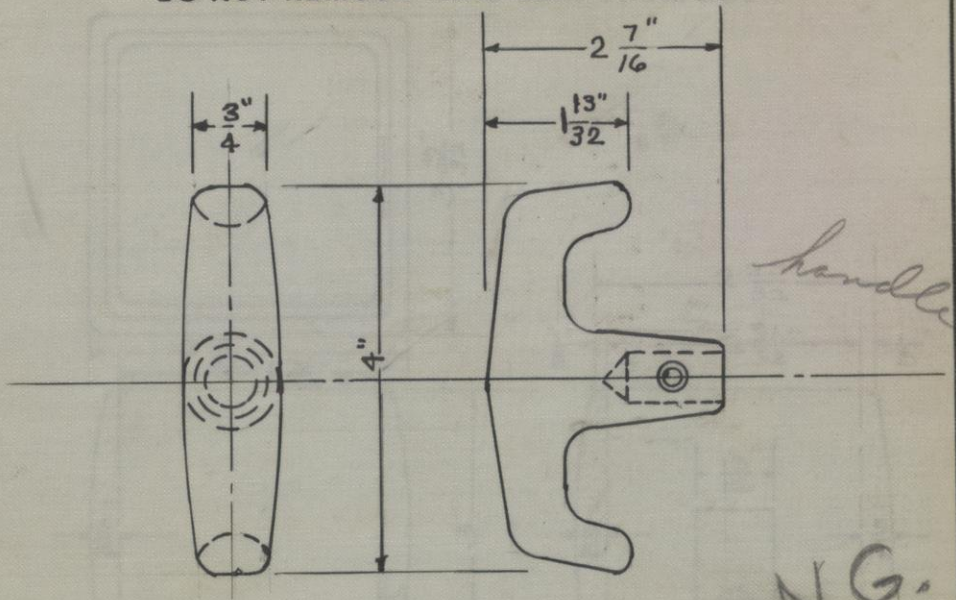

DATE-4-1-46

CAST IRON

N.G.

SEE B. P. NO. 9905AP-L

PATTERN NO. 1626

4

HAMILTON MFG. CO.

DO NOT REMOVE THIS LEAF FROM BOOK

DATE- 3-19-46

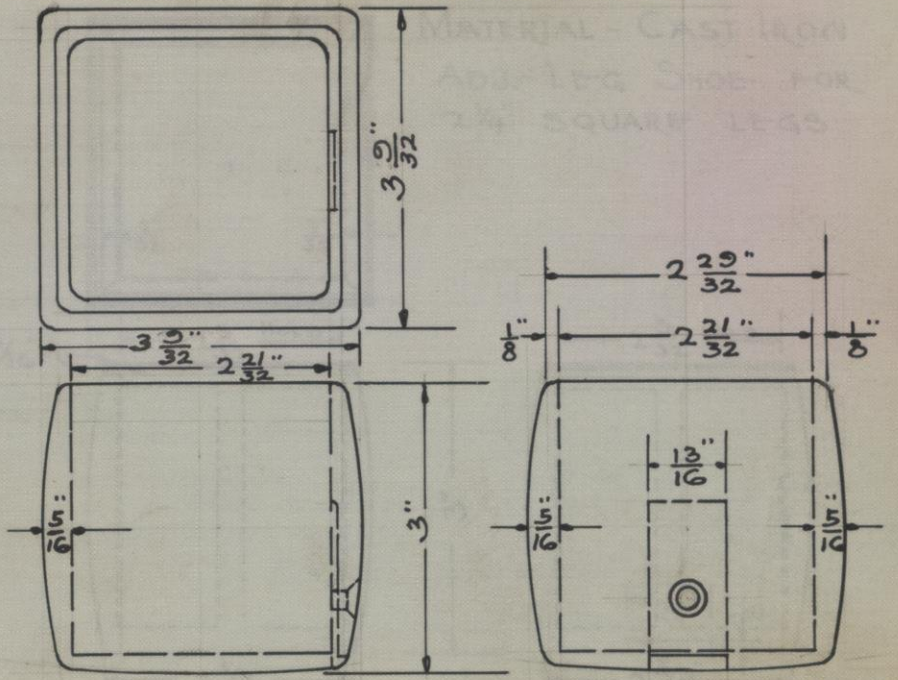

SEE B. P. NO. L-061-X

PATTERN NO. 1625

Use New Pattern same Number

N. G. 2-22-47-a.d.

HAMILTON MFG. CO.

DO NOT REMOVE THIS LEAF FROM BOOK

MATERIAL - CAST IRON

ADJ. LEG SHOE FOR 2¼" SQUARE LEGS

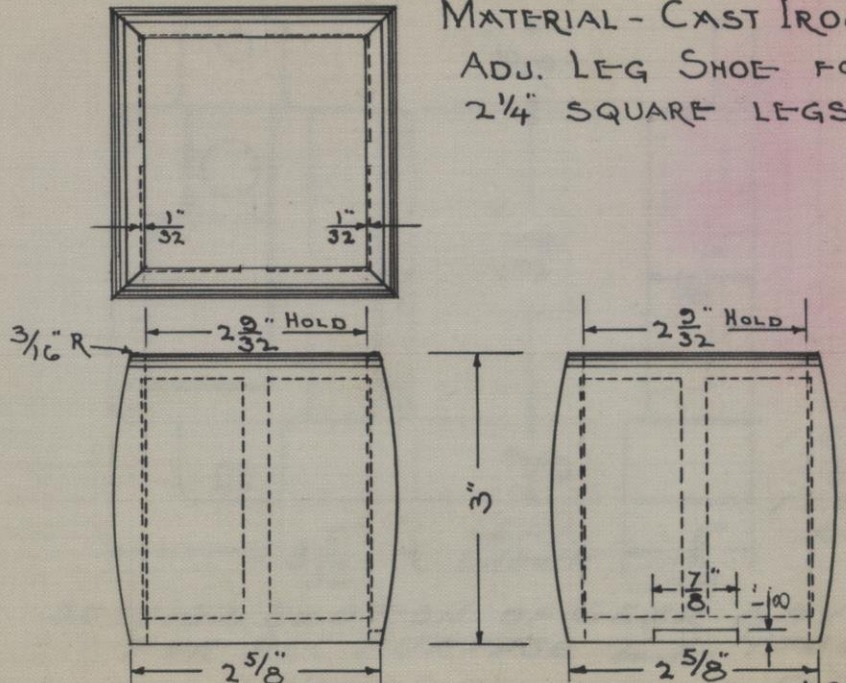

DATE- 11-27-45

SEE B. P. NO. LS-2002-A

PATTERN NO. 1622

N. G. 2-22-47 A. J.

Use New Pattern Same Number

HAMILTON MFG. CO.

DO NOT REMOVE THIS LEAF FROM BOOK

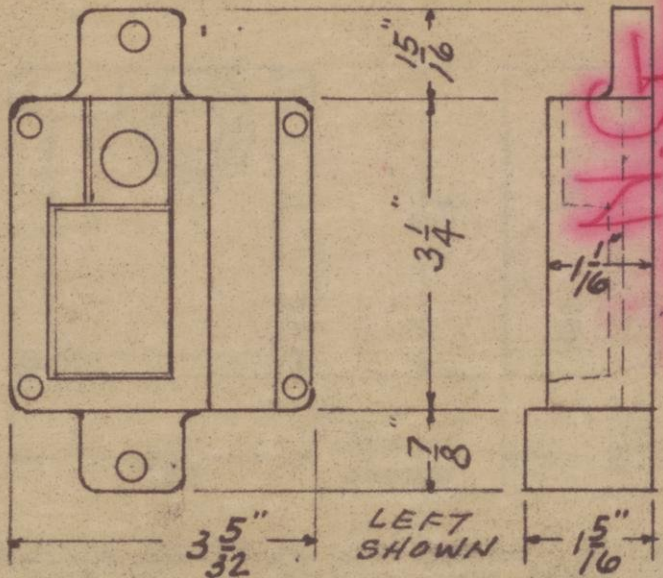

1 RIGHT & 1 LEFT REQ'D.

N.G.

See new number

1720-L.H

1721-R.H.

DATE-

OUTSIDE SECTION OF GEAR BOX FOR ALL PURPOSE EX. TABLE

SEE B. P. NO. 9820 AP-D PATTERN NO 1605-R. L.

HAMILTON MFG. CO.

DO NOT REMOVE THIS LEAF FROM BOOK

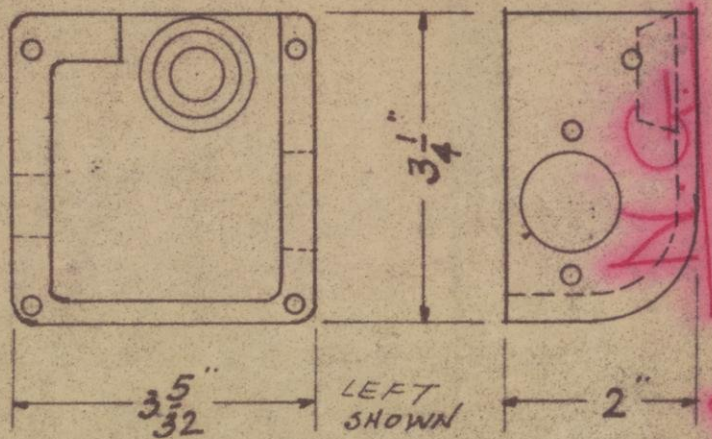

NC

New numbers are #1718-L.H. & 1719-R.H.

DATE-

INSIDE SECTION OF GEAR BOX
FOR ALL PURPOSE EX. TABLES
1 RIGHT & 1 LEFT REQ'D.

SEE B. P. NO. 9820 A P-D

PATTERN NO. 1604-R L

HAMILTON MFG. CO.

DO NOT REMOVE THIS LEAF FROM BOOK

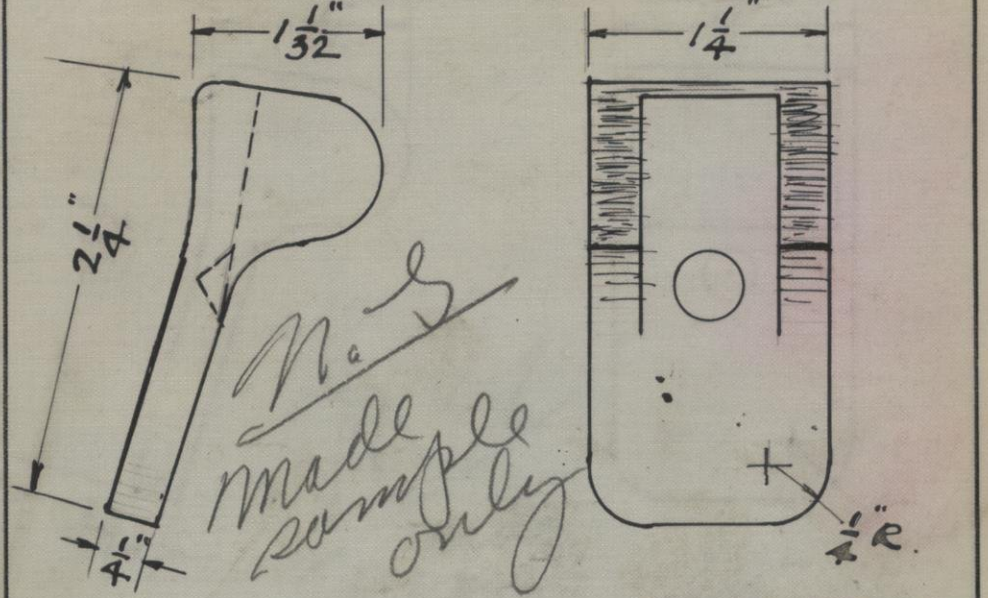

DATE-

CLAMP FOR ALL PURPOSE TABLE

MATERIAL - CAST STEEL

SEE B. P. NO.

PATTERN NO. 1603

HAMILTON MFG. CO.

DO NOT REMOVE THIS LEAF FROM BOOK

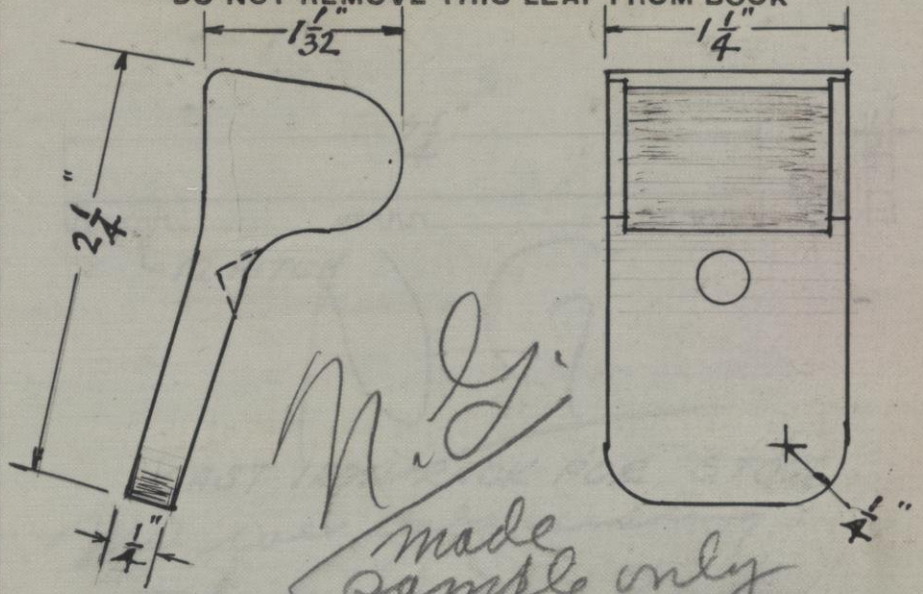

DATE-

N. G.

made sample only

CLAMP FOR ALL PURPOSE TABLE

MATERIAL- CAST STEEL

SEE B. P. NO.

PATTERN NO. 1602

HAMILTON MFG. CO.

DO NOT REMOVE THIS LEAF FROM BOOK

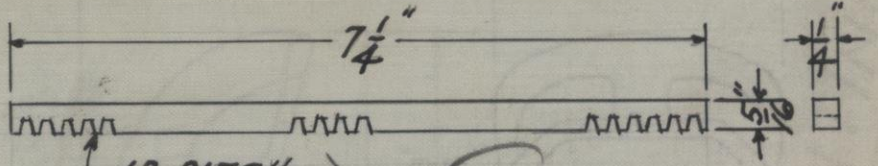

NG

CAST IRON RACK FOR STOOL

Will we are using steel machined Rack

5-16-45

DATE-

SEE B. P. NO. 423-X PATTERN NO. 1574

11

HAMILTON MFG. CO.

DO NOT REMOVE THIS LEAF FROM BOOK

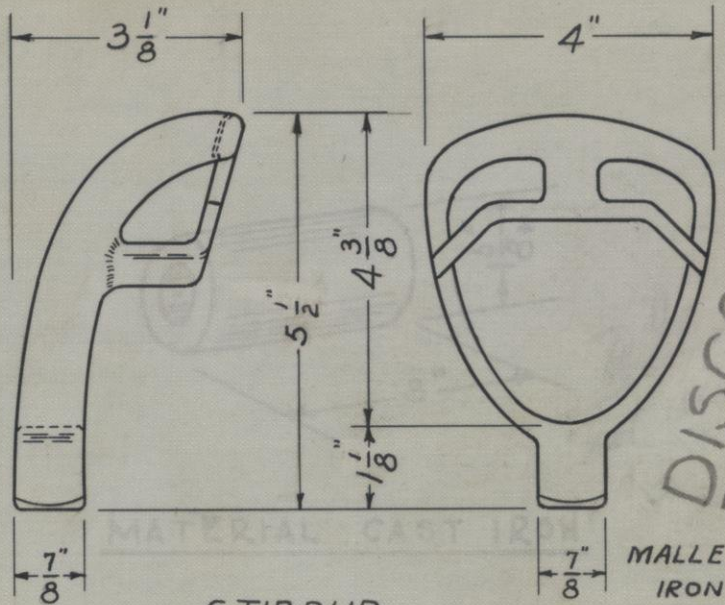

MALLEABLE IRON

STIRRUP

SEE B. P. NO. 9462-X5 PATTERN NO. 1566

DATE- 10-16-41 P.F.J.

DISCONTINUED 10-14-46 P.F.J.

N N

HAMILTON MFG. CO.

DO NOT REMOVE THIS LEAF FROM BOOK

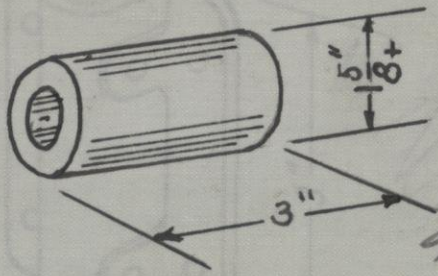

NG
not used

MATERIAL CAST IRON

DATE- GEB 2-3-41

SEE B. P. NO. 9505-A-F-W PATTERN NO. 1551

HAMILTON MFG. CO.

DO NOT REMOVE THIS LEAF FROM BOOK

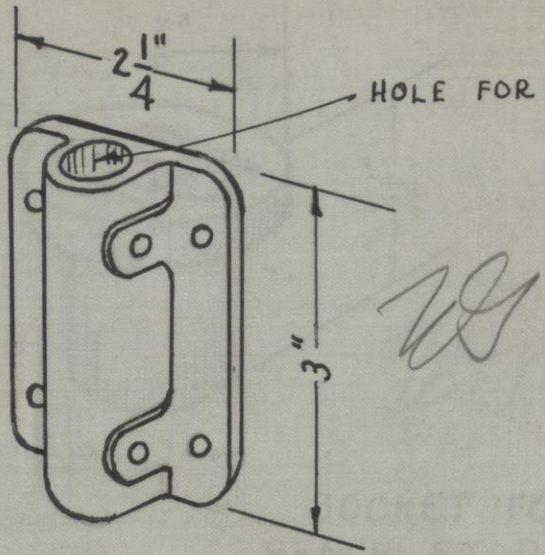

SOCKET CAST IRON

SEE B. P. NO. 33689-A PATTERN NO. 1530

DATE-4-30-40 WEB.

HAMILTON MFG. CO.

DO NOT REMOVE THIS LEAF FROM BOOK

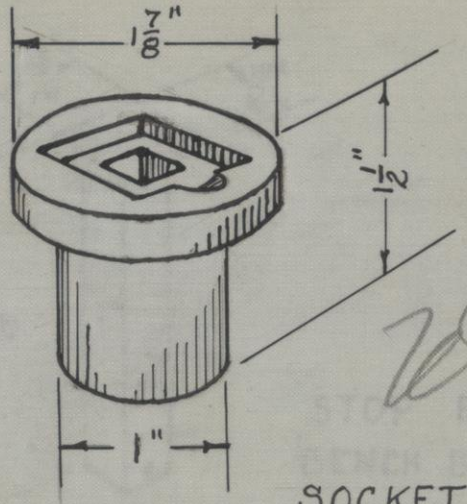

DATE- 8-10-39 GEB

SOCKET FOR
BENCH STOP
CAST IRON

SEE B. P. NO. 577

PATTERN NO. 1519

HAMILTON MFG. CO.

DO NOT REMOVE THIS LEAF FROM BOOK

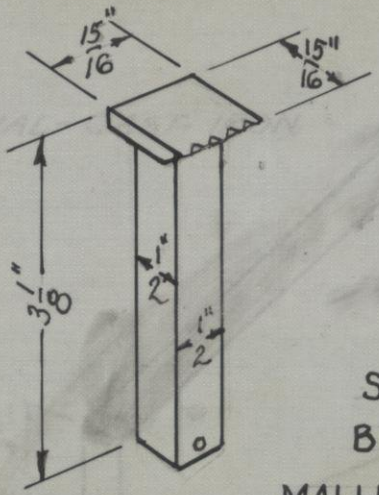

DATE- 8-10-39 LEO

STOP FOR
BENCH SOCKET
MALLEABLE IRON

N.G.

SEE B. P. NO. 577

PATTERN NO. 1518

HAMILTON MFG. CO.

DO NOT REMOVE THIS LEAF FROM BOOK

DATE- 11-29-38 P.F.J.

MATERIAL - CAST IRON

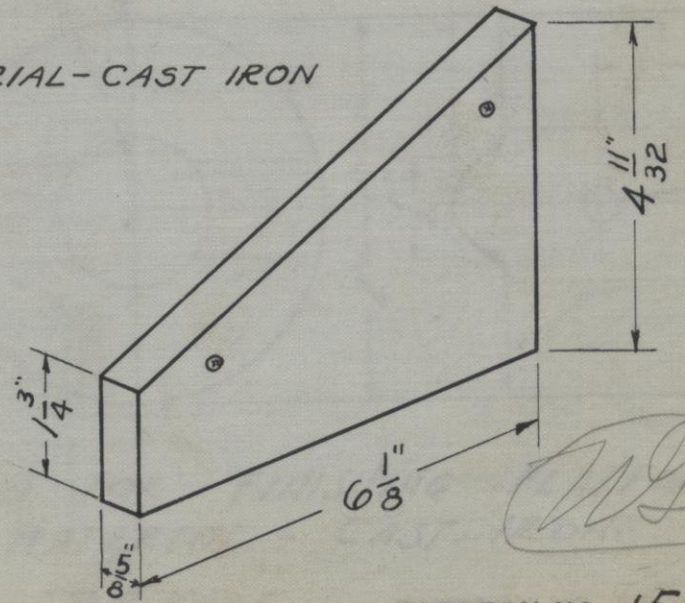

SEE B. P. NO. 149-XC

PATTERN NO. 1506

HAMILTON MFG. CO.

DO NOT REMOVE THIS LEAF FROM BOOK

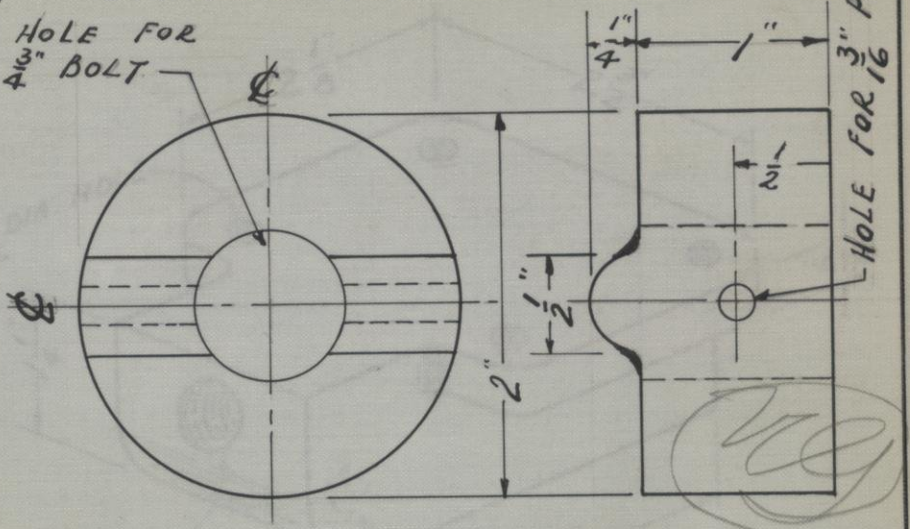

DATE- 9-15-38 - R.A.S.

CAM FOR FINISHING PLATFORM

MATERIAL - CAST IRON.

SEE B. P. NO. 785-F PATTERN NO. 1505

HAMILTON MFG. CO.

DO NOT REMOVE THIS LEAF FROM BOOK

DATE- 8-10-38 P.F.J.

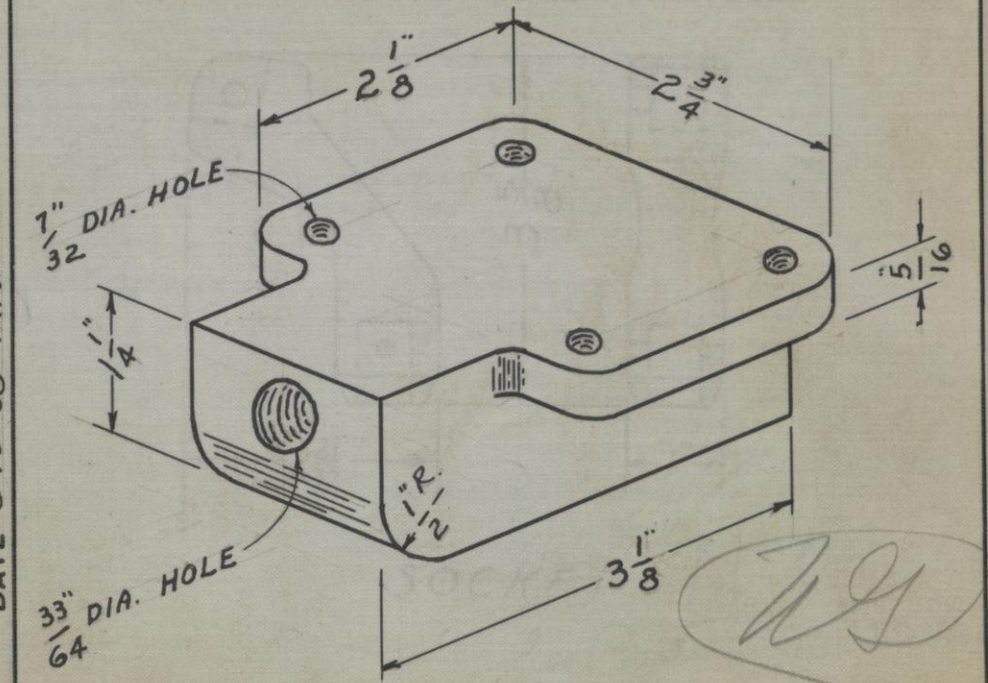

SEE B. P. NO. 9449-XD

PATTERN NO. 1504

HAMILTON MFG. CO.

DO NOT REMOVE THIS LEAF FROM BOOK

DATE- 7/12/38

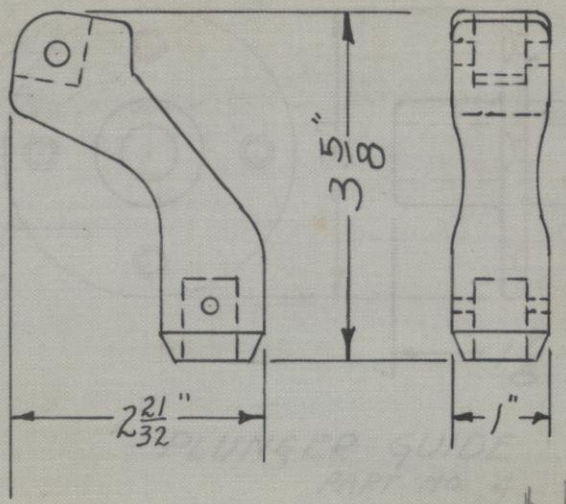

SOCKET N.G.

See Pattern No. 1516

SEE B. P. NO. 9905-XK PATTERN NO. 1499

HAMILTON MFG. CO.

DO NOT REMOVE THIS LEAF FROM BOOK

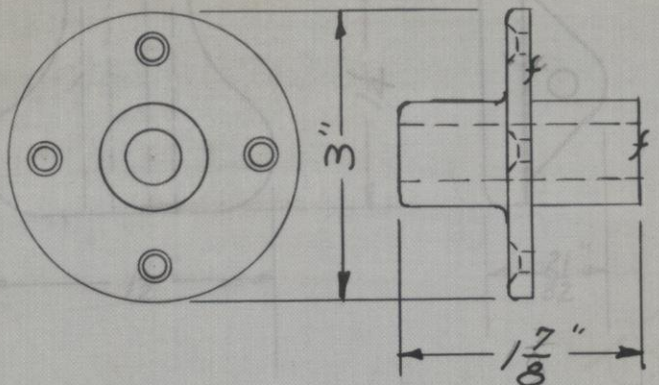

PLUNGER GUIDE

PART NO. 4

Disc

DATE- M.C. 3-22-38

SEE B. P. NO. 146-XD

PATTERN NO. 1485

HAMILTON MFG. CO.

DO NOT REMOVE THIS LEAF FROM BOOK

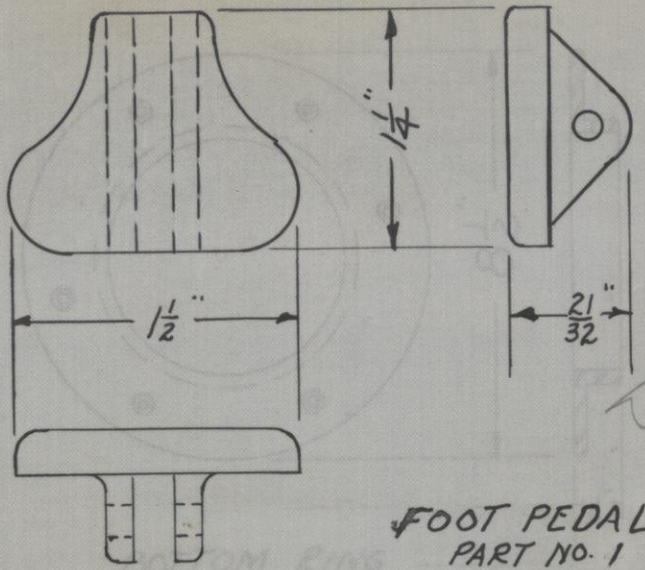

Die

FOOT PEDAL
PART NO. 1

DATE- MC. 3-22-38

SEE B. P. NO. 146-XD

PATTERN NO. 1484

HAMILTON MFG. CO.

DO NOT REMOVE THIS LEAF FROM BOOK

DATE- MC. 3-22-38

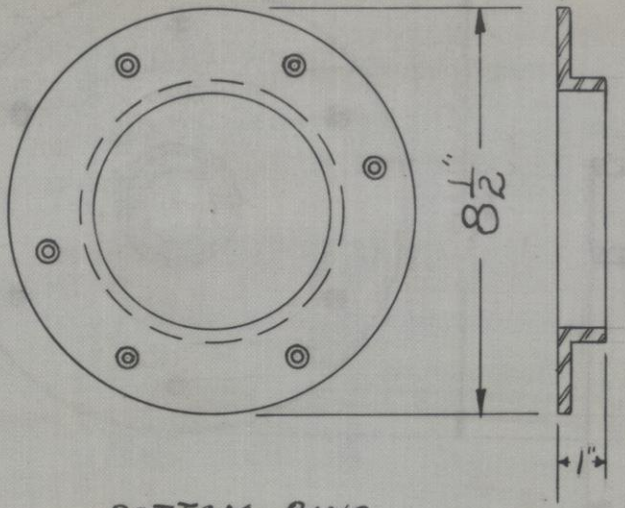

BOTTOM RING
PART NO. 5

Disc

SEE B. P. NO. 146-XB

PATTERN NO. 1483

HAMILTON MFG. CO.

DO NOT REMOVE THIS LEAF FROM BOOK

DATE- MC. 3-22-38

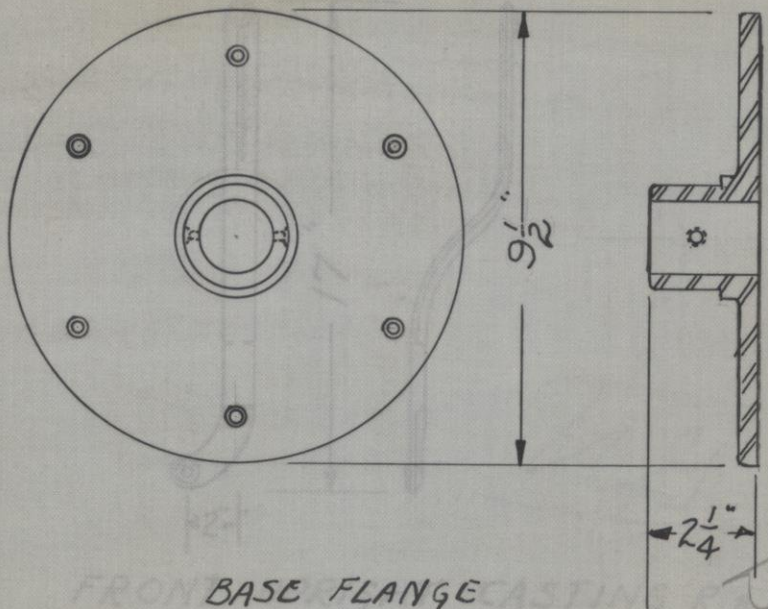

BASE FLANGE
PART NO. 4

SEE B. P. NO. 146-XB PATTERN NO. 1482

HAMILTON MFG. CO.

DO NOT REMOVE THIS LEAF FROM BOOK

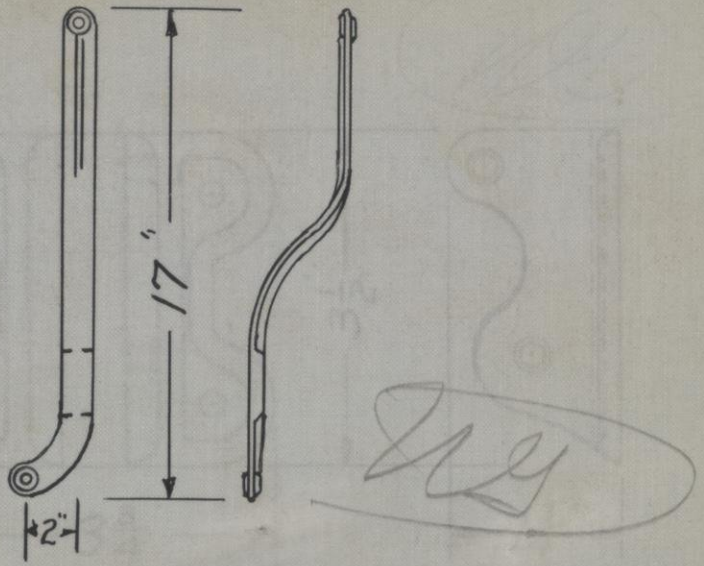

DATE-

FRONT UPRIGHT CASTING R. & L.

SEE B. P. NO. 19068 X-K PATTERN NO. 1477

HAMILTON MFG. CO.

DO NOT REMOVE THIS LEAF FROM BOOK

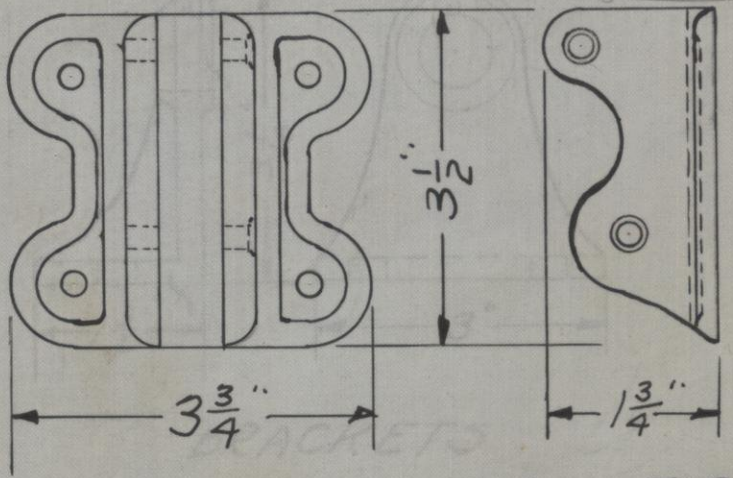

BRACKET FOR TABLE TOP

DATE- 11-19-37

SEE B. P. NO. 9490-X-G PATTERN NO. 1476

HAMILTON MFG. CO.

DO NOT REMOVE THIS LEAF FROM BOOK

DATE- 9-14-37

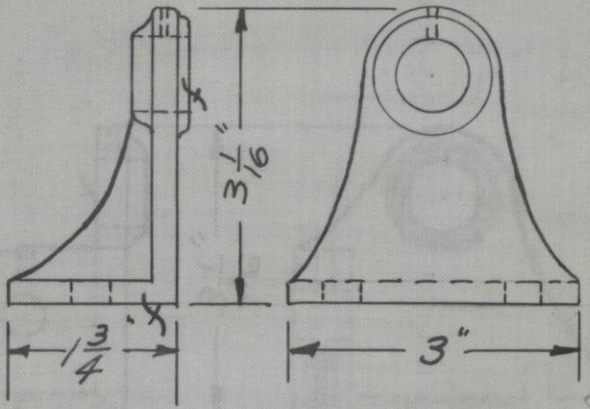

BRACKETS

SEE B. P. NO. 9468-X-12 PATTERN NO. 1467

HAMILTON MFG. CO.

DO NOT REMOVE THIS LEAF FROM BOOK

DATE- 9-1437

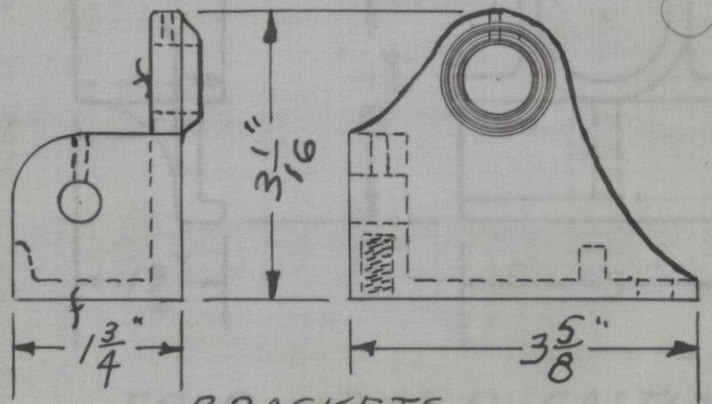

BRACKETS

SEE B. P. NO. 9468-X-12 PATTERN NO. 1466

HAMILTON MFG. CO.

DO NOT REMOVE THIS LEAF FROM BOOK

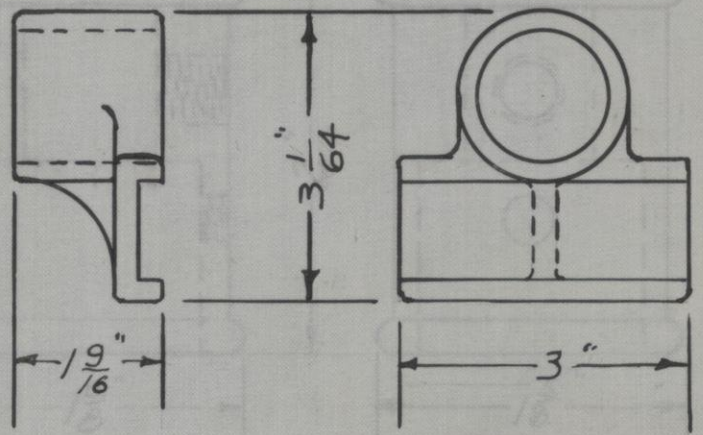

DATE-

TRIP LEVER CASTING

SEE B. P. NO. 1818-X5 PATTERN NO. 1465

HAMILTON MFG. CO.

DO NOT REMOVE THIS LEAF FROM BOOK

DATE- 7/12/38

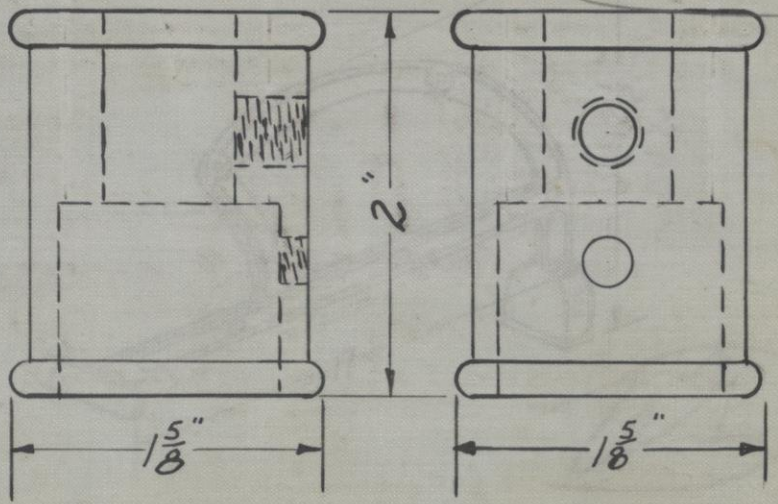

CAP ÷ PART No 1

SEE B. P. NO. ~~0022239-A~~ 002175G PATTERN NO. 1461

HAMILTON MFG. CO.

DO NOT REMOVE THIS LEAF FROM BOOK

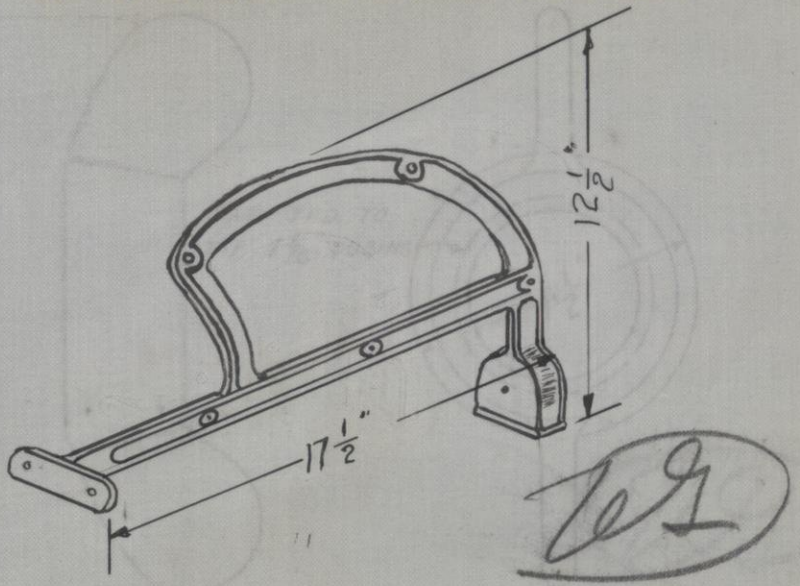

DATE-

CARRIAGE FOR COASTER CHAIR

SEE B. P. NO. 19068 X A PATTERN NO. 1456

HAMILTON MFG. CO.

DO NOT REMOVE THIS LEAF FROM BOOK

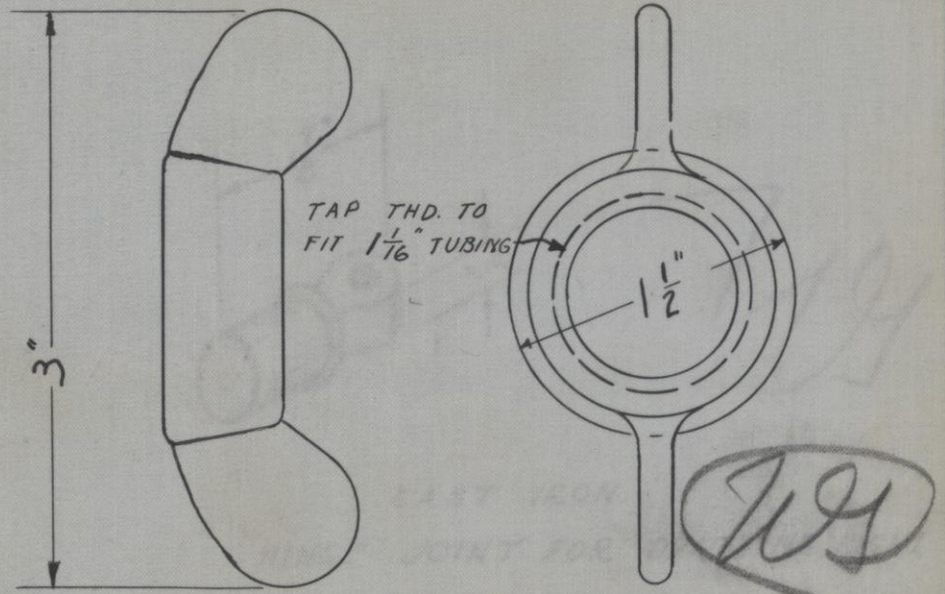

DATE- 8-5-37

WING NUT

SEE B. P. NO. 19068 XH. PATTERN NO. 1455

HAMILTON MFG. CO.

DO NOT REMOVE THIS LEAF FROM BOOK

DATE- WEB. 5-24-37

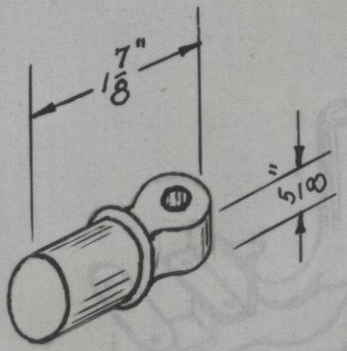

CAST IRON

HINGE JOINT FOR DRAFTING LIGHT

SEE B. P. NO. 1811

PATTERN NO. 1450

DATE- Revised 3-8-40 LEB.

HAMILTON MFG. CO.

DO NOT REMOVE THIS LEAF FROM BOOK

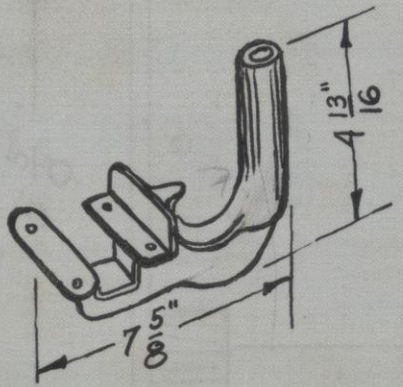

CAST IRON

BRACKET FOR DRAFTING LIGHT

SEE B. P. NO. 1811A-X

PATTERN NO. 1449

HAMILTON MFG. CO.

DO NOT REMOVE THIS LEAF FROM BOOK

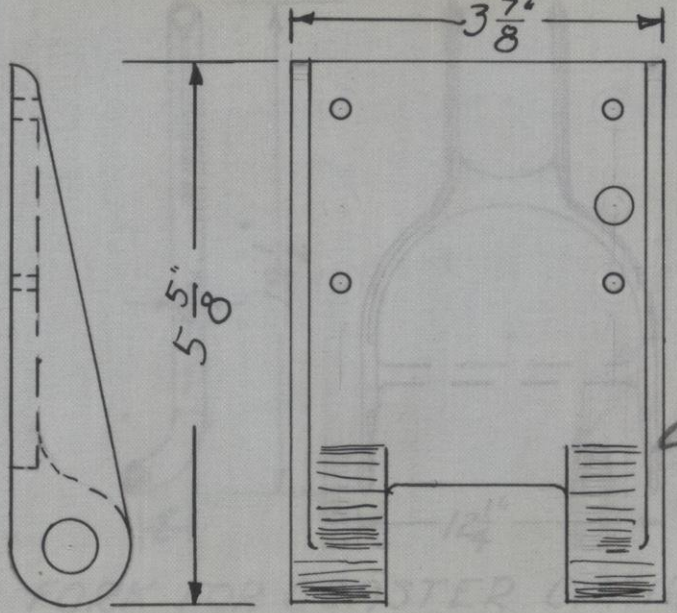

DATE-

BRACKET FOR GLUE POT

SEE B. P. NO. 15052-XA

PATTERN NO. 1448

HAMILTON MFG. CO.

DO NOT REMOVE THIS LEAF FROM BOOK

DATE-5-6-37

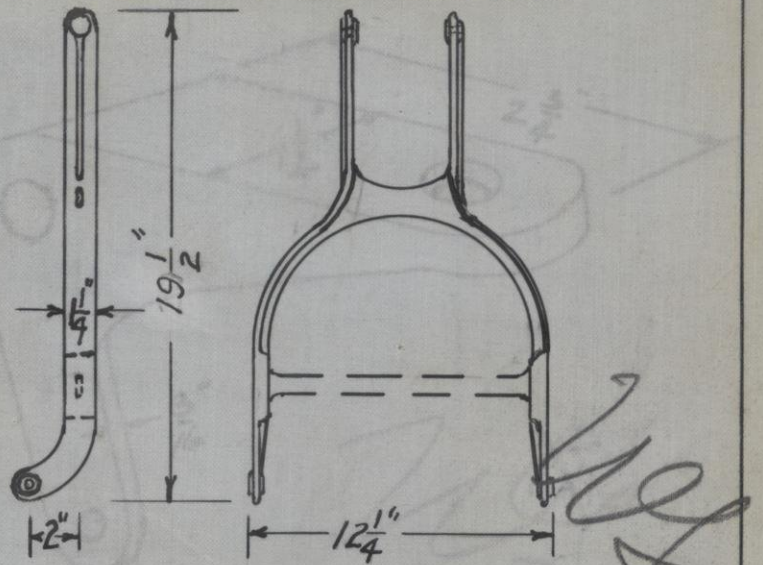

FORK FOR COASTER CHAIR

SEE B. P. NO. 19068 X-C PATTERN NO. 1447

HAMILTON MFG. CO.

DO NOT REMOVE THIS LEAF FROM BOOK

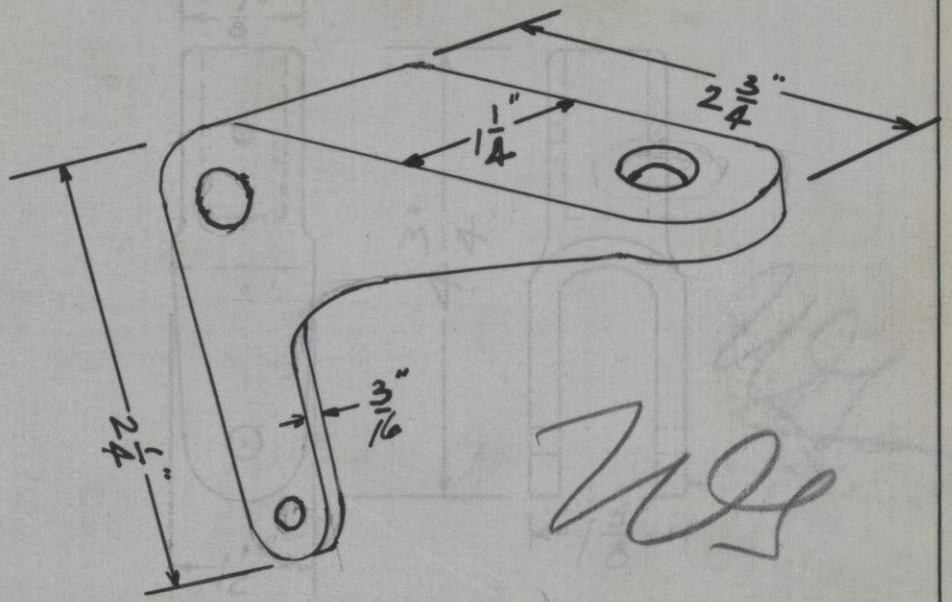

DATE-

SEE B. P. NO. 535-B

PATTERN NO. 1446

HAMILTON MFG. CO.

DO NOT REMOVE THIS LEAF FROM BOOK

DATE- 6-3-37

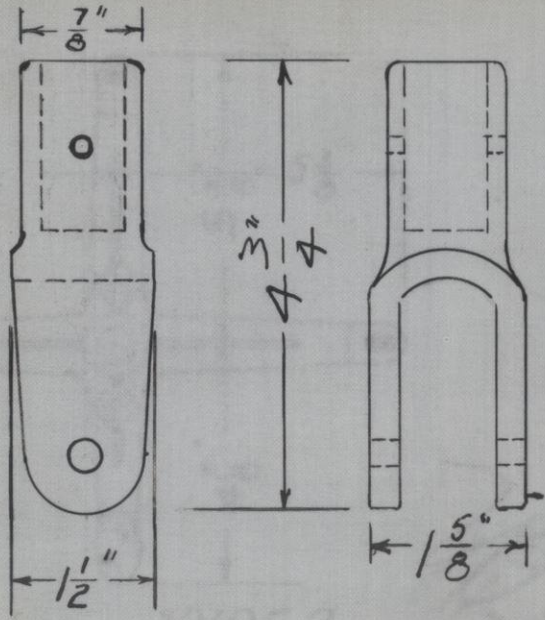

FORK FOR CASTER

SEE B. P. NO. 0021443 PATTERN NO. 1445

HAMILTON MFG. CO.

DO NOT REMOVE THIS LEAF FROM BOOK

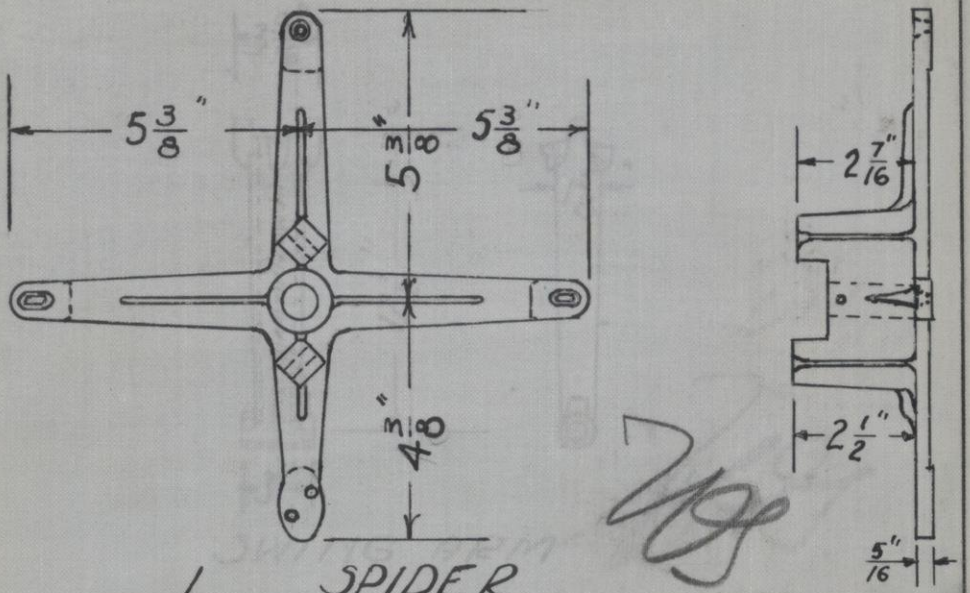

DATE- 5-4-37

1 SPIDER

SEE B. P. NO. 0021442 PATTERN NO. 1444

HAMILTON MFG. CO.

DO NOT REMOVE THIS LEAF FROM BOOK

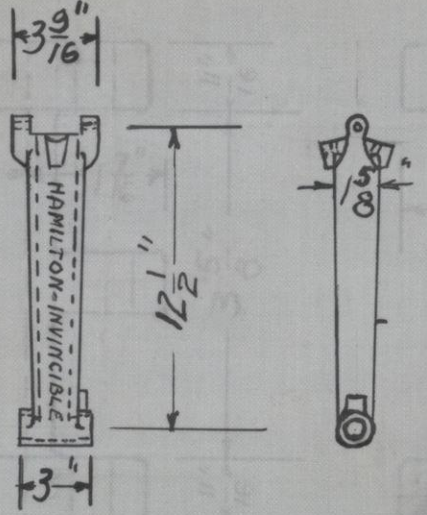

29

SWING ARM

DATE- 5-3-37

SEE B. P. NO 021442 PATTERN NO. 1443

HAMILTON MFG. CO.

DO NOT REMOVE THIS LEAF FROM BOOK

DATE- 5-3-37

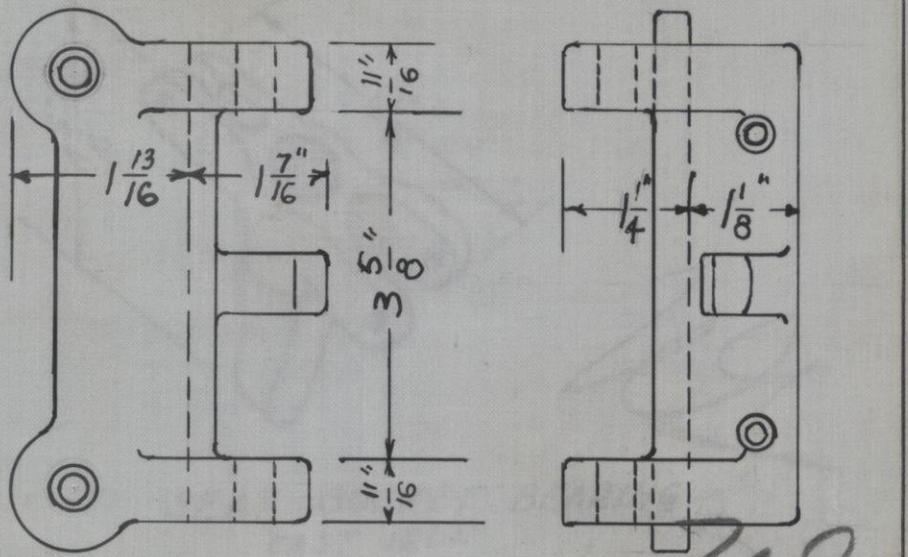

CORNER BRACKET.

SEE B. P. NO. 0021442 PATTERN NO. 1442

HAMILTON MFG. CO.

DO NOT REMOVE THIS LEAF FROM BOOK

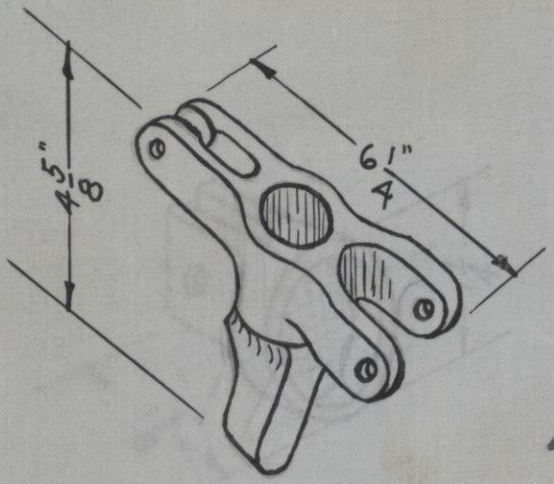

DATE- 2-22-37 Lee.

SEAT SOCKET BEARING
CAST IRON

SEE B. P. NO. 002171-A PATTERN NO. 1434

HAMILTON MFG. CO.

DO NOT REMOVE THIS LEAF FROM BOOK

DATE- 2-22-37 WEB.

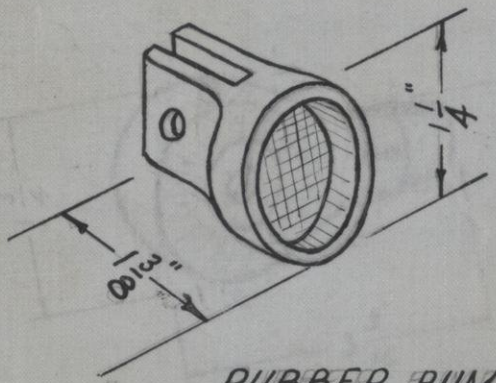

RUBBER BUMPER SOCKET
CAST IRON

SEE B. P. NO. 0021171-A PATTERN NO. 1433

3

HAMILTON MFG. CO.

DO NOT REMOVE THIS LEAF FROM BOOK

DATE- 2-1-37

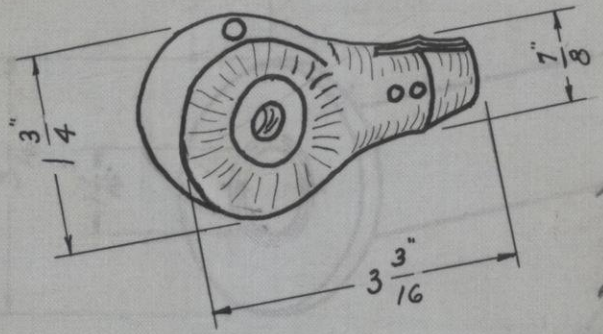

78

STIRRUP SOCKET

SEE B. P. NO. 9820-XC PATTERN NO. 1432

HAMILTON MFG. CO.

DO NOT REMOVE THIS LEAF FROM BOOK

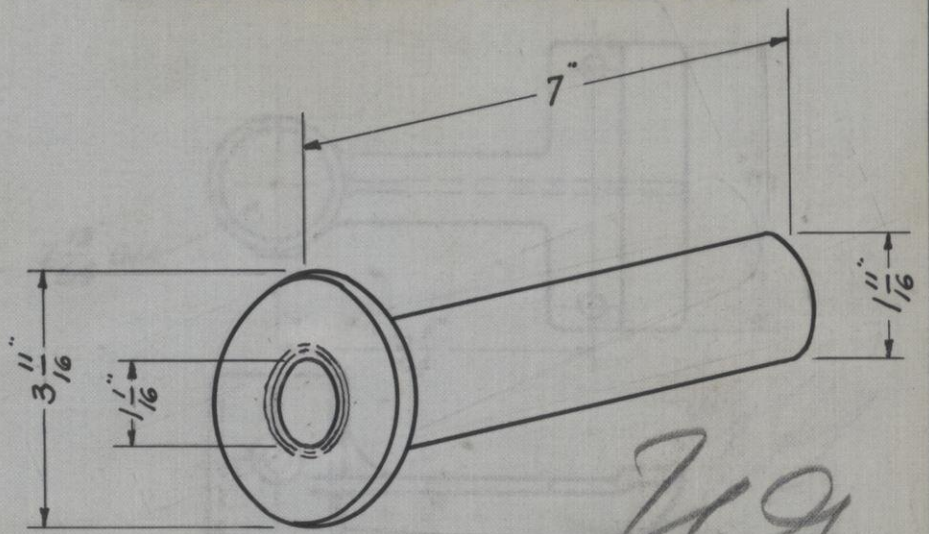

DATE- 12-2-36

WG

SPRING HOUSING

SEE B. P. NO. 9468-X10 PATTERN NO. 1431

HAMILTON MFG. CO.

DO NOT REMOVE THIS LEAF FROM BOOK

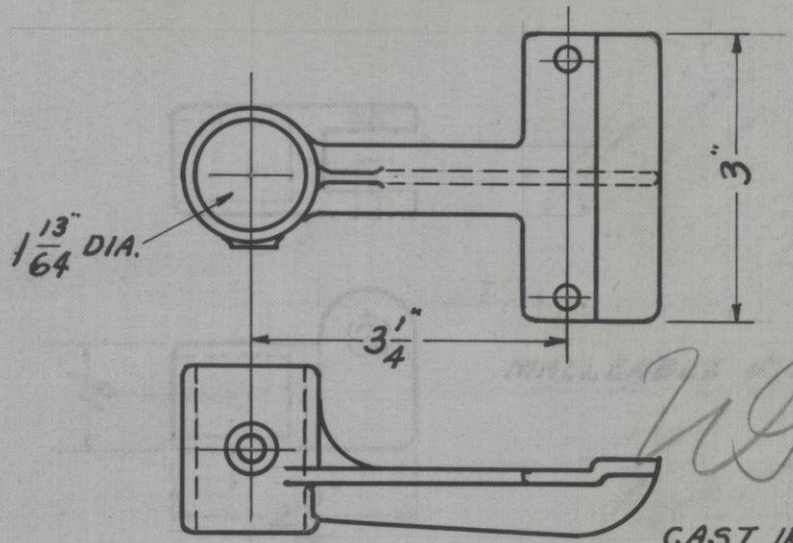

CAST IRON

DATE- 12-10-36

BRACKET FOR ADJ. LIGHT

Discontinued

SEE B. P. NO. 0020855

PATTERN NO. 1430

HAMILTON MFG. CO.

DO NOT REMOVE THIS LEAF FROM BOOK

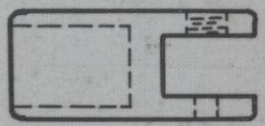

WG

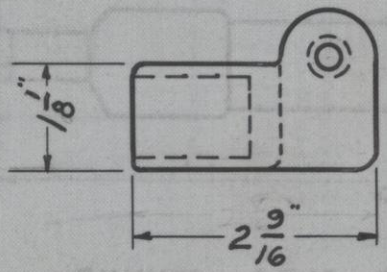

MALLEABLE IRON

SWIVEL FOR ADJ. LIGHT

Discontinued

DATE- 12-10-36

SEE B. P. NO. 0020855

PATTERN NO. 1429

HAMILTON MFG. CO.

DO NOT REMOVE THIS LEAF FROM BOOK

W

CAST IRON

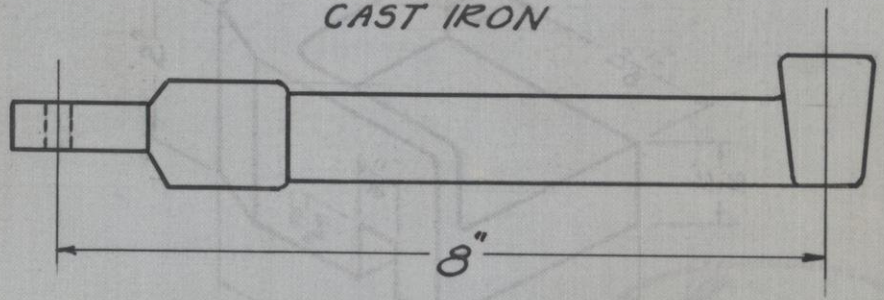

SWIVEL ARM FOR ADJ. LIGHT

Discontinued

DATE- 10-12-36

SEE B. P. NO. 0020855 PATTERN NO. 1428

HAMILTON MFG. CO.

DO NOT REMOVE THIS LEAF FROM BOOK

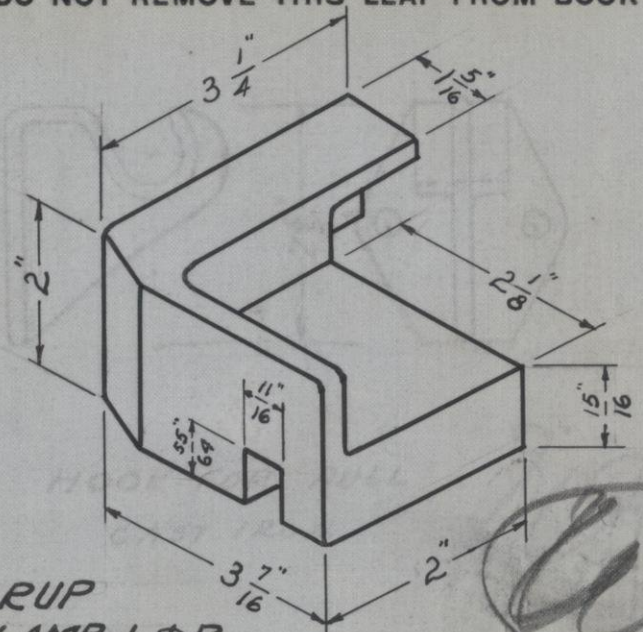

DATE- 12-8-36

STIRRUP
BAR CLAMP L & R

SEE B. P. NO. 9468-X9 PATTERN NO. 1427

X11

HAMILTON MFG. CO.

DO NOT REMOVE THIS LEAF FROM BOOK

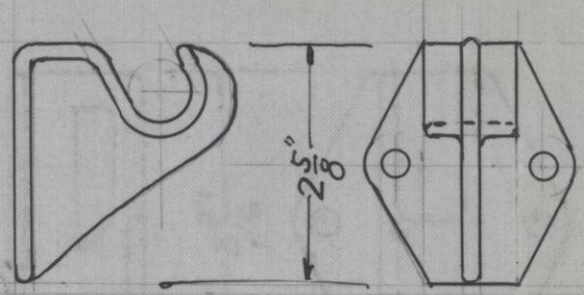

HOOK FOR PULL
CAST IRON

DATE- 10-5-36

SEE B. P. NO. 19043XE

PATTERN NO. 1426

HAMILTON MFG. CO.

DO NOT REMOVE THIS LEAF FROM BOOK

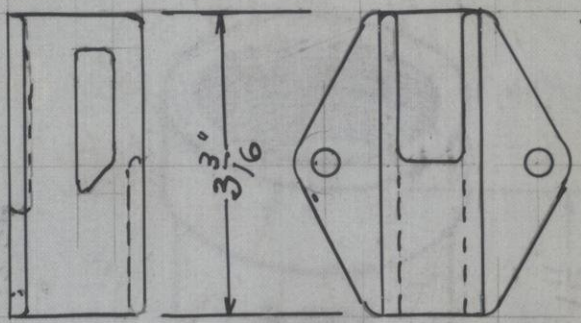

BRACKET FOR PULL

CAST IRON

W9

DATE-10-5-36

SEE B. P. NO. 19043XE

PATTERN NO. 1425

HAMILTON MFG. CO.

DO NOT REMOVE THIS LEAF FROM BOOK

29

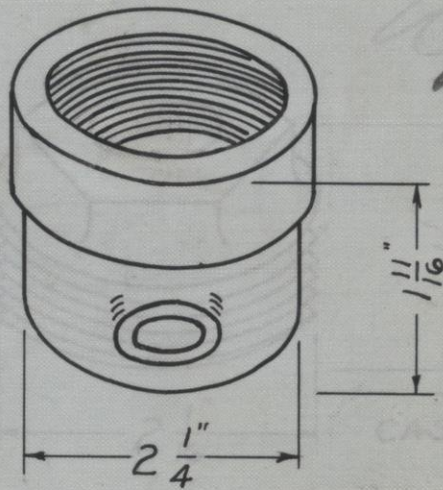

CAST BRASS

DATE- 7-27-36

FRONT END FOR DRAWER OPERATOR

SEE B. P. NO. 19043-XB PATTERN NO. 1418

HAMILTON MFG. CO.

DO NOT REMOVE THIS LEAF FROM BOOK

DATE- 7-27-36

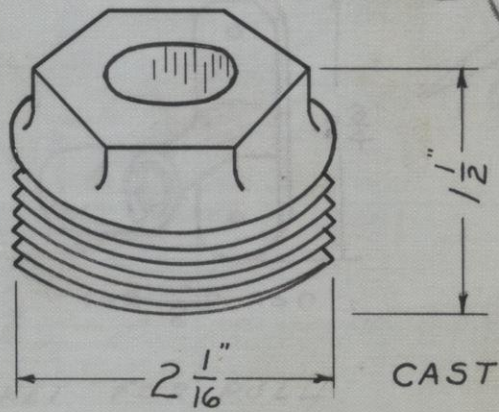

CAST BRASS

CAP FOR FRONT END

SEE B. P. NO. 19043-XB

PATTERN NO. 1417

13

HAMILTON MFG. CO.

DO NOT REMOVE THIS LEAF FROM BOOK

DATE- 8-20-35

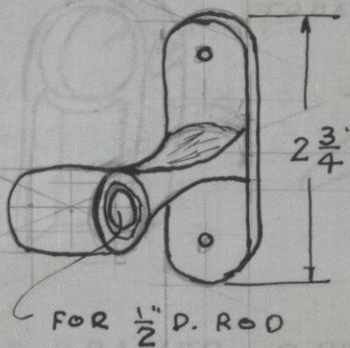

BRACKET FOR PULL

SEE B. P. NO. 19043X

PATTERN NO. 1415

13

HAMILTON MFG. CO.

DO NOT REMOVE THIS LEAF FROM BOOK



DATE- 7-20-36

REAR END OF DRAWER OPERATOR

CAST BRASS

SEE B. P. NO. 19043XB PATTERN NO. 1414

11

HAMILTON MFG. CO.

DO NOT REMOVE THIS LEAF FROM BOOK

DATE- 7-27-36

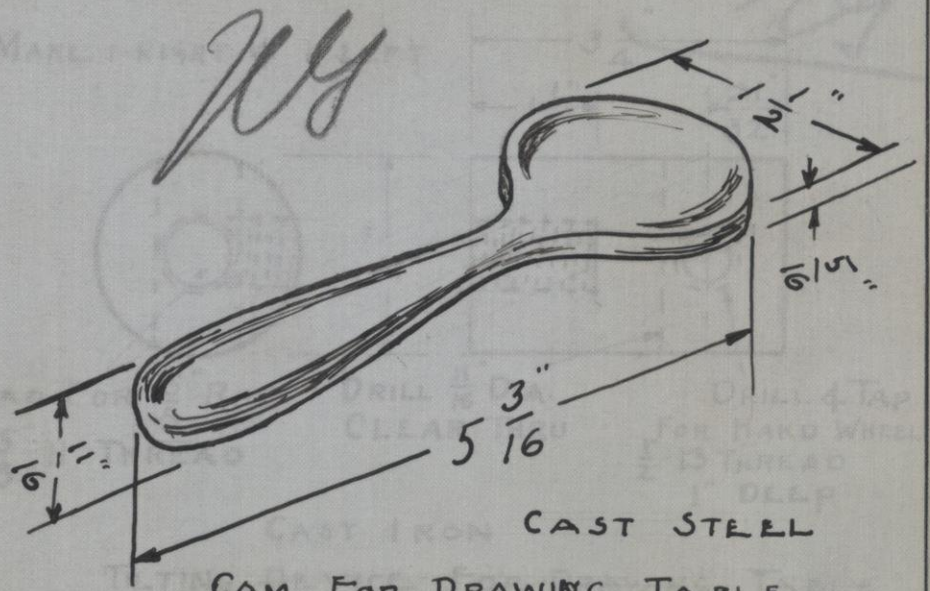

CAST STEEL

CAM FOR DRAWING TABLE

SEE B. P. NO. 572-C

PATTERN NO. 1412

HAMILTON MFG. CO.

DO NOT REMOVE THIS LEAF FROM BOOK

29

MAKE 1-RIGHT & 1-LEFT

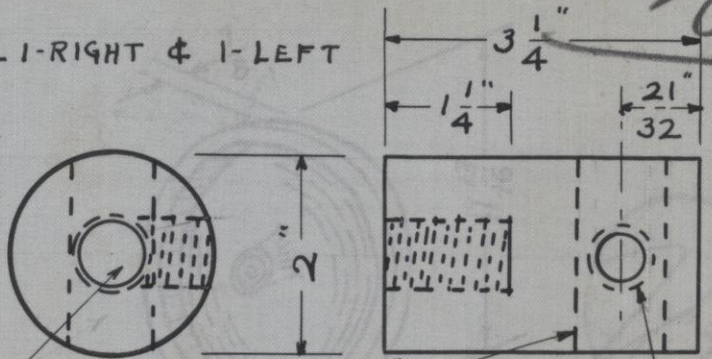

DATE- 7-27-36

CAST IRON

TILTING DEVICE FOR DRAWING TABLE

SEE B. P. NO. 29893 AHFA PATTERN NO. 1411

6

HAMILTON MFG. CO.

DO NOT REMOVE THIS LEAF FROM BOOK

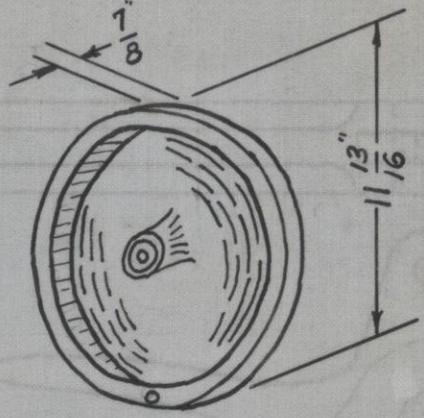

19

CAST IRON WHEEL FOR MEDICAL LINE

DATE- P.F.J. 6-25-36

SEE B. P. NO. 9468-X3 PATTERN NO. 1410

64

HAMILTON MFG. CO.

DO NOT REMOVE THIS LEAF FROM BOOK

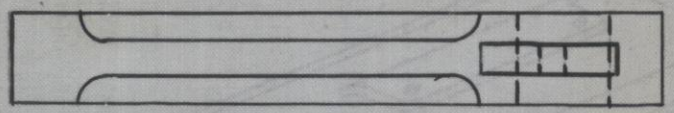

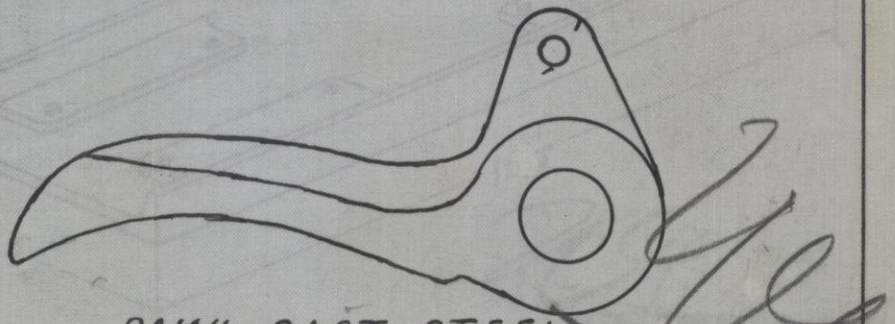

DATE- Inc. 2-27-37

PAWL - CAST STEEL

SEE B. P. NO. 9468 X7 PATTERN NO. 1409

HAMILTON MFG. CO.

DO NOT REMOVE THIS LEAF FROM BOOK

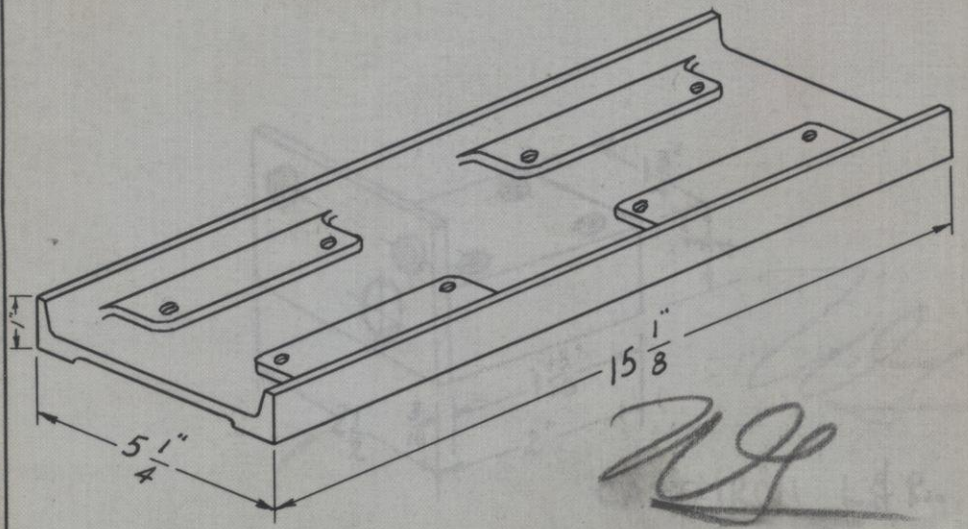

DATE-

SEE B. P. NO. 9468-6 PATTERN NO. 1406

HAMILTON MFG. CO.

DO NOT REMOVE THIS LEAF FROM BOOK

DATE- DEC 13, 12-13-35

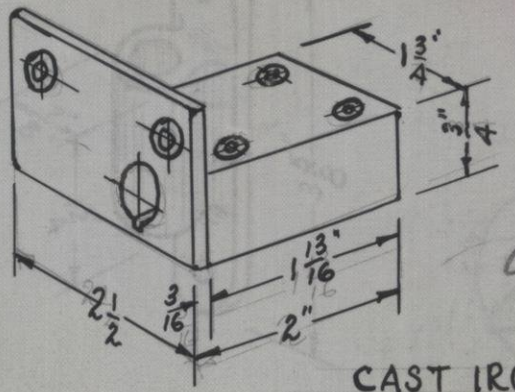

CAST IRON L & R.

SEE B. P. NO. 9468 X-4

PATTERN NO. 1397 L & R

HAMILTON MFG. CO.

DO NOT REMOVE THIS LEAF FROM BOOK

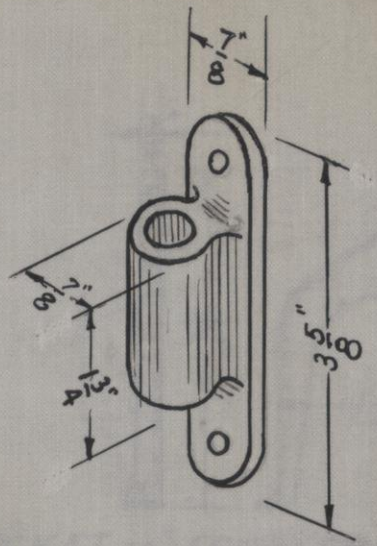

SOCKET CAST IRON

SEE B. P. NO. 29477 PATTERN NO. 1396

DATE- GEB. 12-19-35

HAMILTON MFG. CO.

DO NOT REMOVE THIS LEAF FROM BOOK

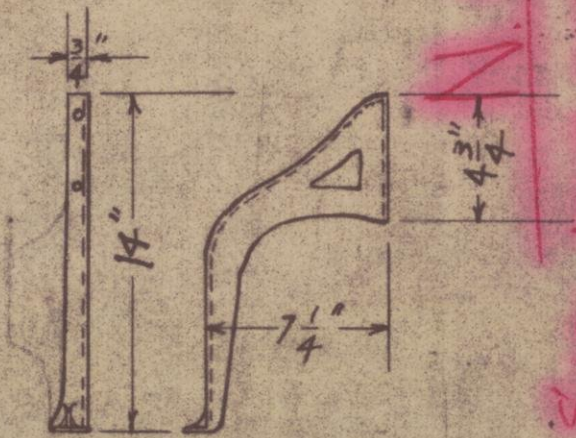

BRACKET FOR COASTER CHAIR RAIL

DATE- 4-29-37

SEE B. P. NO. 19066 XC

PATTERN NO. 1393 L.H. R.H.

See new numbers. N.G.

#1716-L.H. & #1717-R.H.

HAMILTON MFG. CO.

DO NOT REMOVE THIS LEAF FROM BOOK

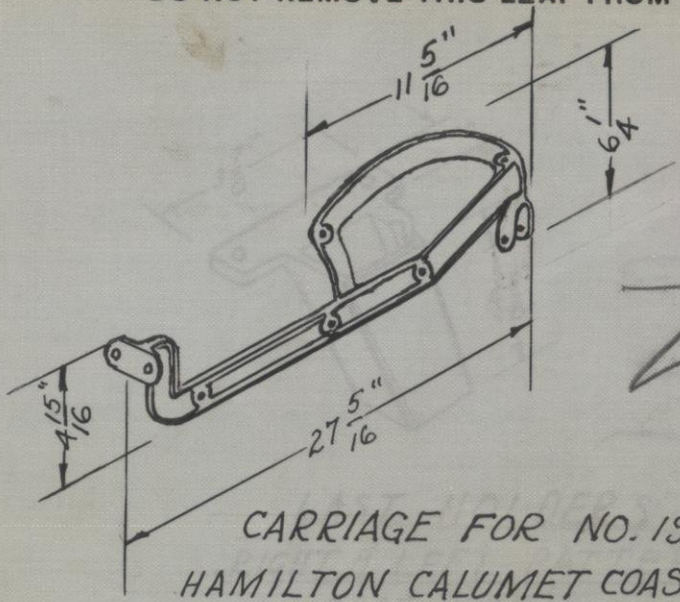

DATE- REV. 9-21-39

CARRIAGE FOR NO. 19066
HAMILTON CALUMET COASTER CHAIR
LEFT & RIGHT CAST IRON

SEE B. P. NO. 19066-X-A PATTERN NO. 1392

HAMILTON MFG. CO.

DO NOT REMOVE THIS LEAF FROM BOOK

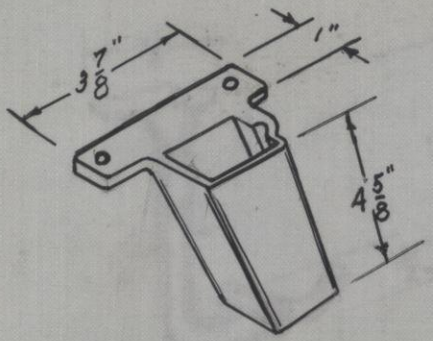

DATE- 10-30-35 L.G.B.

LAST HOLDERS

RIGHT & LEFT PATTERNS

CAST IRON

SEE B. P. NO. 9701-R.L-X PATTERN NO. 1391-R, 1391-L

HAMILTON MFG. CO.

DO NOT REMOVE THIS LEAF FROM BOOK

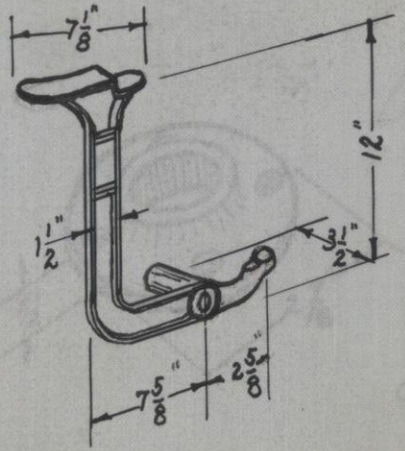

DATE- 9-16-35.

FOOT REST FOR SHOE SHINE STAND
MALLEABLE IRON 1-LEFT & 1-RIGHT

SEE B. P. NO. 9735-A PATTERN NO. 1388

HAMILTON MFG. CO.

DO NOT REMOVE THIS LEAF FROM BOOK

DATE- 9-16-35

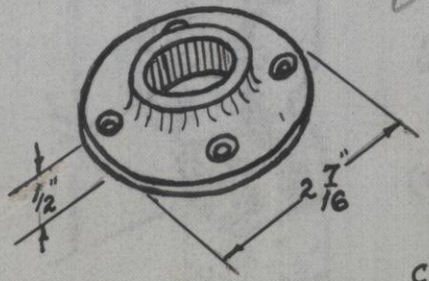

CAST IRON

SOCKET FOR SHOE SHINE STAND

SEE B. P. NO. 9735-A

PATTERN NO. 1387

HAMILTON MFG. CO.

DO NOT REMOVE THIS LEAF FROM BOOK

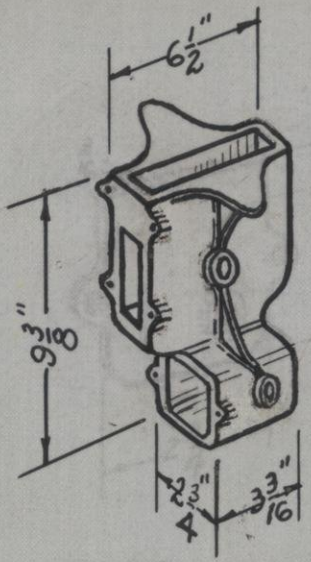

2us

(CAST IRON)

DATE-GEB 7-31-35

GEAR BOX R & L

SEE B. P. NO. 9468

PATTERN NO. 1381

HAMILTON MFG. CO.

DO NOT REMOVE THIS LEAF FROM BOOK

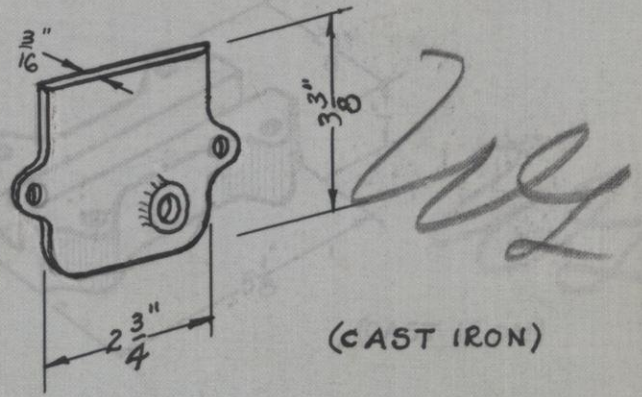

(CAST IRON)

DATE- G.E.B 7-31-35

COVER FOR GEAR BOX R & L

SEE B. P. NO. 9468-X-3 PATTERN NO. 1380

HAMILTON MFG. CO.

DO NOT REMOVE THIS LEAF FROM BOOK

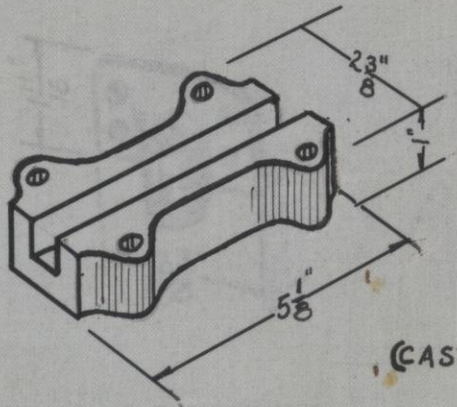

(CAST IRON)

DATE-G.E.B. 7-31-35

RACK GUIDE

SEE B. P. NO. 9468-X-3 PATTERN NO. 1379

HAMILTON MFG. CO.

DO NOT REMOVE THIS LEAF FROM BOOK

REVISED PATTERN P.F.J. 11-7-38
DATE- G.E.B 7-15-35

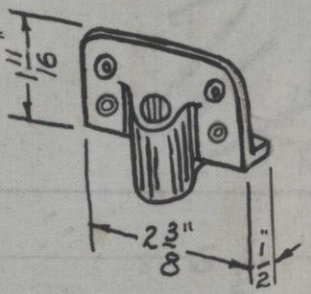

ARM REST BRACKET CAST IRON

SEE B. P. NO. 9543 PATTERN NO. 1378

HAMILTON MFG. CO.

DO NOT REMOVE THIS LEAF FROM BOOK

DATE- 7-12-35

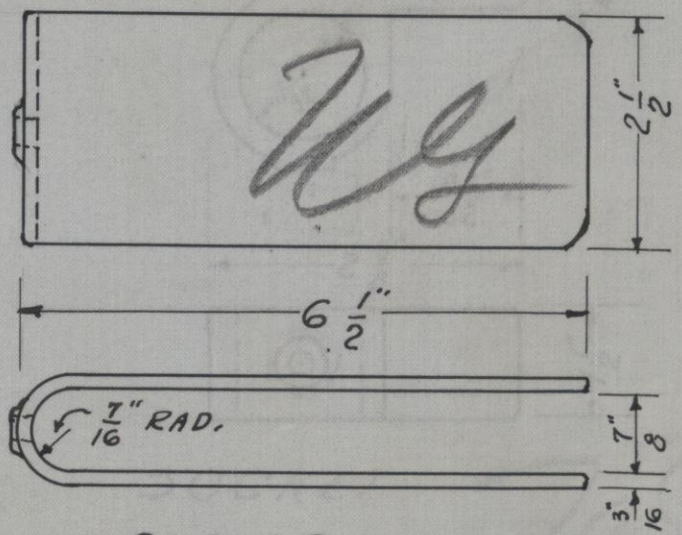

CLAMP

SEE B. P. NO. 29024-A

PATTERN NO. 1377

HAMILTON MFG. CO.

DO NOT REMOVE THIS LEAF FROM BOOK

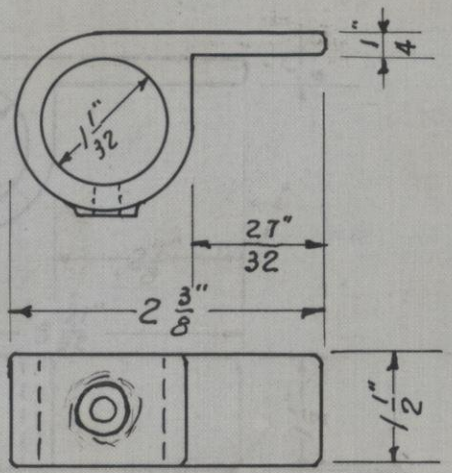

SOCKET

DATE- 7-12-35

SEE B. P. NO. 29024-A PATTERN NO. 1376

HAMILTON MFG. CO.

DO NOT REMOVE THIS LEAF FROM BOOK

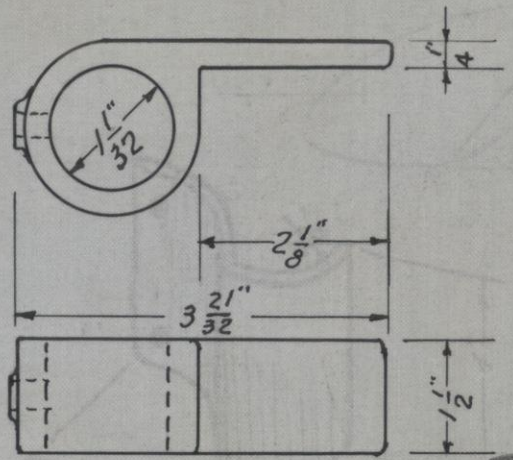

DATE- 7-12-35

SOCKET

SEE B. P. NO. 29024-A

PATTERN NO. 1375

HAMILTON MFG. CO.

DO NOT REMOVE THIS LEAF FROM BOOK

DATE- 5-21-35 EB

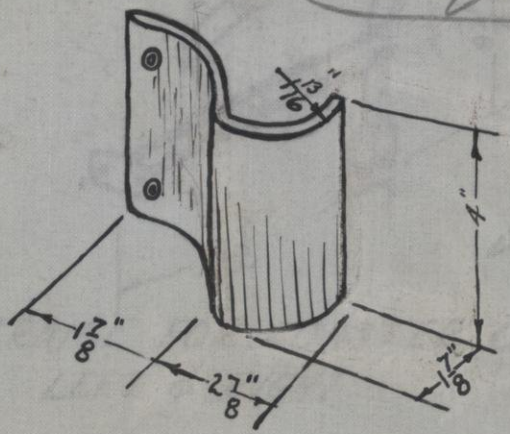

CAST IRON

SEE B. P. NO. 28800-B PATTERN NO. 1370

3

HAMILTON MFG. CO.

DO NOT REMOVE THIS LEAF FROM BOOK

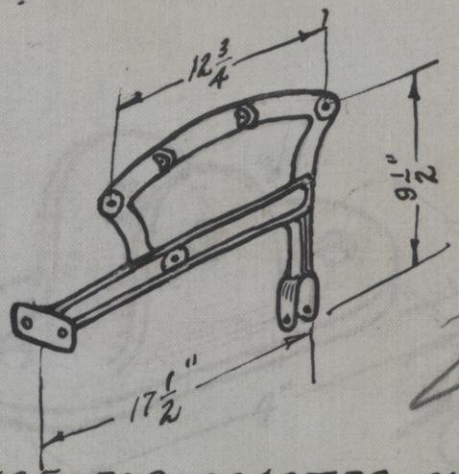

DATE- 5-16-35 G.B.

CARRAIGE FOR COASTER CHAIR
LEFT & RIGHT

SEE B. P. NO. 19068X

PATTERN NO. 1368

4

HAMILTON MFG. CO.

DO NOT REMOVE THIS LEAF FROM BOOK

DATE- Revised 6-24-36 M.E.B.

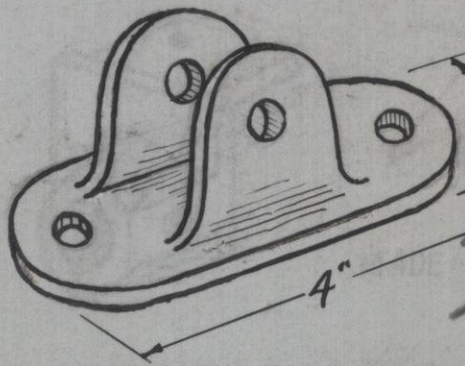

SOCKET CAST IRON

SEE B. P. NO. 9468-7 PATTERN NO. 1367

HAMILTON MFG. CO.

DO NOT REMOVE THIS LEAF FROM BOOK

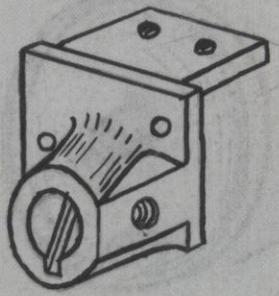

MADE:- LEFT & RIGHT

DATE- 8-21-35 KEB.

STIRRUP SOCKET

CAST IRON

SEE B. P. NO. 9468-X-4 PATTERN NO. 1366

14

HAMILTON MFG. CO.

DO NOT REMOVE THIS LEAF FROM BOOK

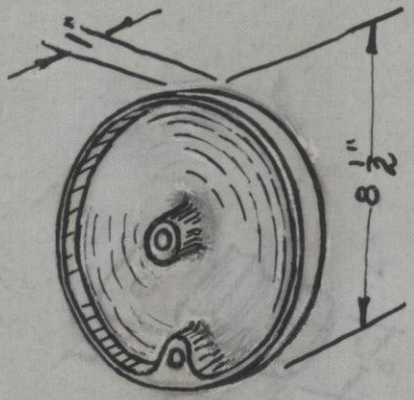

DATE- G.E.B. 6-10-35

CAST IRON

WHEEL

FOR MEDICAL LINE

SEE B. P. NO. 9468-X-3

PATTERN NO. 1365

2

HAMILTON MFG. CO.

DO NOT REMOVE THIS LEAF FROM BOOK

DATE- 5-16-35 G.B.

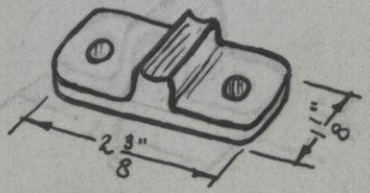

INNER BRACKET FOR BACK REST
ON COASTER CHAIR

SEE B. P. NO. 19068X-A PATTERN NO. 1364

35

HAMILTON MFG. CO.

DO NOT REMOVE THIS LEAF FROM BOOK

DATE- 5-16-35 G.B.

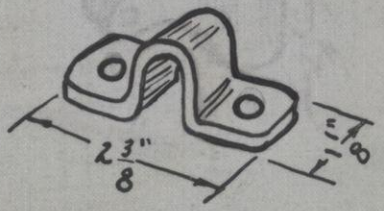

OUTER BRACKET FOR BACK REST ON COASTER CHAIR

SEE B. P. NO. 19068X-A PATTERN NO. 1363

2

HAMILTON MFG. CO.

DO NOT REMOVE THIS LEAF FROM BOOK

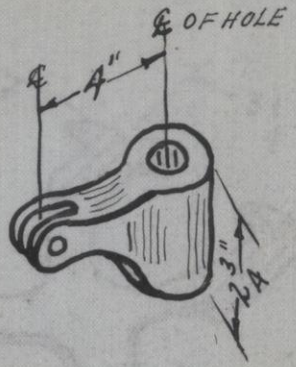

DATE- 5-16-35 G.B.

SOCKET FOR COASTER CHAIR

SEE B. P. NO. 19068 X-A PATTERN NO. 1362

3

HAMILTON MFG. CO.

DO NOT REMOVE THIS LEAF FROM BOOK

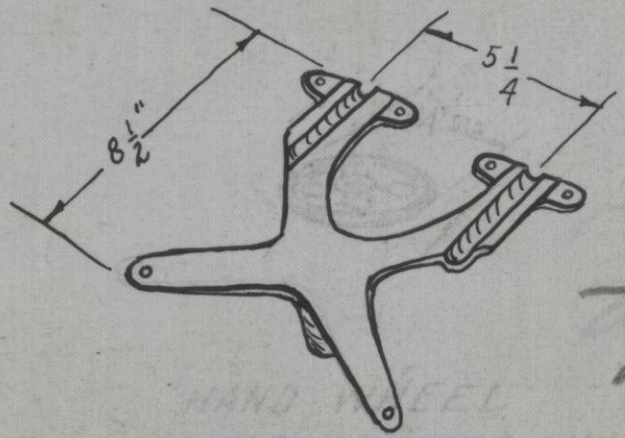

DATE- 5-16-35 G.B.

SPIDER FOR SEAT OF
COASTER CHAIR

SEE B. P. NO. 19068 X PATTERN NO. 1361

B

HAMILTON MFG. CO.

DO NOT REMOVE THIS LEAF FROM BOOK

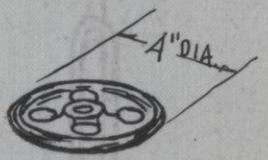

DATE- 5-16-35 G.B.

HAND WHEEL
FOR COASTER CHAIR

SEE B. P. NO. 19068 X-A PATTERN NO. 1360

3

HAMILTON MFG. CO.

DO NOT REMOVE THIS LEAF FROM BOOK

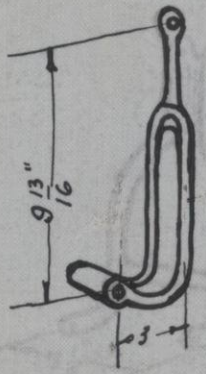

DATE- 5-16-35 G.B.

FRONT UPRIGHT
FOR COASTER CHAIR

SEE B. P. NO. 19068 X

PATTERN NO. 1359

5

HAMILTON MFG. CO.

DO NOT REMOVE THIS LEAF FROM BOOK

DATE- 5-16-35-G.B.

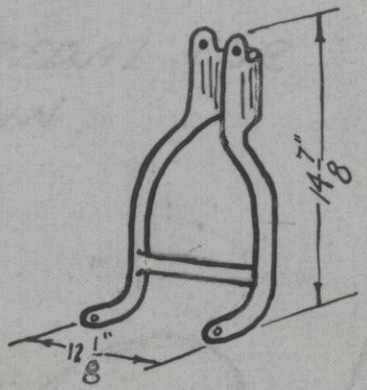

CENTER UPRIGHT
FOR COASTER CHAIR

SEE B. P. NO. 19068X-A PATTERN NO. 1358

HAMILTON MFG. CO.

DO NOT REMOVE THIS LEAF FROM BOOK

FOOT PEDAL FOR
TOWEL BIN

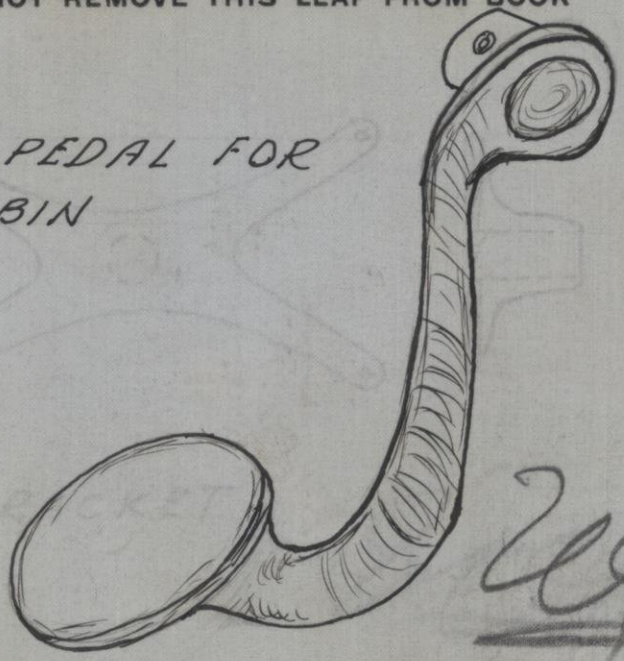

DATE- 4-18-35

SEE B. P. NO. 28800-F

PATTERN NO. 1357

HAMILTON MFG. CO.

DO NOT REMOVE THIS LEAF FROM BOOK

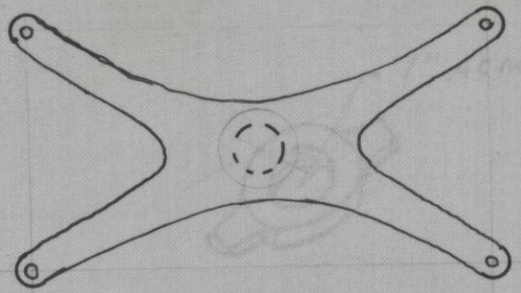

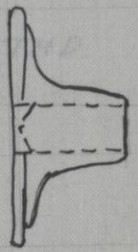

DATE- 3-25-35

BRACKET

SEE B. P. NO. 0019577

PATTERN NO. 1356

HAMILTON MFG. CO.

DO NOT REMOVE THIS LEAF FROM BOOK

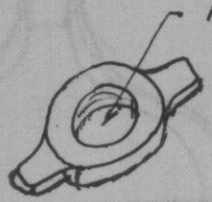

NUT

DATE- 3-25-35

SEE B. P. NO. 001 9577

PATTERN NO. 1355

HAMILTON MFG. CO.

DO NOT REMOVE THIS LEAF FROM BOOK

DATE- 3-25-35

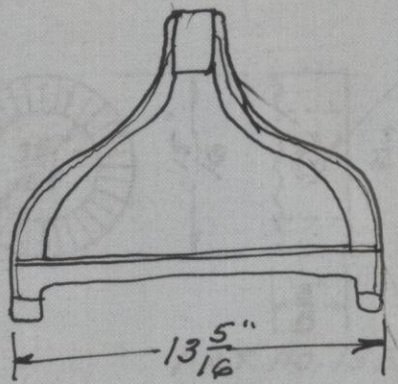

FORK

SEE B. P. NO. 0019577

PATTERN NO. 1354

HAMILTON MFG. CO.

DO NOT REMOVE THIS LEAF FROM BOOK

DATE- 3-12-35

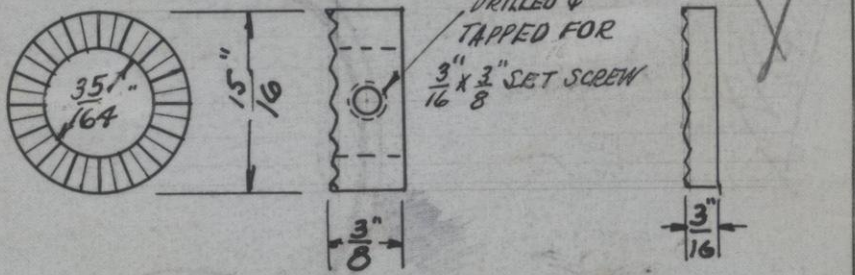

PAT. NO. 1353-A PAT. NO. 1353 B

CORROGATED WASHERS

CAST STEEL

— 3 OF EACH REQ'D. PER LIGHT —

SEE B. P. NO. 19067 PATTERN NO. 1353A-B

HAMILTON MFG. CO.

DO NOT REMOVE THIS LEAF FROM BOOK

DATE-3-6-35

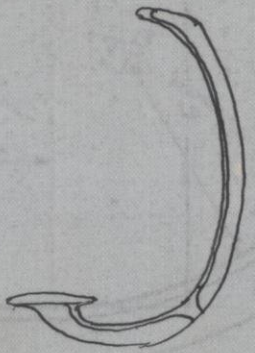

VG

FOOT PEDAL FOR WASTE RECP. for SINK CABT

SEE B. P. NO. 0019543-C

PATTERN NO. 1352

HAMILTON MFG. CO.

DO NOT REMOVE THIS LEAF FROM BOOK

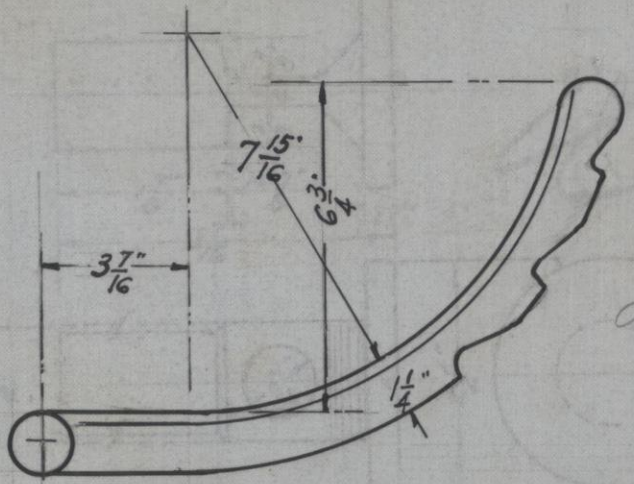

DATE-

SHELF SUPPORT

SEE B. P. NO. 9466-3 PATTERN NO. 1350

HAMILTON MFG. CO.

DO NOT REMOVE THIS LEAF FROM BOOK

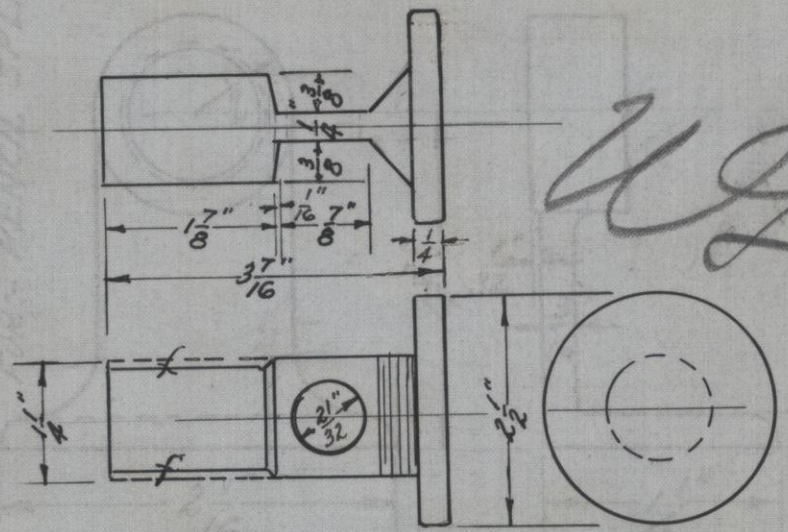

DATE- 12-3-34 GB.

CAST STEEL BRAKE FOR AUTO-SHIFT TABLE

SEE B. P. NO. 0019079-G MOULDING NO. 1342

HAMILTON MFG. CO.

DO NOT REMOVE THIS LEAF FROM BOOK

DATE- 6-27-34

CAST IRON
FOR:- PENCIL SPLICER

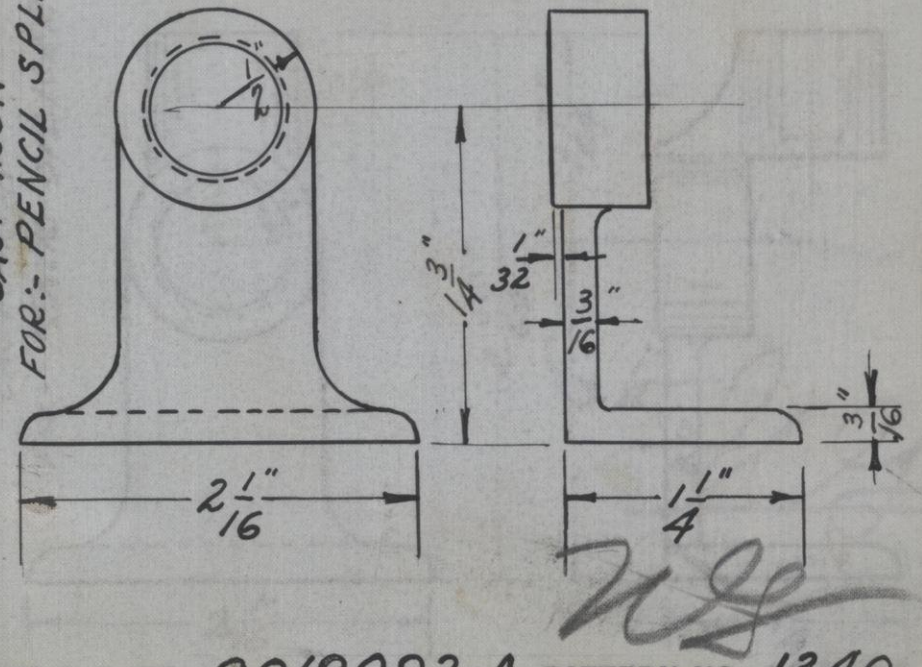

SEE B. P. NO. 0019092-A PATTERN NO. 1340

HAMILTON MFG. CO.

DO NOT REMOVE THIS LEAF FROM BOOK

DATE- 6-27-34

CAST IRON

FOR:- PENCIL SPLICER

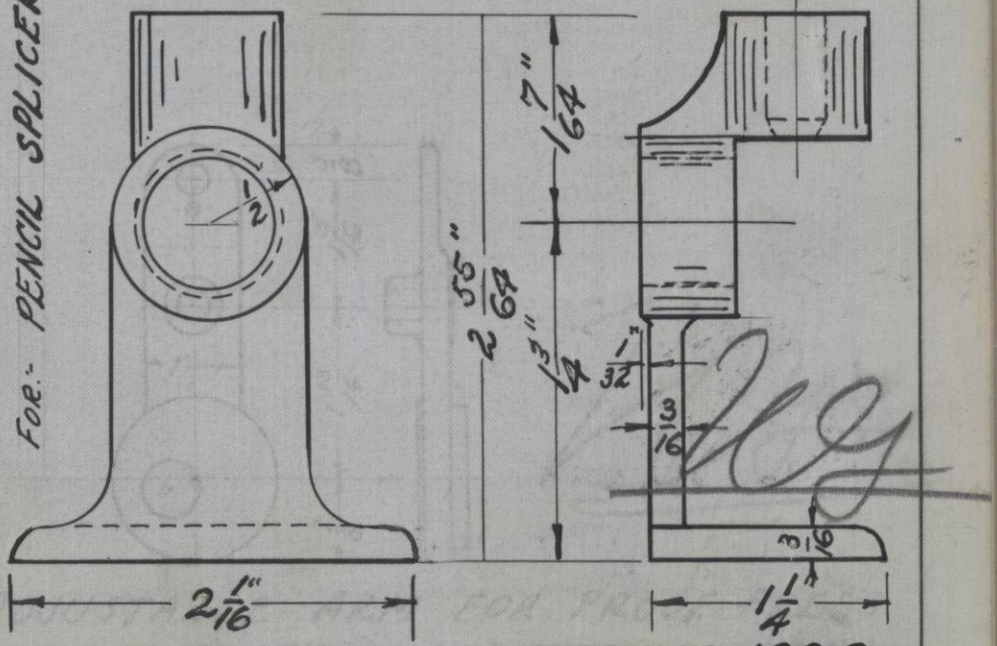

SEE B. P. NO. 0019092-A

PATTERN NO. 1339

HAMILTON MFG. CO.

DO NOT REMOVE THIS LEAF FROM BOOK

DATE- 7-2-34 - R.A.S.

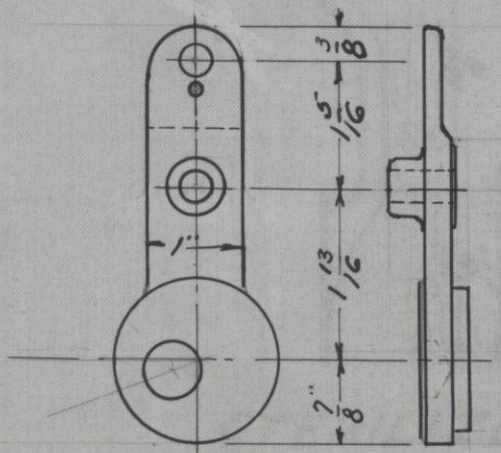

ADJUSTABLE ARM FOR PROOF PRESS

SEE B. P. NO. 0019067 PATTERN NO. 1338.

HAMILTON MFG. CO.

DO NOT REMOVE THIS LEAF FROM BOOK

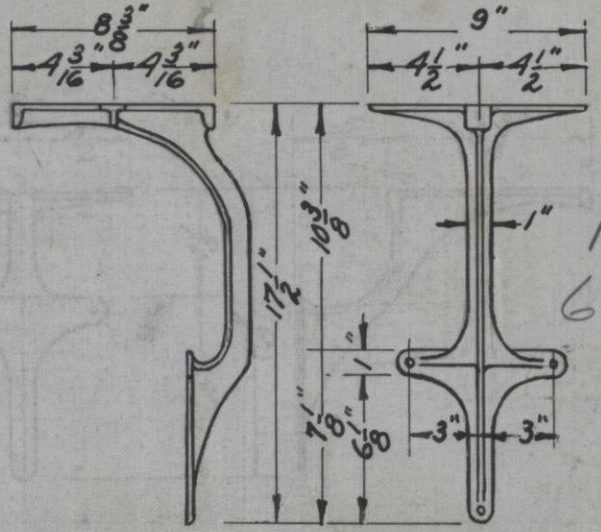

N. G.
6-20-66

DATE- 5-23-34 G.B.

STERILIZER BRACKET

SEE B. P. NO. 9541-A PATTERN NO. 1336

HAMILTON MFG. CO.

DO NOT REMOVE THIS LEAF FROM BOOK

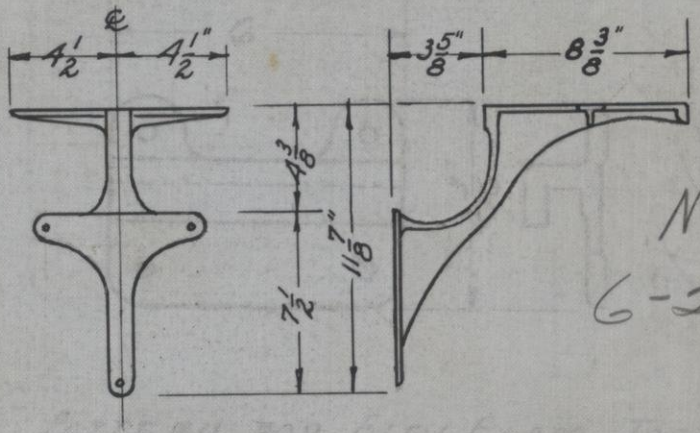

N. G.
6-20-66

DATE- 5-17-34 G.B.

STERILIZER BRACKET

SEE B. P. NO. 9530A-W

PATTERN NO. 1334

HAMILTON MFG. CO.

DO NOT REMOVE THIS LEAF FROM BOOK

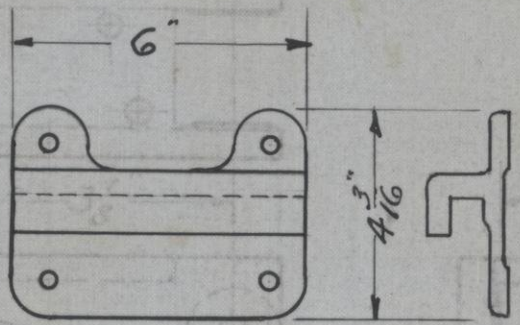

PATTERN FOR ELEV. EXAM. TABLE.

DATE- R.A.S. 6-29-34.

SEE B. P. NO. 9479 - D-W PATTERN NO. 1333

HAMILTON MFG. CO.

DO NOT REMOVE THIS LEAF FROM BOOK

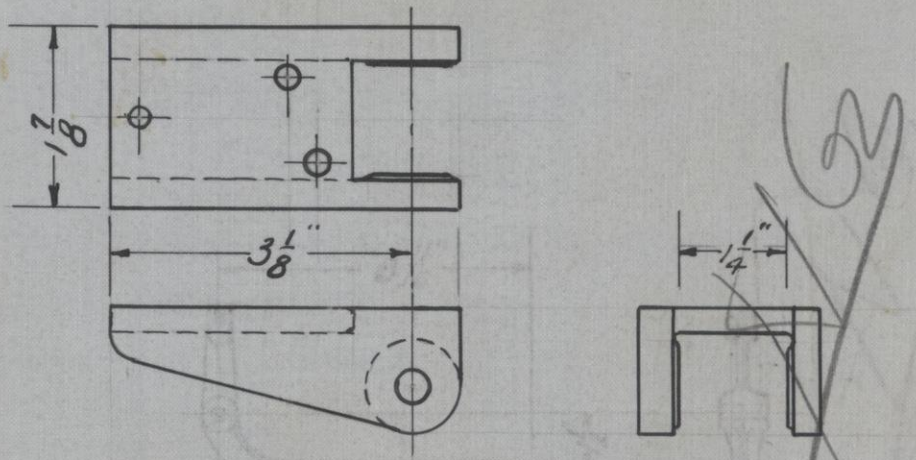

DATE- 6-29-34.

PATTERN FOR ELEV. EXAM. TABLE.

SEE B. P. NO. 9470 C-W PATTERN NO. 1332.

HAMILTON MFG. CO.

DO NOT REMOVE THIS LEAF FROM BOOK

DATE- 6-29-34 - R.A.S.

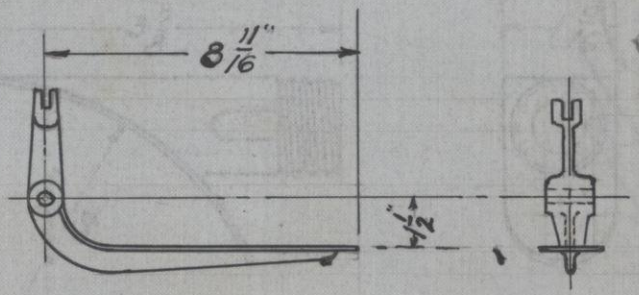

PATTERN FOR ELEV. EXAM. TABLE

SEE B. P. NO. 9470-C-W PATTERN NO. 1331.

HAMILTON MFG. CO.

DO NOT REMOVE THIS LEAF FROM BOOK

DATE- 7-2-34 - R.A.S.

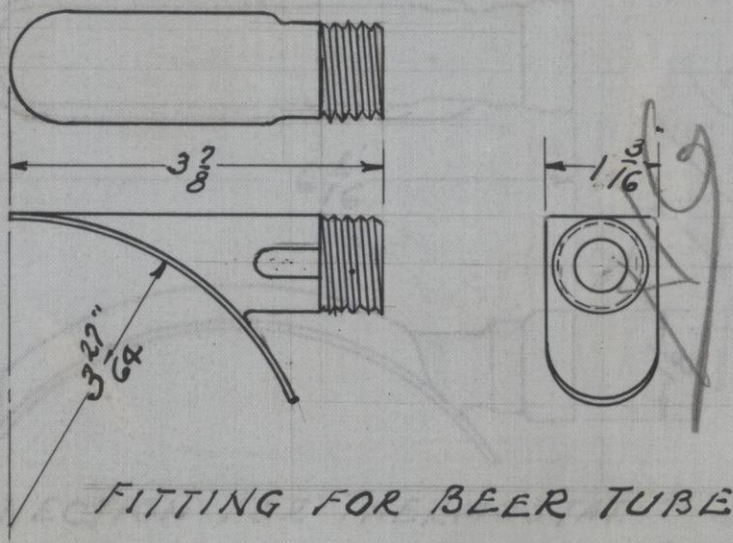

FITTING FOR BEER TUBE

SEE B. P. NO. 0018703-L PATTERN NO. 1326.

HAMILTON MFG. CO.

DO NOT REMOVE THIS LEAF FROM BOOK

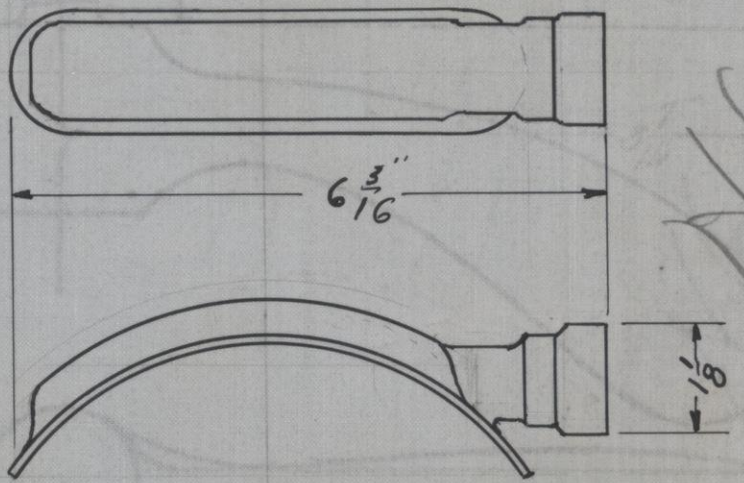

DATE- 1-2-34- R.A.S.

CONNECTION FOR THERMOSTAT.

SEE B. P. NO. 0018703-J. PATTERN NO. 1325

HAMILTON MFG. CO.

DO NOT REMOVE THIS LEAF FROM BOOK

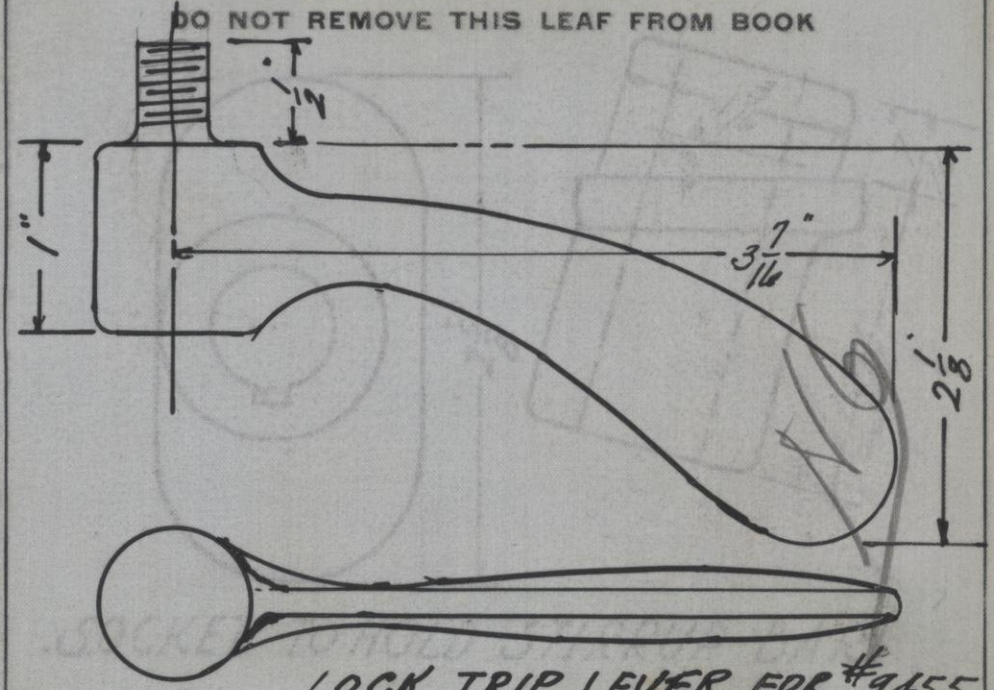

DATE-12-4-33

LOCK TRIP LEVER FOR #9455

SEE B. P. NO. 9455-H W. PATTERN NO. 1324

HAMILTON MFG. CO.

DO NOT REMOVE THIS LEAF FROM BOOK

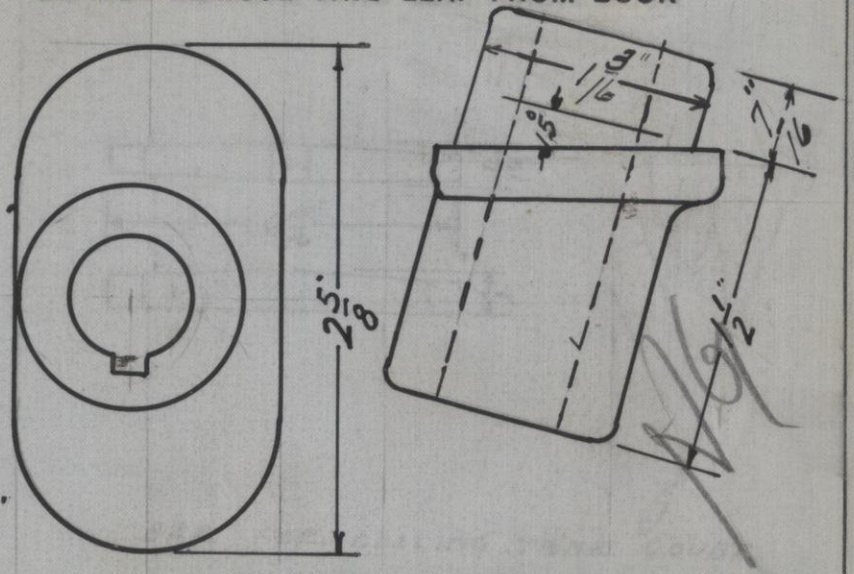

DATE- 11-25-33

SOCKET TO HOLD STIRRUP BAR

SEE B. P. NO. 9455 H-W PATTERN NO. 1323

1323

HAMILTON MFG. CO.

DO NOT REMOVE THIS LEAF FROM BOOK

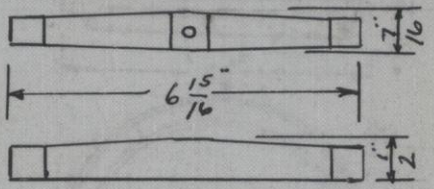

DATE- 12-1-33

BAR FOR COOLING TANK COVER
BEER DISPENSER

SEE B. P. NO. 0018703-B

PATTERN NO. 1322

HAMILTON MFG. CO.

DO NOT REMOVE THIS LEAF FROM BOOK

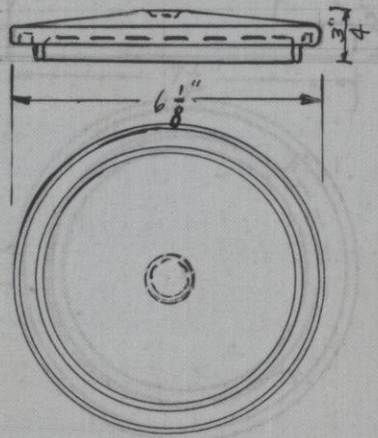

COOLING TANK COVER
BEER DISPENSER

DATE- 12-11-33

SEE B. P. NO. 0018703-B

PATTERN NO. 1321

HAMILTON MFG. CO.

DO NOT REMOVE THIS LEAF FROM BOOK

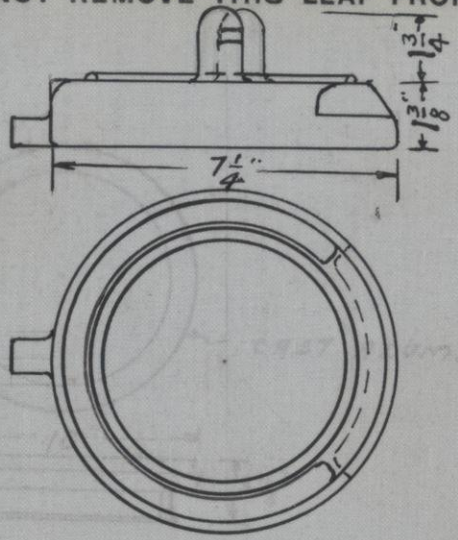

COVER FOR TANK
BEER DISPENSER

DATE- 12-1-33

SEE B. P. NO. 0018703-B

PATTERN NO. 1320

HAMILTON MFG. CO.

DO NOT REMOVE THIS LEAF FROM BOOK

DATE- 12-11-33

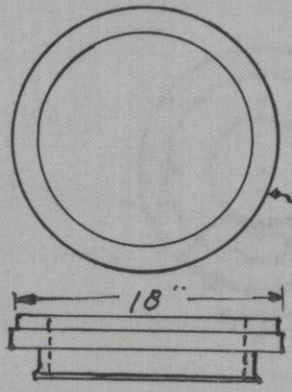

BASE FOR COOLER

SEE B. P. NO. 0018650-H

PATTERN NO. 1319-A

HAMILTON MFG. CO.

DO NOT REMOVE THIS LEAF FROM BOOK

DATE- 10-19-33

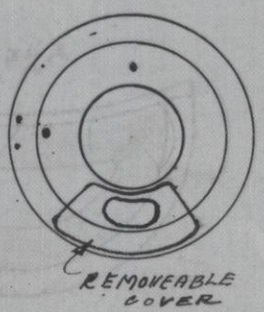

TOP FOR COOLER

SEE B. P. NO. 0018650-G

PATTERN NO. 1319

HAMILTON MFG. CO.

DO NOT REMOVE THIS LEAF FROM BOOK

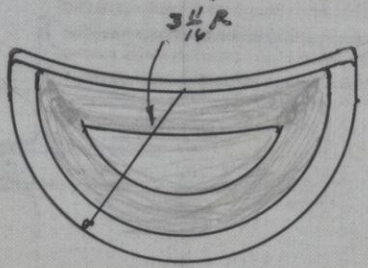

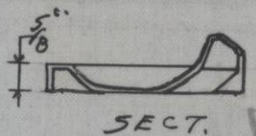

DRIP TANK COVER
CAST. ALUM

DATE- 11-15-33

SEE B. P. NO. 0018650-F

PATTERN NO. 1318

HAMILTON MFG. CO.

DO NOT REMOVE THIS LEAF FROM BOOK

DATE- 12-11-33

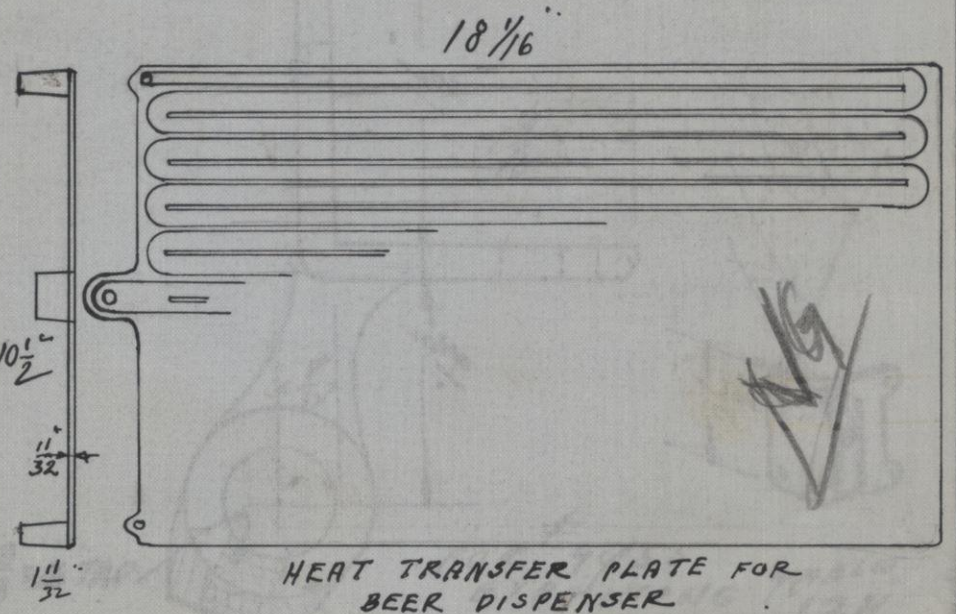

HEAT TRANSFER PLATE FOR BEER DISPENSER

SEE B. P. NO. 0018703-H

PATTERN NO. 1317

HAMILTON MFG. CO.

DO NOT REMOVE THIS LEAF FROM BOOK

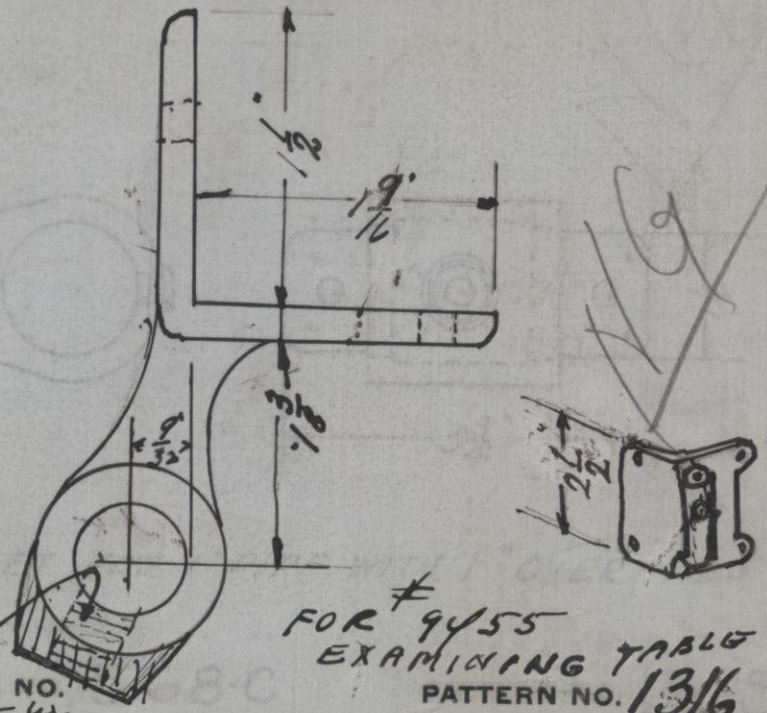

DATE- 8/13

3/8 x 16 TAP

SEE B. P. NO. 9455-W.

FOR # 9455 EXAMINING TABLE

PATTERN NO. 1316

HAMILTON MFG. CO.

DO NOT REMOVE THIS LEAF FROM BOOK

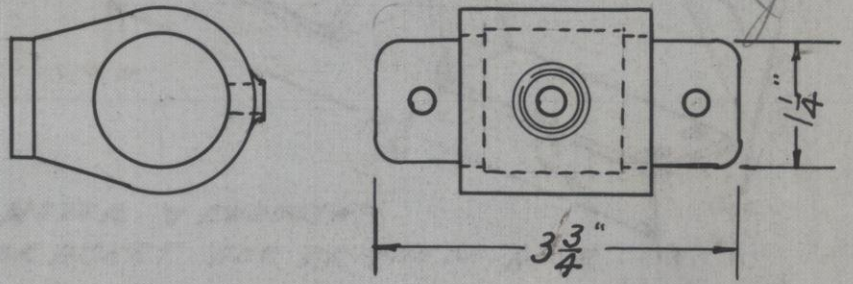

DATE- 8-16-33 GEC

SOCKET FOR 1" PIPE WITH 1" OVERHANG.

SEE B. P. NO. 568-C PATTERN NO. 1315

HAMILTON MFG. CO.

DO NOT REMOVE THIS LEAF FROM BOOK

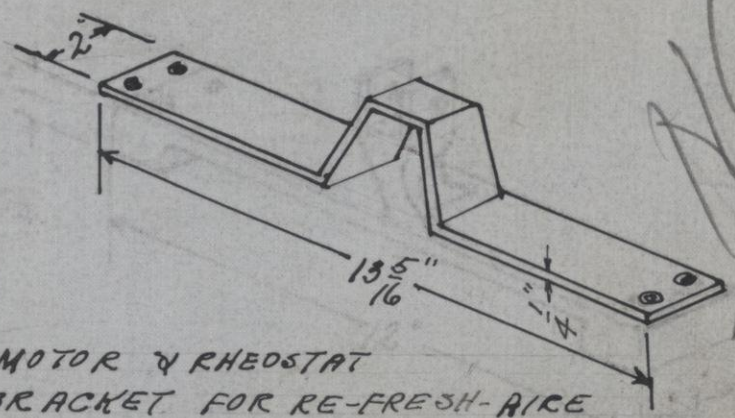

MOTOR & RHEOSTAT
BRACKET FOR RE-FRESH-AIRE
UNIT PER B.P. NO. 27888

MATERIAL - ALUMINUM. 1 REQ'D.

DATE-

SEE B. P. NO. 27888-C PATTERN NO. 1313.

HAMILTON MFG. CO.

DO NOT REMOVE THIS LEAF FROM BOOK

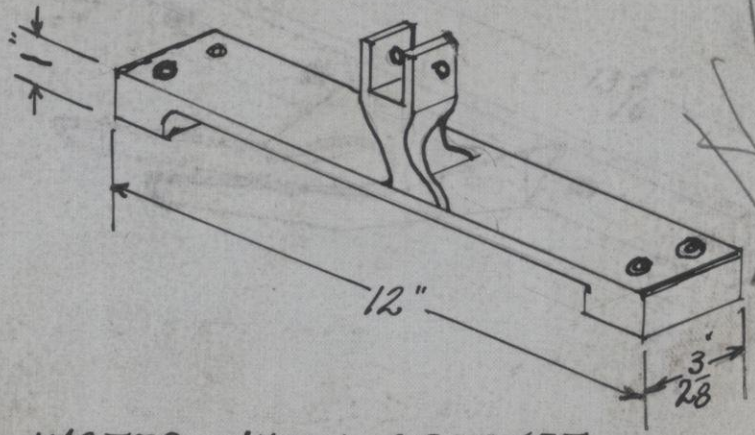

DATE-

WATER WHEEL BRACKET
FOR RE-FRESH-AIRE UNIT
PER B.P. 27888.
MATERIAL- ALUMINUM. 1 REQ'D

SEE B. P. NO. 27888-C PATTERN NO. 1312

HAMILTON MFG. CO.

DO NOT REMOVE THIS LEAF FROM BOOK

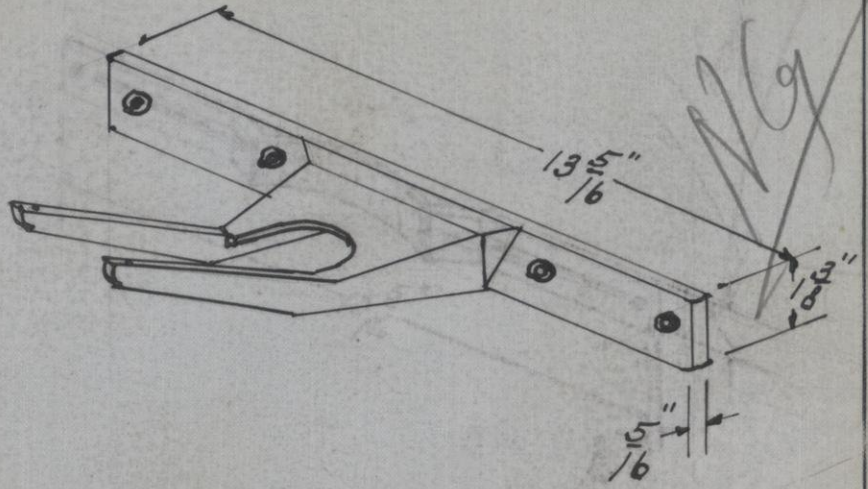

DATE-

LOWER BOTTLE BRACKET

MATERIAL - ALUMINUM

1 REQD FOR AIR CONDITIONER PER B.P. 27888.

SEE B. P. NO. 27888-C. PATTERN NO. 1311

HAMILTON MFG. CO.

DO NOT REMOVE THIS LEAF FROM BOOK

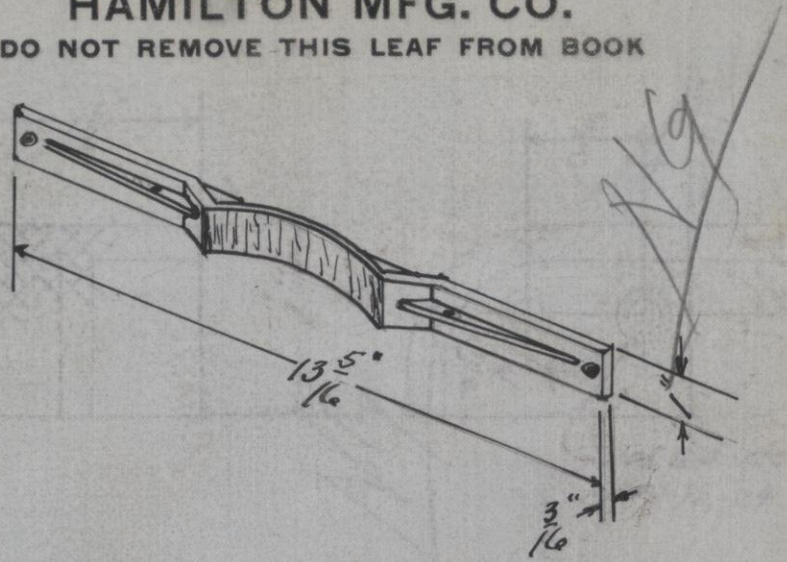

DATE-

UPPER BOTTLE BRACKET

MATERIAL- ALUMINUM. 1-REQ'D.

SEE B. P. NO. 27888-C PATTERN NO. 1310

HAMILTON MFG. CO.

DO NOT REMOVE THIS LEAF FROM BOOK

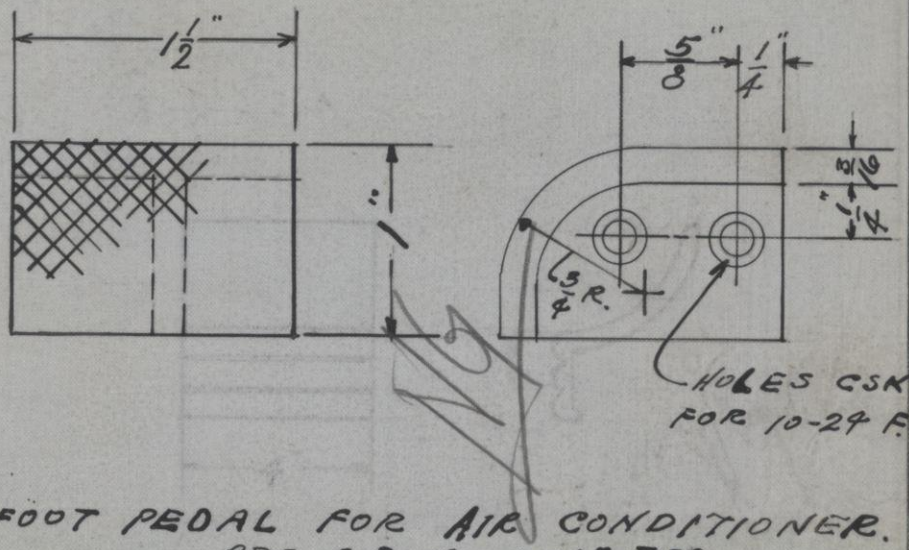

DATE-

FOOT PEDAL FOR AIR CONDITIONER.
PER B.P. NO. 0018532

MATERIAL - BRASS 1 REQ'D.

SEE B. P. NO. 0018532-P PATTERN NO. 1308

HAMILTON MFG. CO.

DO NOT REMOVE THIS LEAF FROM BOOK

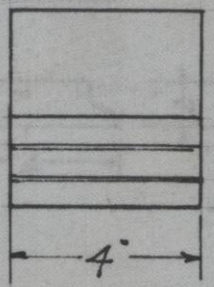



TOE BASE CORNER

DATE-

SEE B. P. NO. ~~144GW~~ 0019208-1

PATTERN NO. 1301

HAMILTON MFG. CO.

DO NOT REMOVE THIS LEAF FROM BOOK

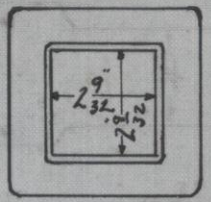

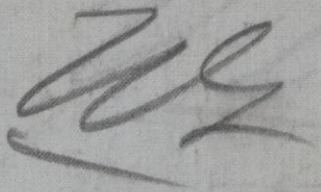

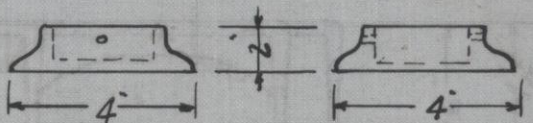

SHOE FOR TOP SUPPT.

DATE- 12-22-32

SEE B. P. NO. 0017620-T

PATTERN NO 1290

HAMILTON MFG. CO.

DO NOT REMOVE THIS LEAF FROM BOOK

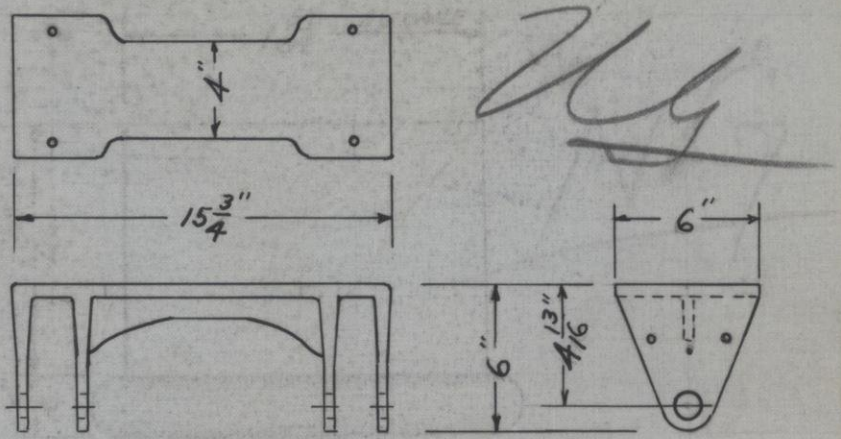

WHEEL BRACKET FOR TRUCK

CAST IRON

DATE- 1-9-33

SEE B. P. NO. 0018252 PATTERN NO. 1289

HAMILTON MFG. CO.

DO NOT REMOVE THIS LEAF FROM BOOK

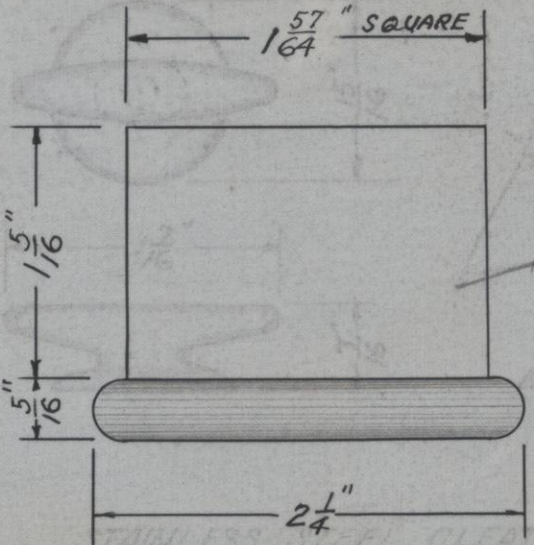

NG

DATE- 12-6-32

ALUMINUM SHOE FOR TABLE LEG.

SEE B. P. NO. 0018263 PATTERN NO. 1288

1288

HAMILTON MFG. CO.

DO NOT REMOVE THIS LEAF FROM BOOK

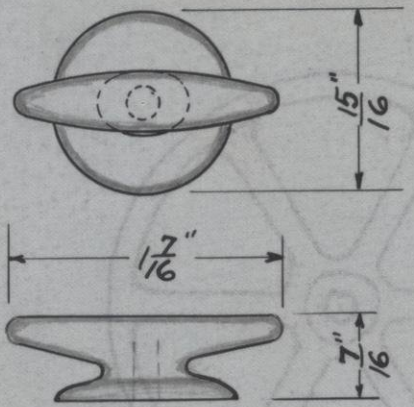

NG

DATE- 12-6-32

STAINLESS STEEL CLEAT

SEE B. P. NO. 0018263 PATTERN NO. 1287

1287

HAMILTON MFG. CO.

DO NOT REMOVE THIS LEAF FROM BOOK

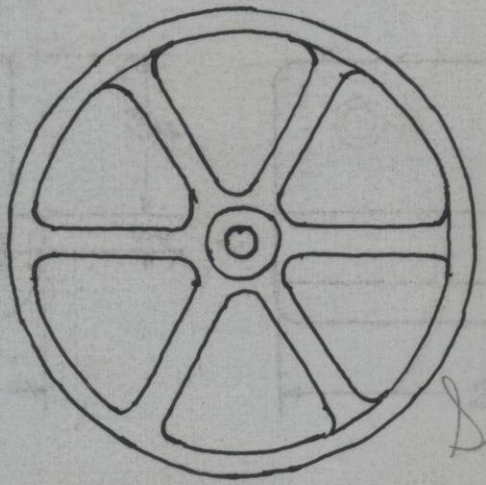

See pattern No. 1685

DATE-

HAND WHEEL

1 REQ'D

SEE B. P. NO. 9500-9505-H.W.

PATTERN NO. 1284.

HAMILTON MFG. CO.

DO NOT REMOVE THIS LEAF FROM BOOK

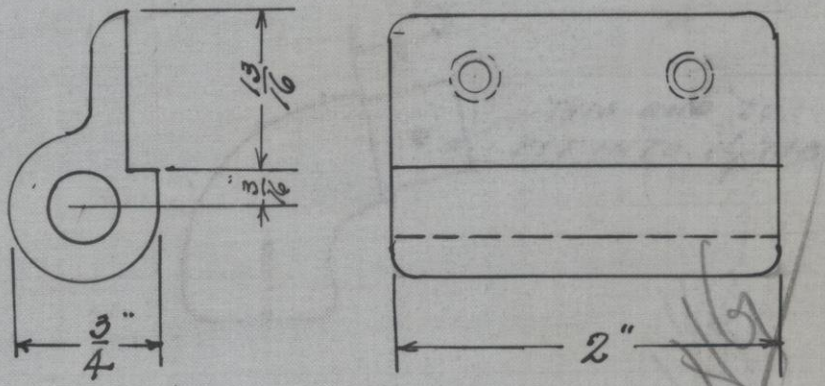

DATE-

CAST IRON RING SOCKET
FOR BED SIDE TABLE

SEE B. P. NO. 27536-A PATTERN NO. 1272

HAMILTON MFG. CO.

DO NOT REMOVE THIS LEAF FROM BOOK

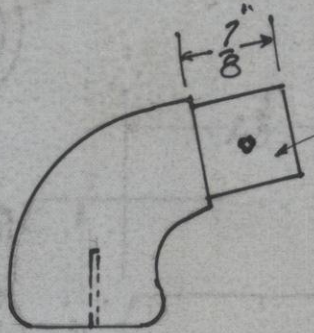

LEG TOE FOR
BED SIDE TABLE

DATE-

SEE B. P. NO. 27536-C PATTERN NO. 1271

HAMILTON MFG. CO.

DO NOT REMOVE THIS LEAF FROM BOOK

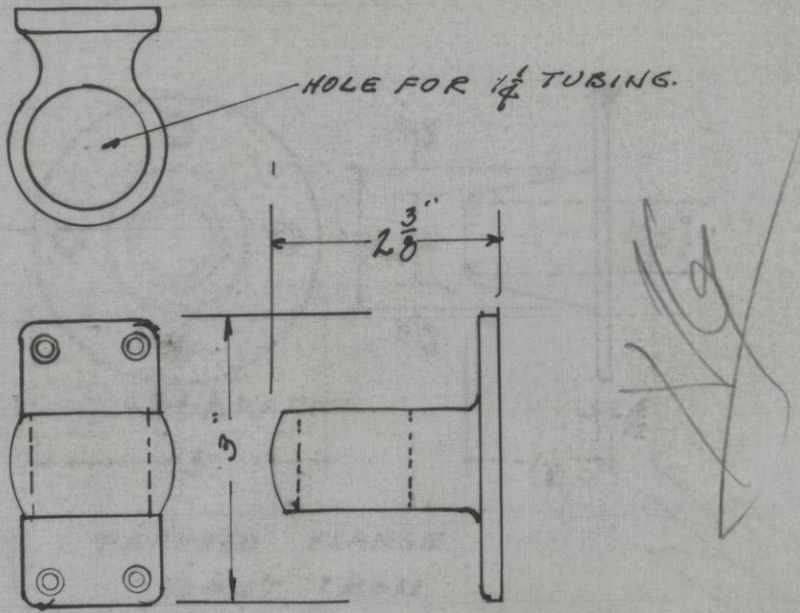

DATE-

LEG SOCKET FOR BEDSIDE TABLE

SEE B. P. NO. 27536-C PATTERN NO. 1270

HAMILTON MFG. CO.

DO NOT REMOVE THIS LEAF FROM BOOK

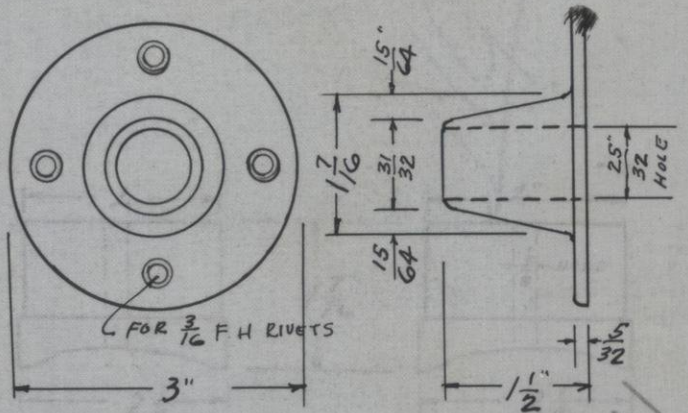

TAPERED FLANGE
CAST IRON

DATE- 10-12-32

SEE B. P. NO. 27595

PATTERN NO. 1267

HAMILTON MFG. CO.

DO NOT REMOVE THIS LEAF FROM BOOK

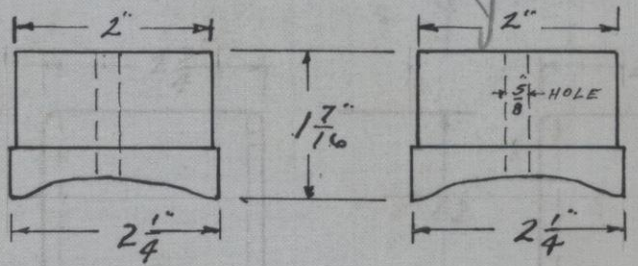

SUPPT. FOR ADJ. SHOE

DATE- 9-2-32

SEE B. P. NO. 0017620-5A

PATTERN NO. 1265

HAMILTON MFG. CO.

DO NOT REMOVE THIS LEAF FROM BOOK

DATE- 9-21-32

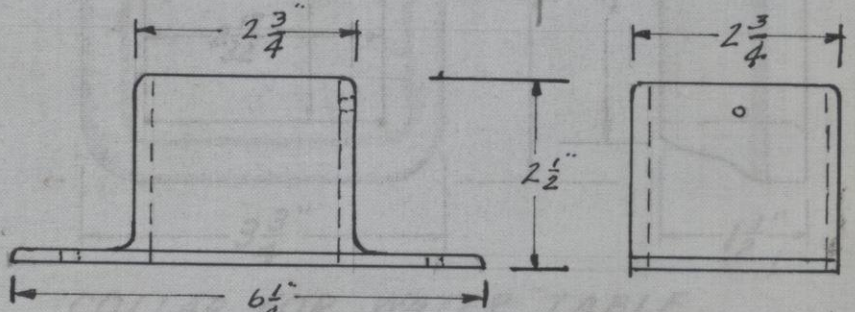

SHOE FOR 2 1/4" LEG

SEE B. P. NO. 0017620-3

PATTERN NO. 1264

5/10#

HAMILTON MFG. CO.

DO NOT REMOVE THIS LEAF FROM BOOK

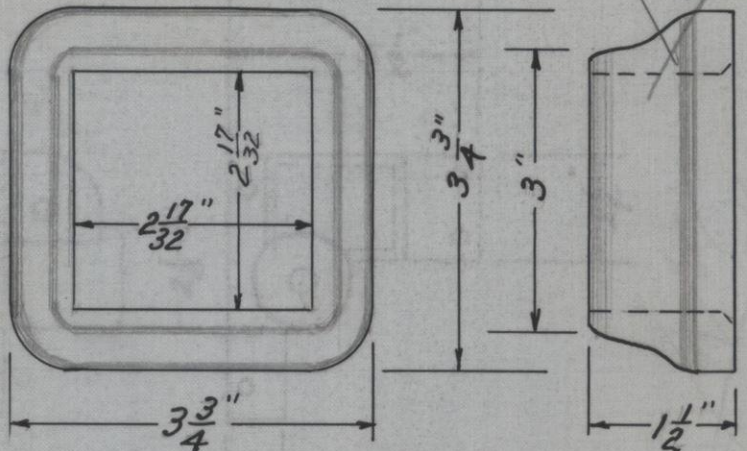

COLLAR FOR WATER TABLE
(STAINLESS STEEL CASTING)

SEE B. P. NO. 0017580-B PATTERN NO. 1263

CR DATE- 9-15-32

HAMILTON MFG. CO.

DO NOT REMOVE THIS LEAF FROM BOOK

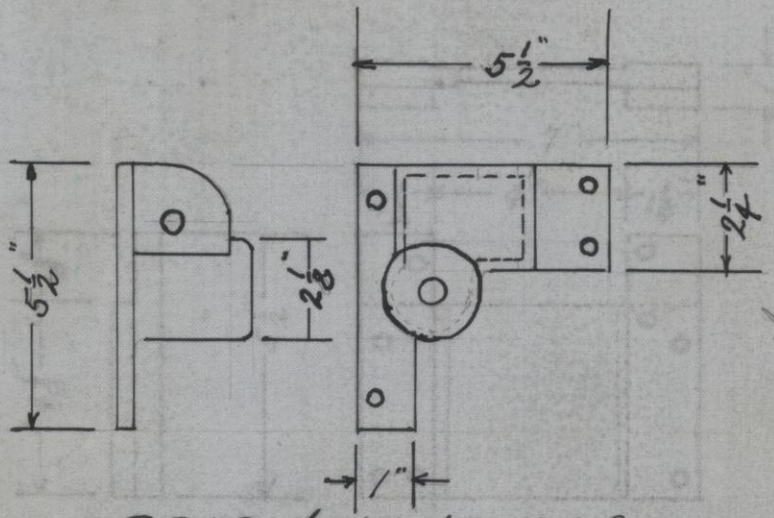

DATE-

GEAR HOUSING FOR
9470 ELEC. TABLE

SEE B. P. NO. 9470-R.W. PATTERN NO. 1262.

HAMILTON MFG. CO.

DO NOT REMOVE THIS LEAF FROM BOOK

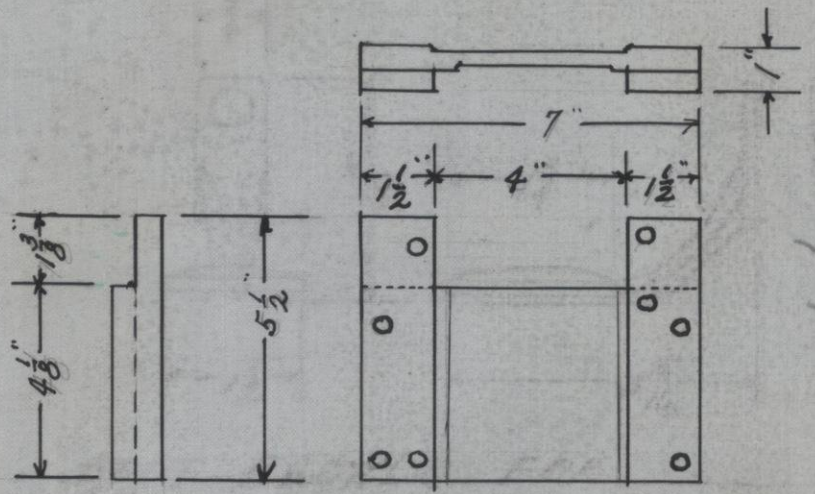

DATE-

CASTING FOR SLIDING STANDARDS FOR 9470 ELEC. TABLE 1 PAIR REQ'D.

SEE B. P. NO. 9470-R.W. PATTERN NO. 1261

HAMILTON MFG. CO.

DO NOT REMOVE THIS LEAF FROM BOOK

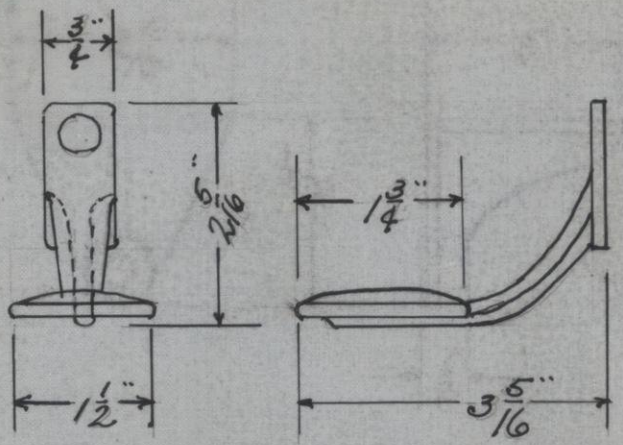

DATE-

FOOT PEDALS FOR
#9470 ELEC. TABLE 2 REQ'D.

SEE B. P. NO. 9470-EW. PATTERN NO. 1260

HAMILTON MFG. CO.

DO NOT REMOVE THIS LEAF FROM BOOK

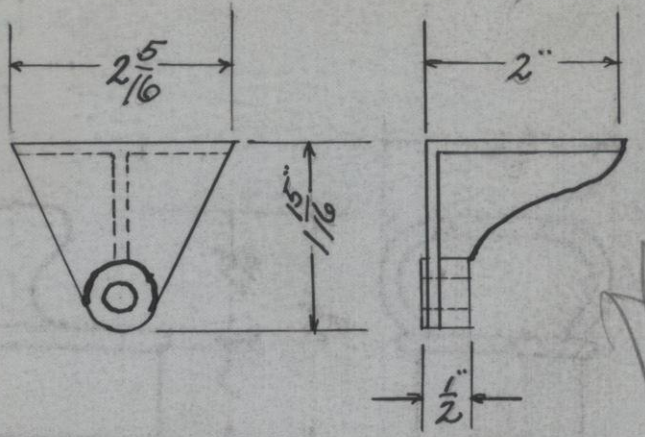

FOOT LEVER BRACKET
FOR 9470 ELEC. TABLE
1 REQ'D

DATE-

SEE B. P. NO. 9470-E.W. PATTERN NO. 1259

HAMILTON MFG. CO.

DO NOT REMOVE THIS LEAF FROM BOOK

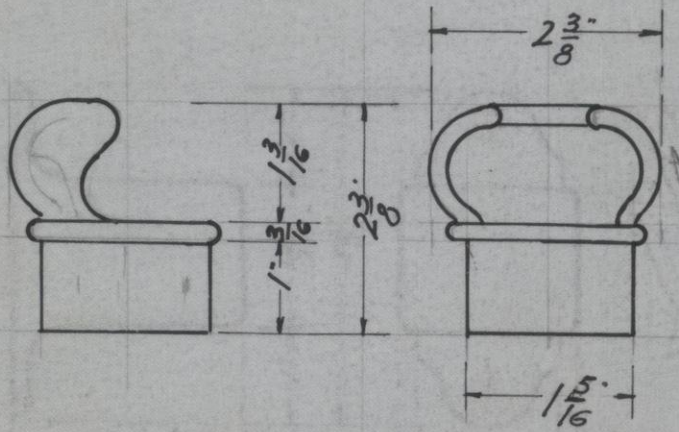

NG

DATE-

CLAMP SOCKET & BUSHING

SEE B. P. NO. 27536-A

PATTERN NO. 1258

HAMILTON MFG. CO.

DO NOT REMOVE THIS LEAF FROM BOOK

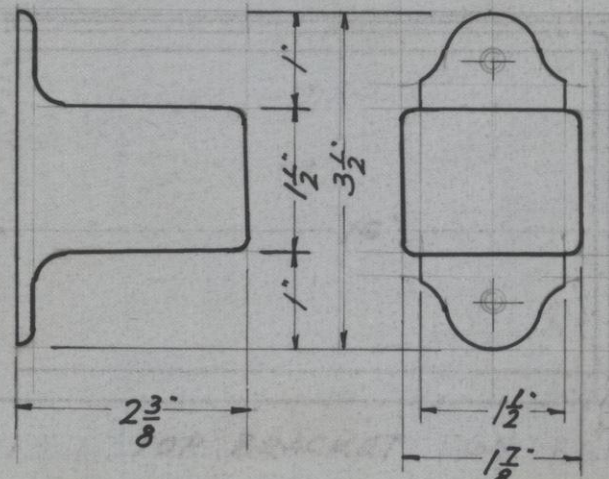

SOCKET FOR 1½" O.D. TUBING

DATE-

SEE B. P. NO. 27536-A

PATTERN NO. 1257

HAMILTON MFG. CO.

DO NOT REMOVE THIS LEAF FROM BOOK

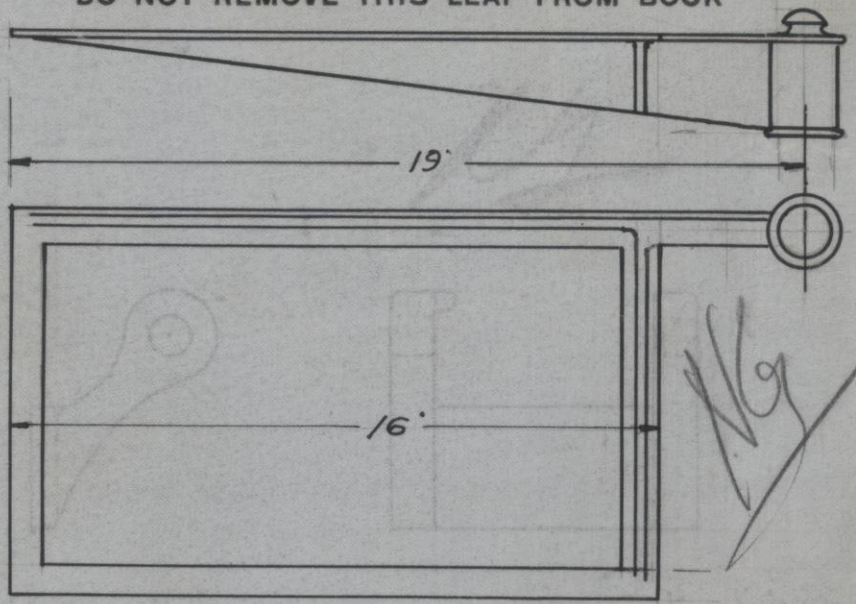

DATE-

TOP BRACKET FOR BEDSIDE TABLE

SEE B. P. NO. 27536-A

PATTERN NO. 1256

3

HAMILTON MFG. CO.

DO NOT REMOVE THIS LEAF FROM BOOK

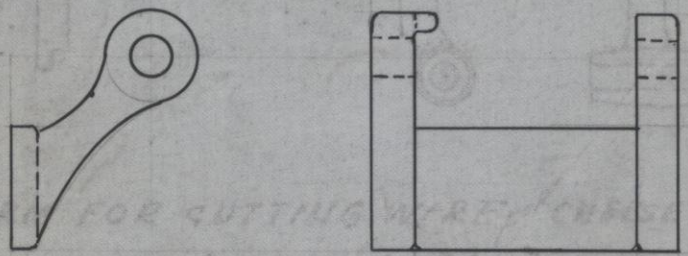

DATE-

BEARING FOR CUTTER ARM

SEE B. P. NO.

PATTERN NO. 1248

NO. WORKING DRWG MADE

HAMILTON MFG. CO.

DO NOT REMOVE THIS LEAF FROM BOOK

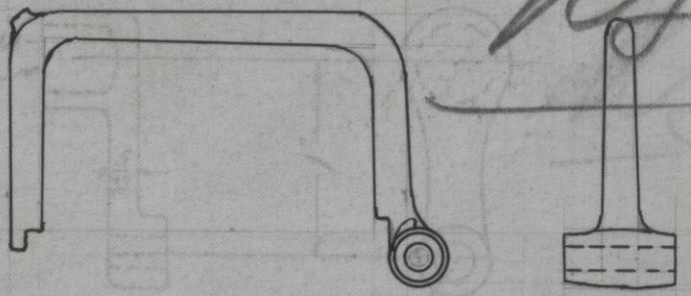

ARM FOR CUTTING WIRE for CHEESE COTTER

DATE-

SEE B. P. NO.

PATTERN NO. 1247

NO WORKING DRWG MADE

4

HAMILTON MFG. CO.

DO NOT REMOVE THIS LEAF FROM BOOK

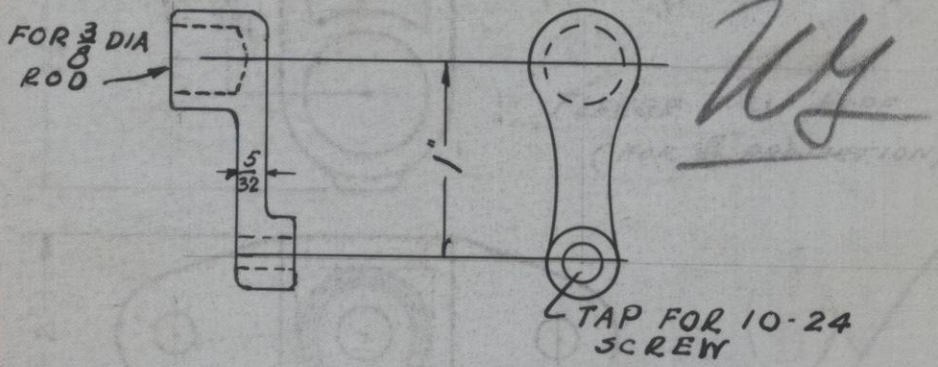

WY

CRANK HANDLE for CHEESE CUTTER

DATE-

SEE B. P. NO. BP

PATTERN NO. 1246

NO WORKING DRWG MADE

HAMILTON MFG. CO.

DO NOT REMOVE THIS LEAF FROM BOOK

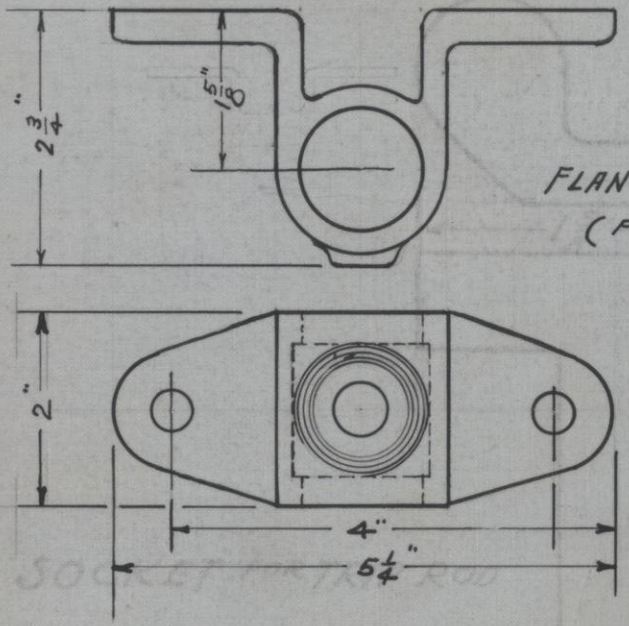

FLANGE FOR 1" PIPE
(FOR 15/16" PROJECTION)

DATE-

SEE B. P. NO. 564-C.

PATTERN NO. 1245.

HAMILTON MFG. CO.

DO NOT REMOVE THIS LEAF FROM BOOK

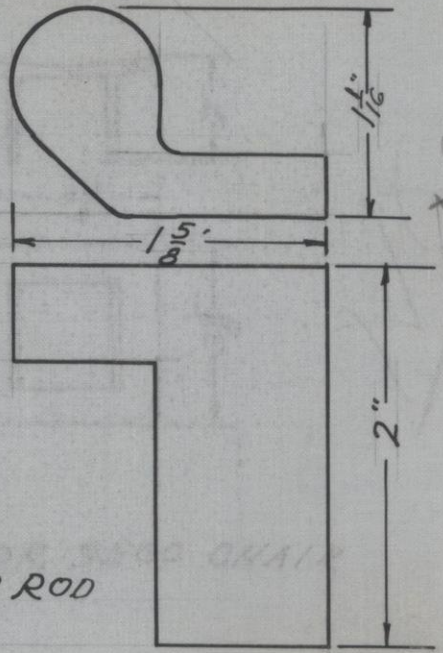

DATE-

SOCKET FOR TRIP ROD

SEE B. P. NO. 9500-L

PATTERN NO. 1230

HAMILTON MFG. CO.

DO NOT REMOVE THIS LEAF FROM BOOK

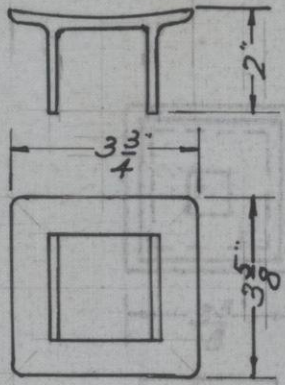

DATE-

BRACKET FOR 9500 CHAIR

SEE B. P. NO. 9500-L

PATTERN NO. 1229

HAMILTON MFG. CO.

DO NOT REMOVE THIS LEAF FROM BOOK

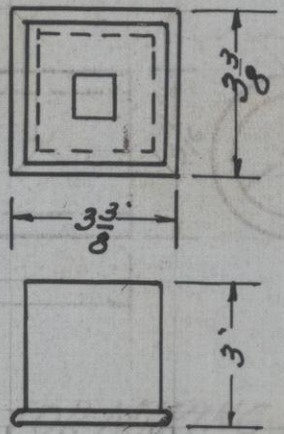

DATE-

LEG SOCKET

SEE B. P. NO. 566 C

PATTERN NO. 1228

HAMILTON MFG. CO.

DO NOT REMOVE THIS LEAF FROM BOOK

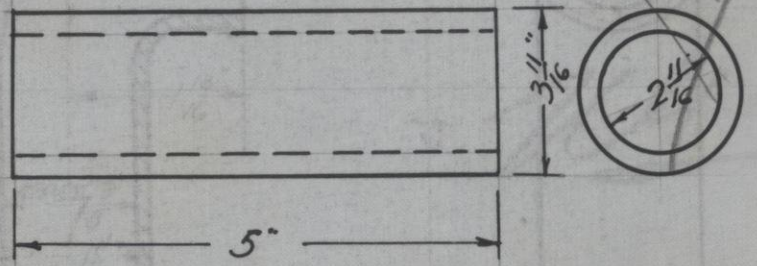

DATE-

BRONZE TUBE FOR MAKING RINGS
FOR CLOCK ON 9430 CAB'T.

SEE B. P. NO. 9430-RW PATTERN NO. 1227

HAMILTON MFG. CO.

DO NOT REMOVE THIS LEAF FROM BOOK

DATE- 3-4-32

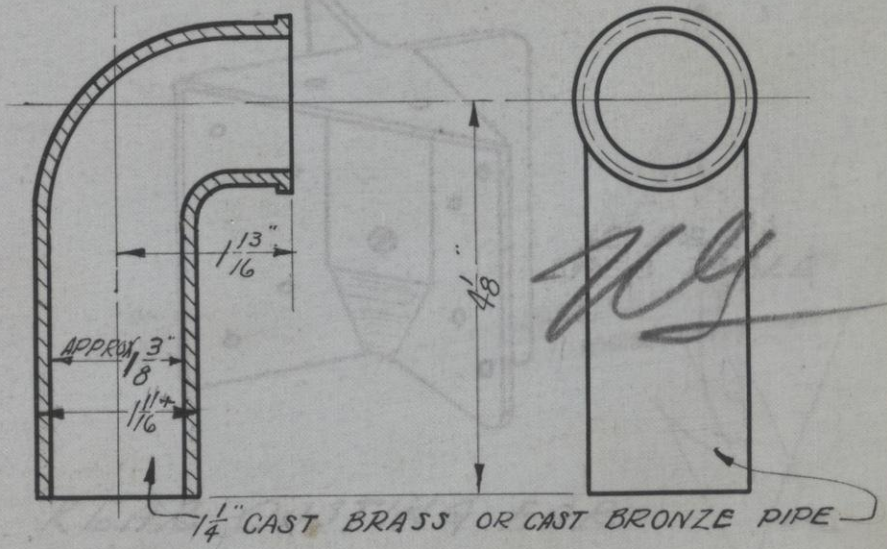

90° UNION ELBOW

SEE B. P. NO. 1334-M-2 PATTERN NO. 1222

HAMILTON MFG. CO.

DO NOT REMOVE THIS LEAF FROM BOOK

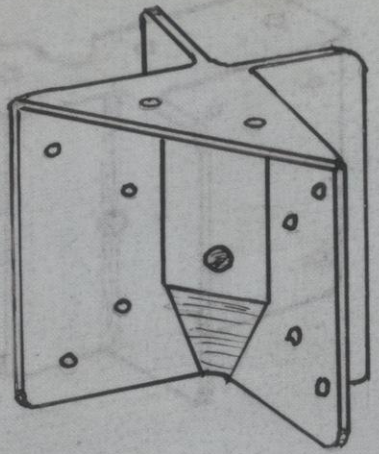

2 REQ'D PER TABLE

DATE-

REAR CASTING FOR DRAWING TABLE

SEE B. P. NO. 563-C — PATTERN NO. 1221

REF. 27286 - 27289

HAMILTON MFG. CO.

DO NOT REMOVE THIS LEAF FROM BOOK

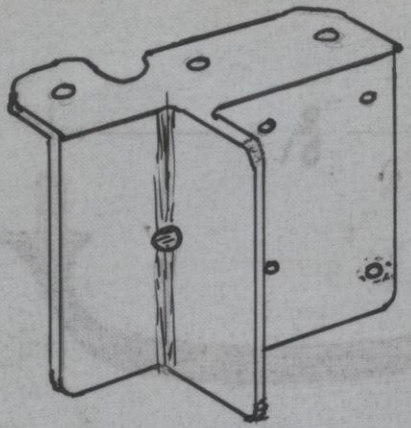

V 16

DATE-

R. & L. FRONT CASTINGS
FOR DRAWING TABLE

SEE B. P. NO. 562-C PATTERN NO. 1220

REF B.P. 27286 - 27289

HAMILTON MFG. CO.

DO NOT REMOVE THIS LEAF FROM BOOK

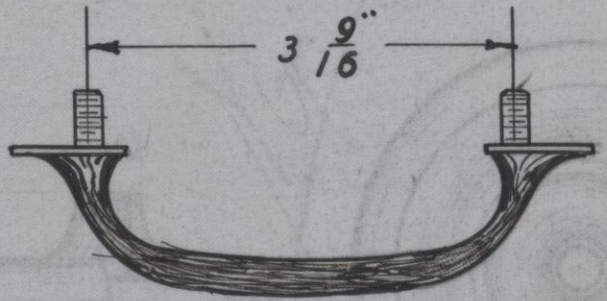

DRAWER PULL NO. K 1051

(MONEL METAL ONLY)

DATE-

SEE B. P. NO. 0016482 PATTERN NO. 1219

6

HAMILTON MFG. CO.

DO NOT REMOVE THIS LEAF FROM BOOK

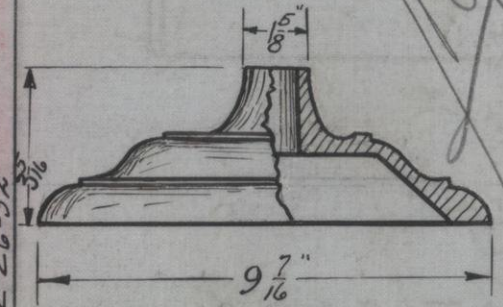



TOP VIEW

C.I. BASE FOR NO. 1275 WASTE RECEIVER

SEE B. P. NO. 1275

PATTERN NO. 1218

DATE- 2-26-32

HAMILTON MFG. CO.

DO NOT REMOVE THIS LEAF FROM BOOK

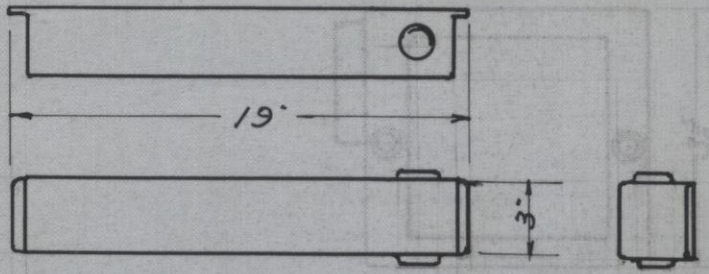

DATE- 12. 28. '31

SOAP TANK

SEE B. P. NO. 1334-M PATTERN NO. 1215

HAMILTON MFG. CO.

DO NOT REMOVE THIS LEAF FROM BOOK

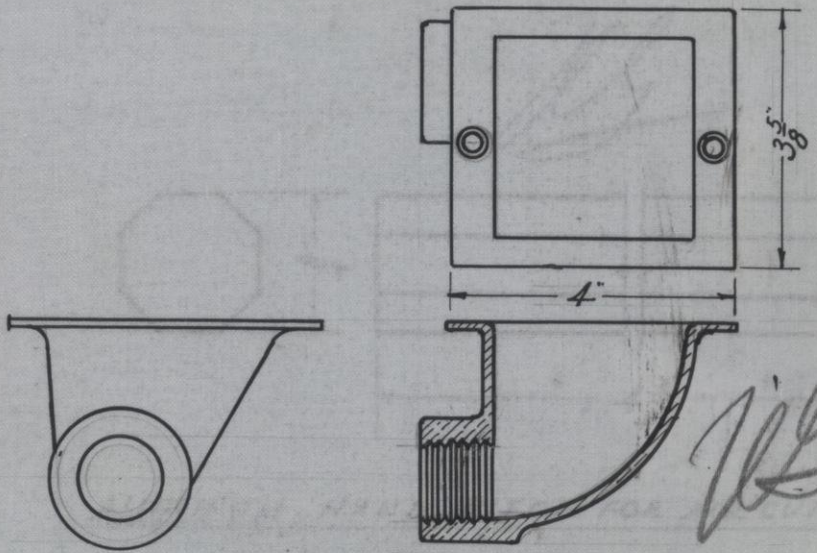

DATE- 12-28-'31.

FUNNEL FOR SOAP TANK

SEE B. P. NO. 1334-M

PATTERN NO. 1214

HAMILTON MFG. CO.

DO NOT REMOVE THIS LEAF FROM BOOK

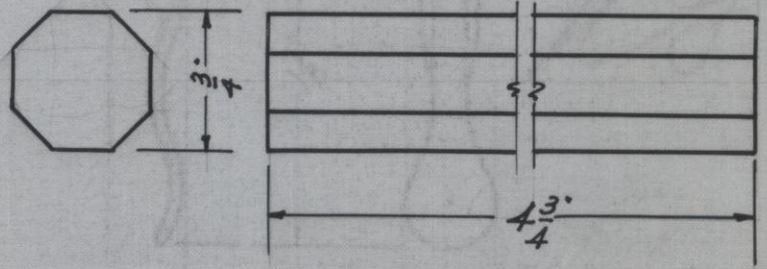

ALUMINUM HAND PIECE FOR AIR CUT-OFF

DATE-

SEE B. P. NO. 1335M-17 PATTERN NO. 1213

HAMILTON MFG. CO.

DO NOT REMOVE THIS LEAF FROM BOOK

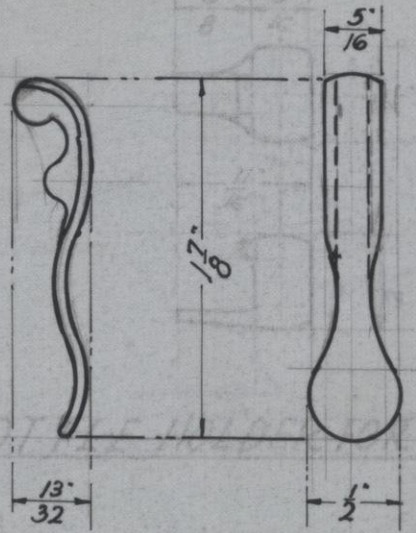

KG

DATE-NOV. 27-31.

LEVER FOR CUT-OFF VALVE

SEE B. P. NO. 1335M-17 PATTERN NO. 1212

HAMILTON MFG. CO.

DO NOT REMOVE THIS LEAF FROM BOOK

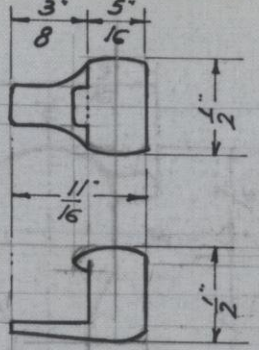

WG

BOTTLE HOLDER FOR AIR CUT-OFF

DATE-NOV. 27.'31.

SEE B. P. NO. 1335 M-17 PATTERN NO. 1211

HAMILTON MFG. CO.

DO NOT REMOVE THIS LEAF FROM BOOK

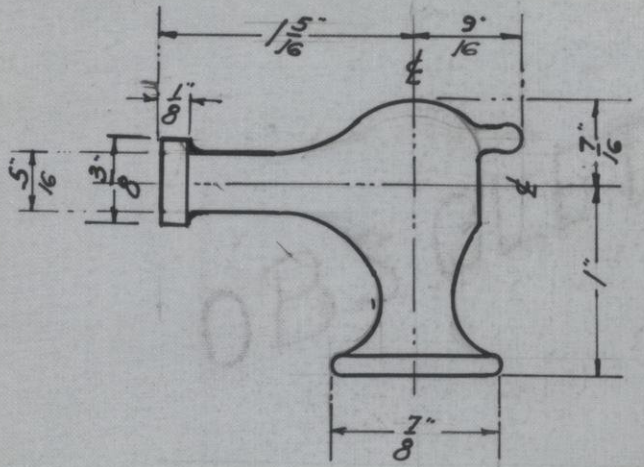

NG

DATE - NOV. 27. '31

HEAD FOR CUT-OFF VALVE

SEE B. P. NO. 1335 M-17 PATTERN NO. 1210

HAMILTON MFG. CO.

DO NOT REMOVE THIS LEAF FROM BOOK

OBSOLETE

DATE-

SEE B. P. NO.

PATTERN NO. 1209

HAMILTON MFG. CO.

DO NOT REMOVE THIS LEAF FROM BOOK

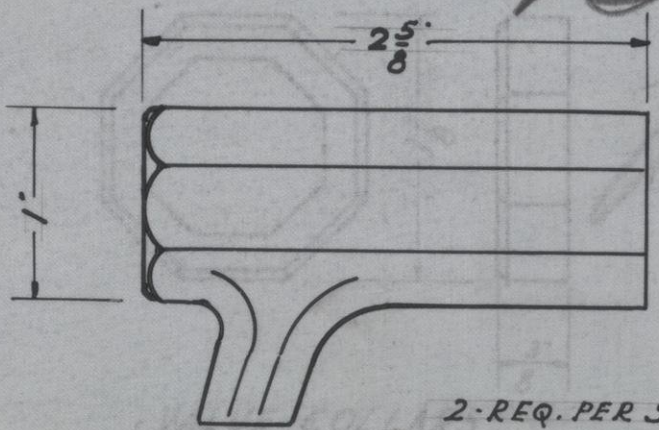

2-REQ. PER SET.

VALVE BODY

DATE- 11.10.31. A.D.

SEE B. P. NO. 1330M-18 PATTERN NO. 1207

HAMILTON MFG. CO.

DO NOT REMOVE THIS LEAF FROM BOOK

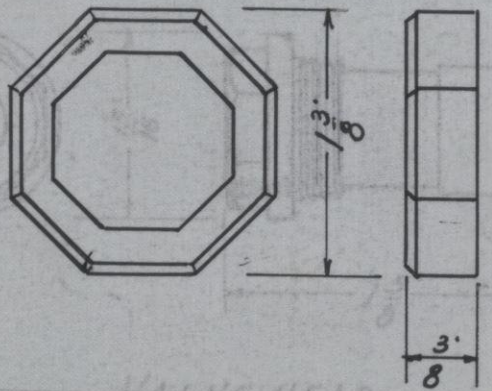

DATE- 11:10:31 A.D.

VALVE COLLARS

2 - REQ. PER SET.

SEE B. P. NO. 1330 M-26 PATTERN NO. 1206

HAMILTON MFG. CO.

DO NOT REMOVE THIS LEAF FROM BOOK

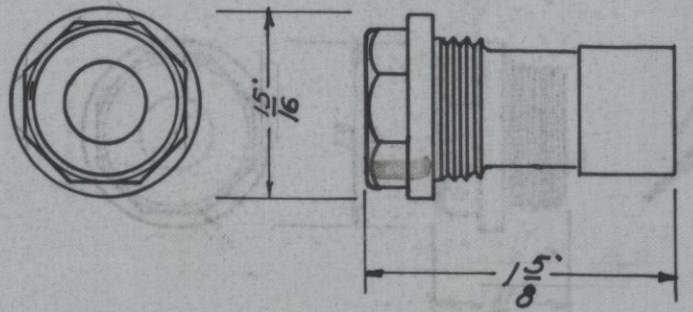

DATE-11-10.'31 A.D

VALVE HEAD

1-REQ. PER SET.

SEE B. P. NO. 1330M-26 PATTERN NO. 1205

HAMILTON MFG. CO.

DO NOT REMOVE THIS LEAF FROM BOOK

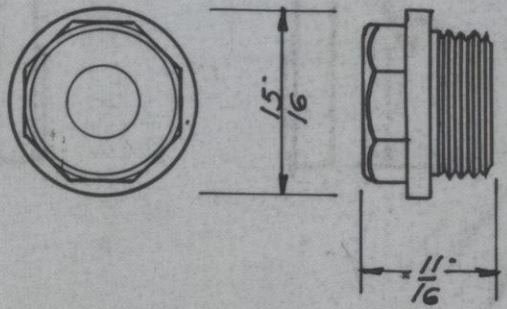

DATE-11.10.31 A.D

VALVE HEAD

1-REQ. PER SET.

SEE B. P. NO. 1330M-18

PATTERN NO. 1204

HAMILTON MFG. CO.

DO NOT REMOVE THIS LEAF FROM BOOK

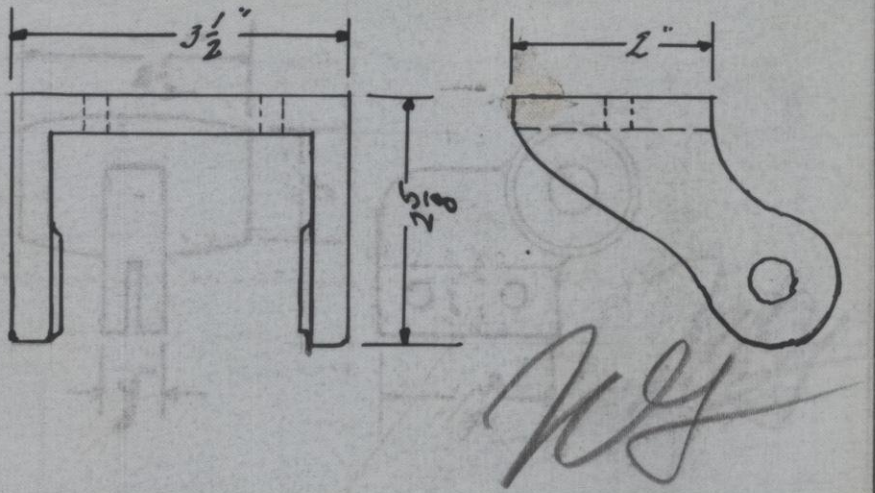

DATE-

LOWER KNIFE CASTING FOR CHEESE CUTTER ON B. P. NO. 0017445

SEE B. P. NO. 0017445-H. PATTERN NO. 1203

HAMILTON MFG. CO.

DO NOT REMOVE THIS LEAF FROM BOOK

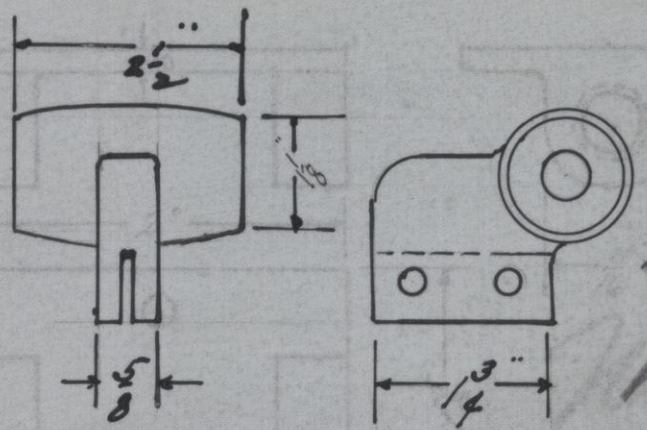

UPPER KNIFE CASTING
FOR CHEESE CUTTER ON B.P. 0017445.

DATE-

SEE B. P. NO. 0017445-H PATTERN NO. 1202

14

HAMILTON MFG. CO.

DO NOT REMOVE THIS LEAF FROM BOOK

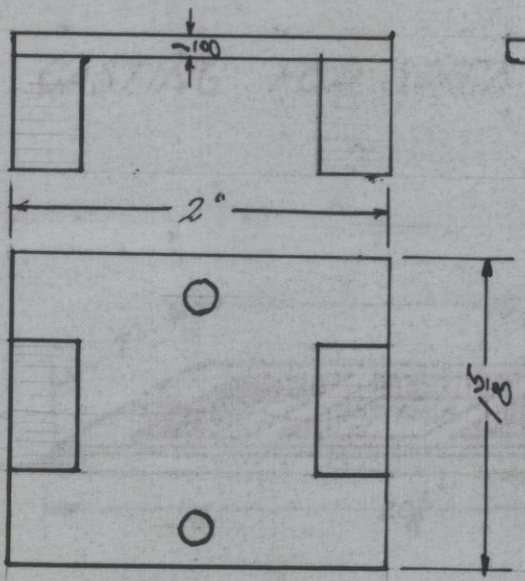

NG

CRANK CASTING FOR CHEESE CUTTER ON B.P. 0017445

DATE-

0018163-B

SEE B. P. NO. 0017445-G PATTERN NO. 1201

HAMILTON MFG. CO.

DO NOT REMOVE THIS LEAF FROM BOOK

CASTING FOR SPACE COOLER CABT.

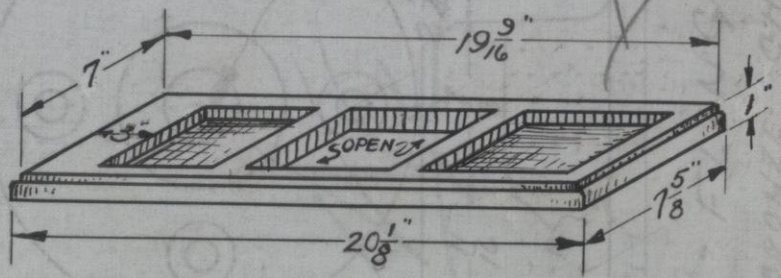

DATE- 11-9-31

SEE B. P. NO. 561-C

PATTERN NO. 1199

HAMILTON MFG. CO.

DO NOT REMOVE THIS LEAF FROM BOOK

DRILL & C'TSK. FOR 1"-NO. 10-OVAL HD. STAINLESS STEEL WOOD SCREWS.

DRILL & TAP FOR 3/8" OR 1/2"-ROD AS SPECIFIED.

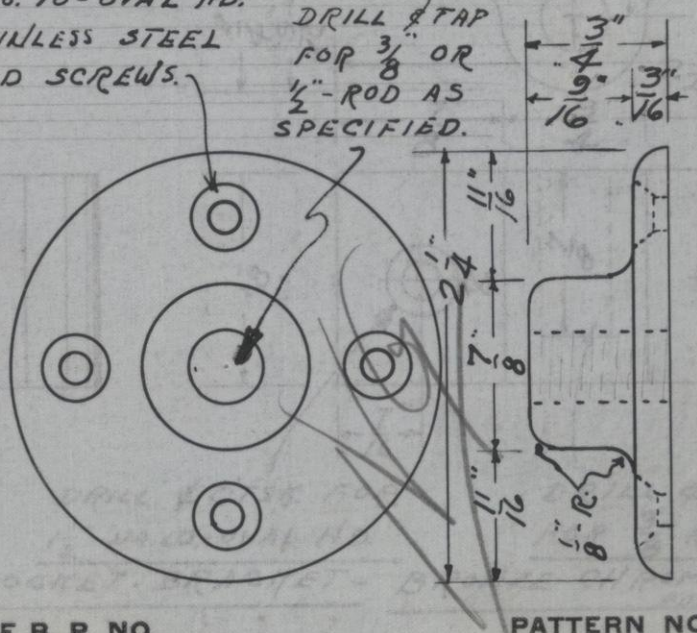

DATE- 8-20-31. J.B.

- FLANGE -
BRONZE- CHROMIUM-PLATED - POLISHED.

SEE B. P. NO. 0017237

PATTERN NO. 1195

HAMILTON MFG. CO.

DO NOT REMOVE THIS LEAF FROM BOOK

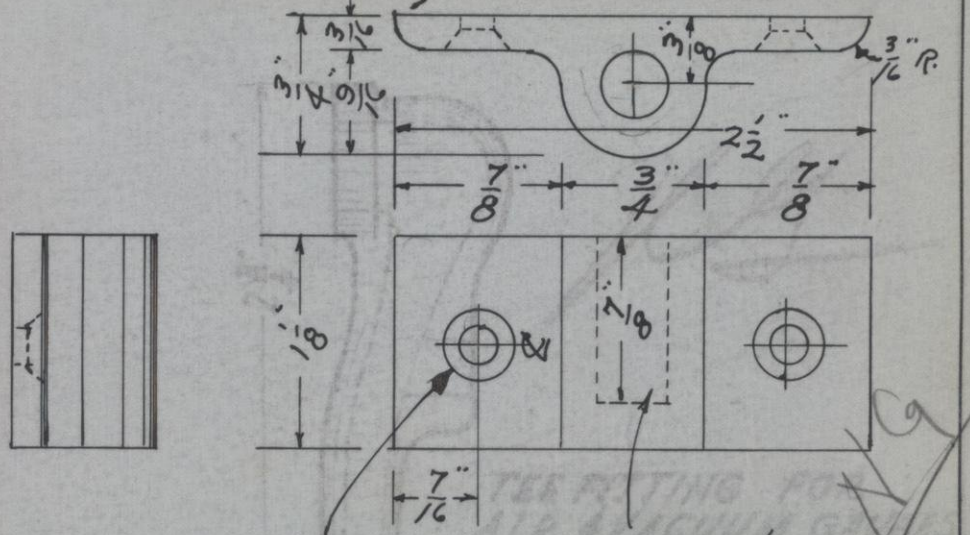

DRILL & C'SK. FOR 1½"-NO. 10.-OVAL HD.

DRILL & TAP FOR ⅜" ROD.

SOCKET-BRACKET-BRONZE-CHROM.-PLATED POLISHED.

DATE- 8-19-31. F. B.

SEE B. P. NO. 0017237

PATTERN NO. 1194

14

HAMILTON MFG. CO.

DO NOT REMOVE THIS LEAF FROM BOOK

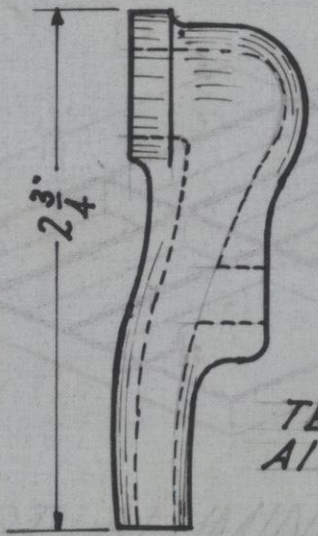

TEE FITTING FOR AIR & VACUUM GAUGES

DATE-

SEE B. P. NO. 1335-M-8 PATTERN NO. 1193

14

HAMILTON MFG. CO.

DO NOT REMOVE THIS LEAF FROM BOOK

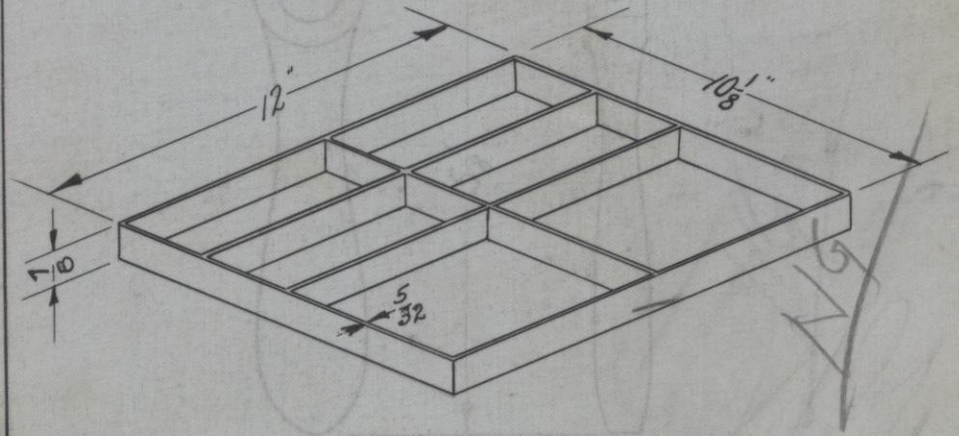

DATE- 8-6-31

CAST ALUMINUM TRAY

SEE B. P. NO. 0017193 PATTERN NO. 1190

14

HAMILTON MFG. CO.

DO NOT REMOVE THIS LEAF FROM BOOK

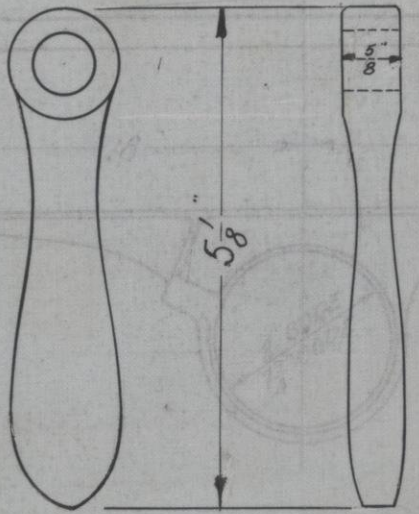

DATE- 8-10-31

HANDLE FOR DRAWING TABLE

SEE B. P. NO. 557-C

PATTERN NO. 1189

HAMILTON MFG. CO.

DO NOT REMOVE THIS LEAF FROM BOOK

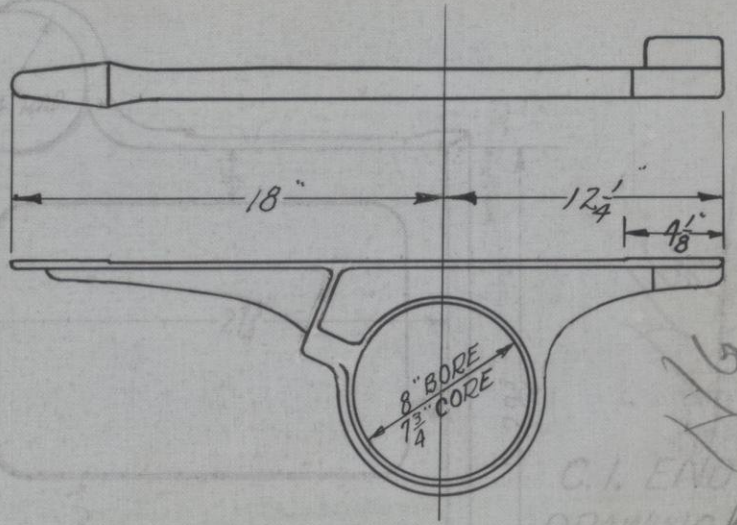

DATE 8-10-31

BRACKET FOR DRAWING TABLE

SEE B. P. NO. 557-C

PATTERN NO. 1188

14

HAMILTON MFG. CO.

DO NOT REMOVE THIS LEAF FROM BOOK

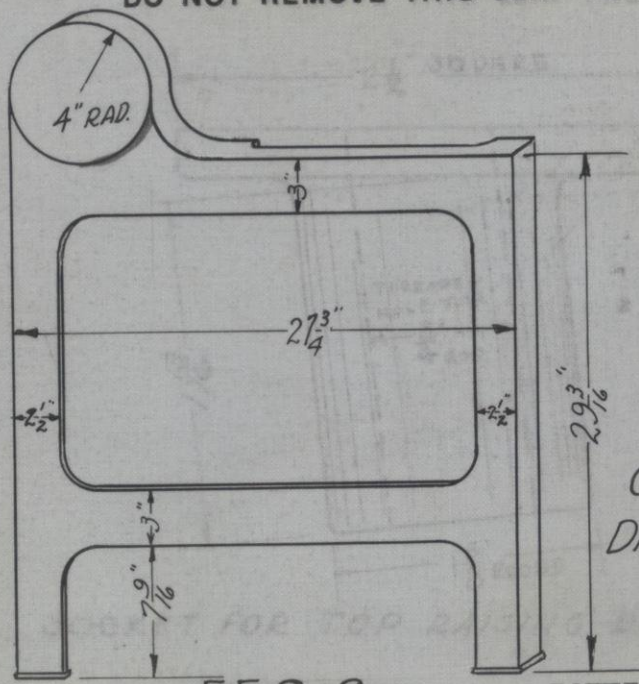

DATE- 8-10-31

C. I. END FOR DRAWING TABLE

SEE B. P. NO. 556-C

PATTERN NO. 1187-R&L

HAMILTON MFG. CO.

DO NOT REMOVE THIS LEAF FROM BOOK

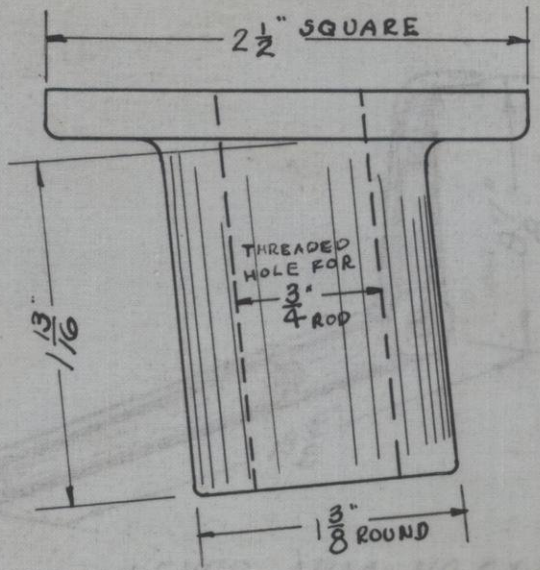

DATE-

SOCKET FOR TOP RAISING DEVICE

SEE B. P. NO. 0016340

PATTERN NO. 1186

14

HAMILTON MFG. CO.

DO NOT REMOVE THIS LEAF FROM BOOK

DATE- 10-13-31 LEB

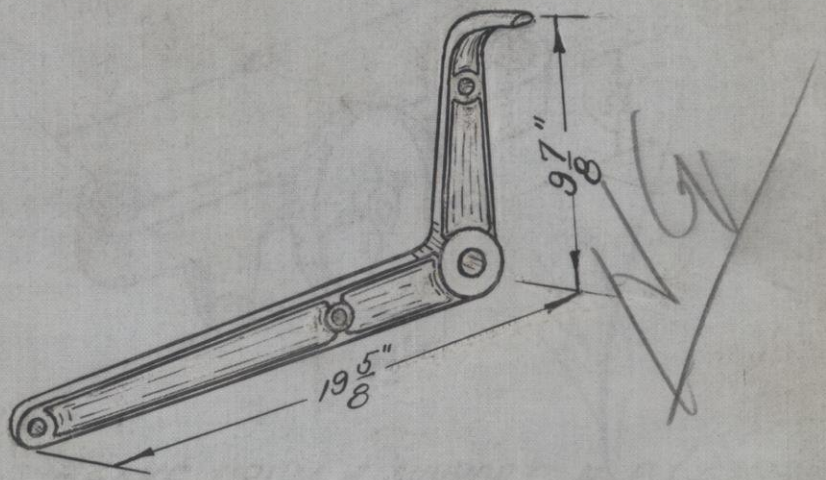

LEVER ARM NO. C1 PAT. No. 1185
RIGHT & LEFT

SEE B. P. NO. 15735 C-S PAT. NO. 1185

14

HAMILTON MFG. CO.

DO NOT REMOVE THIS LEAF FROM BOOK

DATE- 10-13-31 LCB.

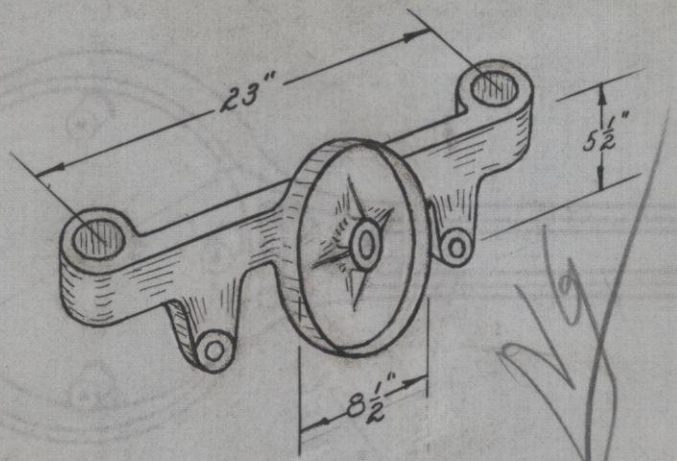

BRAKE DRUM & SUPPORT No. B1
PAT. NO. 1184 RIGHT & LEFT

SEE B. P. NO. 15735 B-S PAT. NO. 1184

14

HAMILTON MFG. CO.

DO NOT REMOVE THIS LEAF FROM BOOK

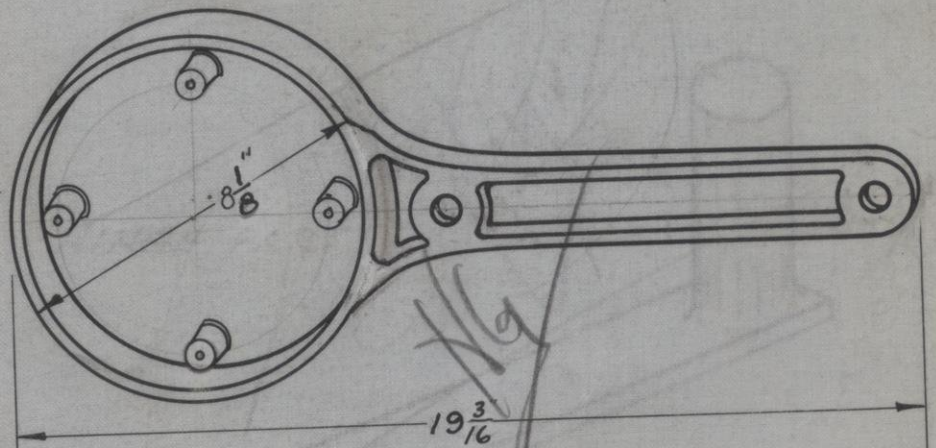

DATE- 9-17-31

ARM FOR NEW DESIGN NO. 461 TABLE

SEE B. P. NO. 0017376 PATTERN NO. 1183

REVISED EK 10-26-31

HAMILTON MFG. CO.

DO NOT REMOVE THIS LEAF FROM BOOK

HINGE PART

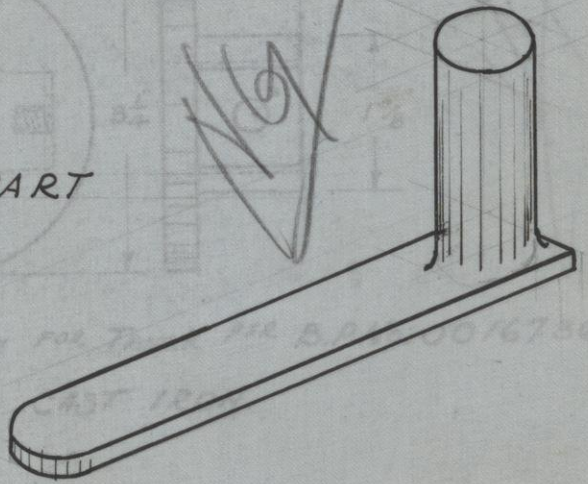

DATE-

SEE B. P. NO. 1330-M-14 PATTERN NO. 1181

HAMILTON MFG. CO.

DO NOT REMOVE THIS LEAF FROM BOOK

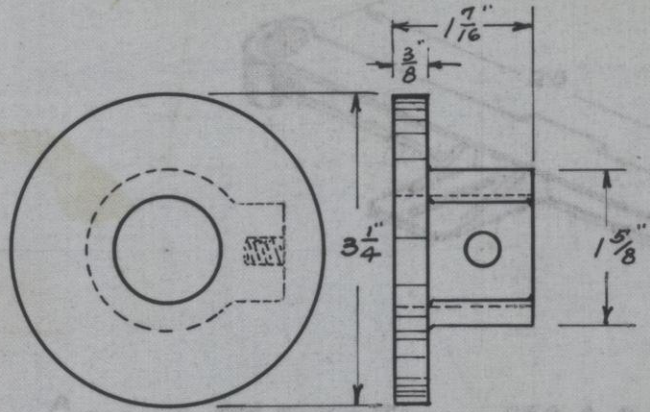

TOP FLANGE FOR TRUCK PER B.P.No. 0016736.

CAST IRON.

DATE-

SEE B. P. NO. 552-C PATTERN NO. 1179.

atm.

14

HAMILTON MFG. CO.

DO NOT REMOVE THIS LEAF FROM BOOK

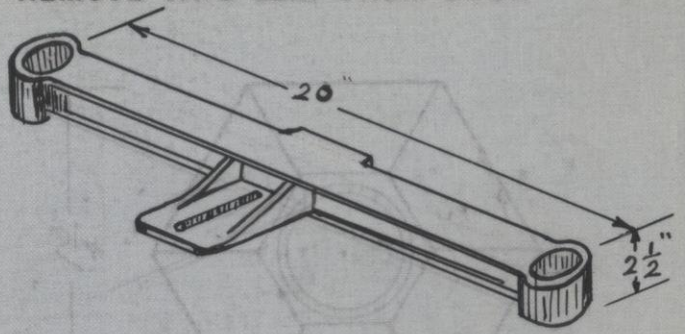

BEARING FOR FORM TRUCK PER B.P. No. 0016736

Cast Iron

DATE-

SEE B. P. NO. 550-C PATTERN NO. 1177.

14

HAMILTON MFG. CO.

DO NOT REMOVE THIS LEAF FROM BOOK

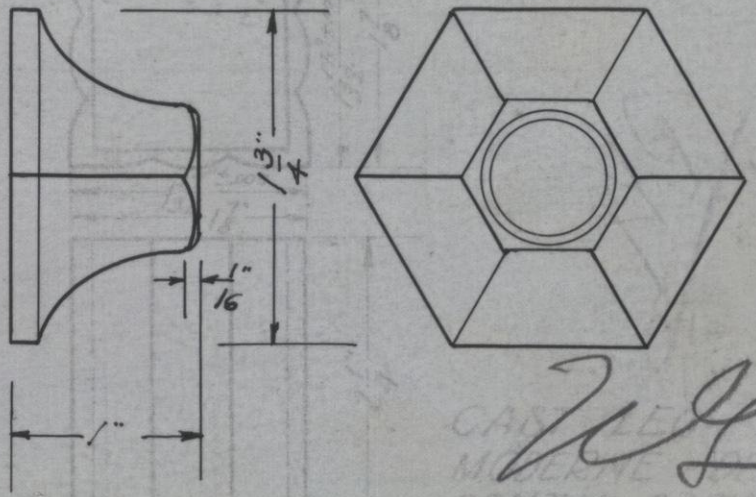

DATE-

ADJUSTABLE BACK PLATE
CAST BRASS

SEE B. P. NO. 1330-M-20 PATTERN NO. 1176

R.A.S. 8-28-31.

14

HAMILTON MFG. CO.

DO NOT REMOVE THIS LEAF FROM BOOK

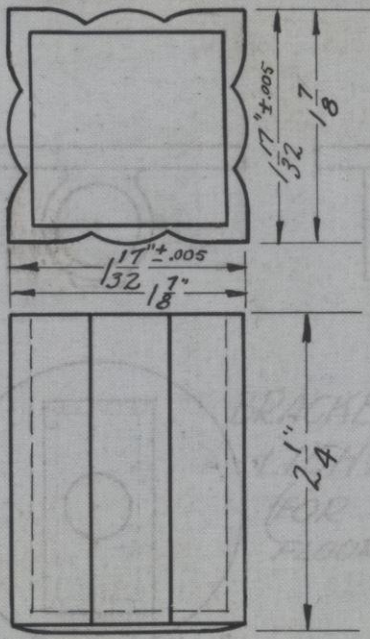

DATE- 4-7-31 S.O.K.

1/4

CAST LEG FOR MODERNE DESIGN DENTAL CABINET

SEE B. P. NO. 26593-A

PATTERN NO. 1175

HAMILTON MFG. CO.

DO NOT REMOVE THIS LEAF FROM BOOK

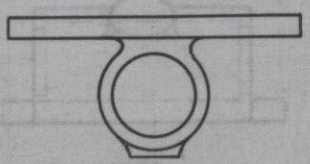

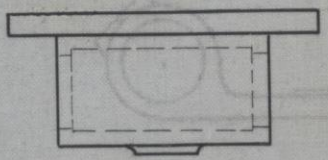

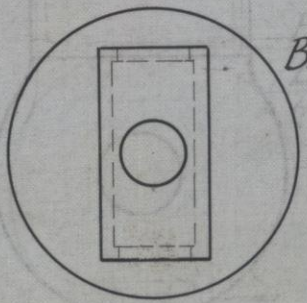

BRACKET FOR PHOTOGRAPHY LIGHT FIXTURES (FOR USE ON SECOND FLOOR IN OLD OFFICE)

DATE- 4-3-31

SEE B. P. NO. 549-C

PATTERN NO. 1174

HAMILTON MFG. CO.

DO NOT REMOVE THIS LEAF FROM BOOK

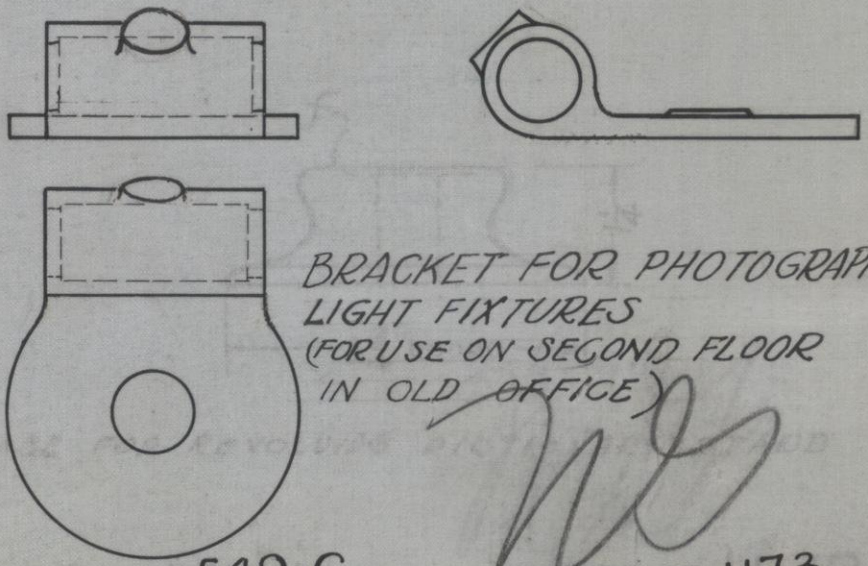

DATE. 4-3-31

BRACKET FOR PHOTOGRAPHY LIGHT FIXTURES (FOR USE ON SECOND FLOOR IN OLD OFFICE)

SEE B. P. NO. 549-C

PATTERN NO. 1173

HAMILTON MFG. CO.

DO NOT REMOVE THIS LEAF FROM BOOK

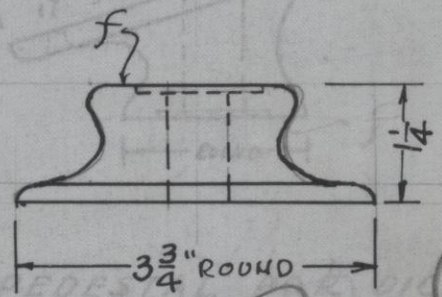

DATE-

BASE FOR REVOLVING DICTIONARY STAND

SEE B. P. NO. 26411

PATTERN NO. 1172

14

HAMILTON MFG. CO.

DO NOT REMOVE THIS LEAF FROM BOOK

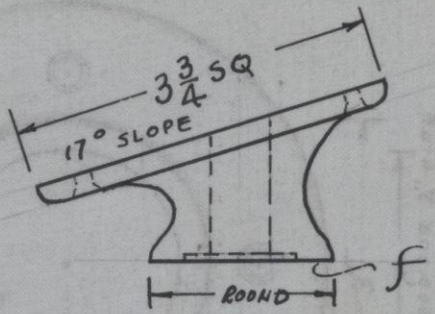

REVOLVING PEDESTAL FOR DICTIONARY STAND

DATE-

SEE B. P. NO. 26411

PATTERN NO. 1171

14

HAMILTON MFG. CO.

DO NOT REMOVE THIS LEAF FROM BOOK

DATE- 2-19-31 Y.B.

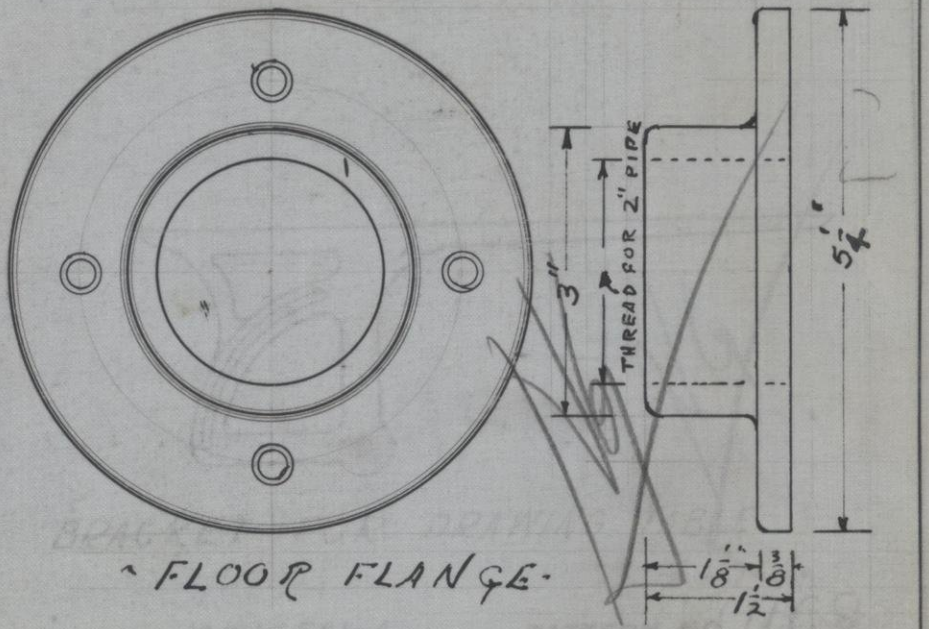

"FLOOR FLANGE"

SEE B. P. NO.
0016261

PATTERN NO.
1170

HAMILTON MFG. CO.

DO NOT REMOVE THIS LEAF FROM BOOK

DATE- K.G.S. 2-28-31

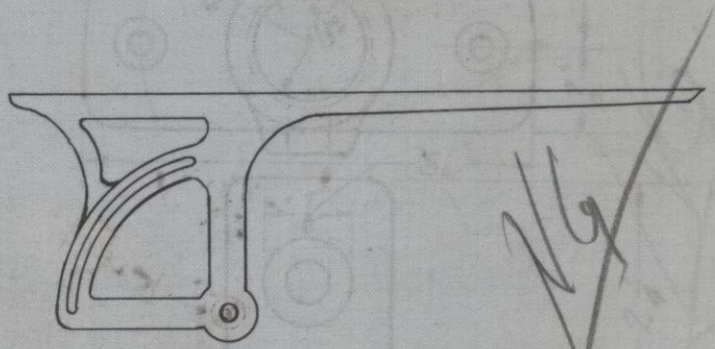

BRACKET FOR DRAWING TABLE

SEE B. P. NO. 0016561-A

PATTERN NO. 1169

HAMILTON MFG. CO.

DO NOT REMOVE THIS LEAF FROM BOOK

DATE- 2-27-31 - KJS

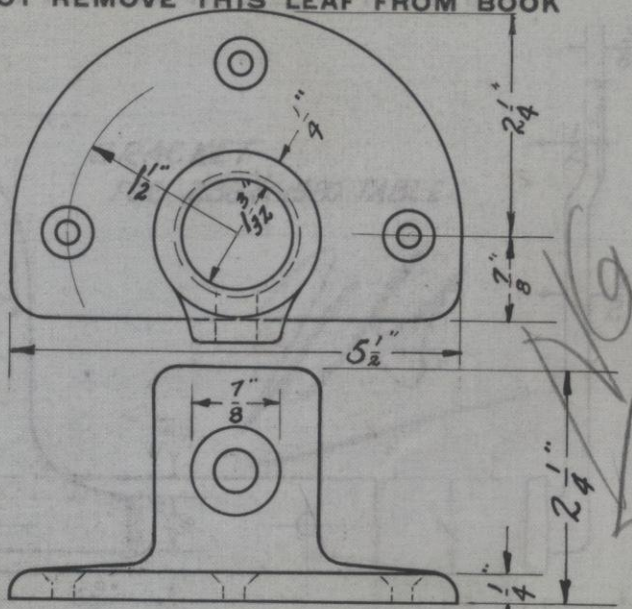

SOCKET FOR KELLY KURVE CAB'T.

SEE B. P. NO. 0015763C PATTERN NO. 1168

HAMILTON MFG. CO.

DO NOT REMOVE THIS LEAF FROM BOOK

DATE- SEE 11-3-30

1167

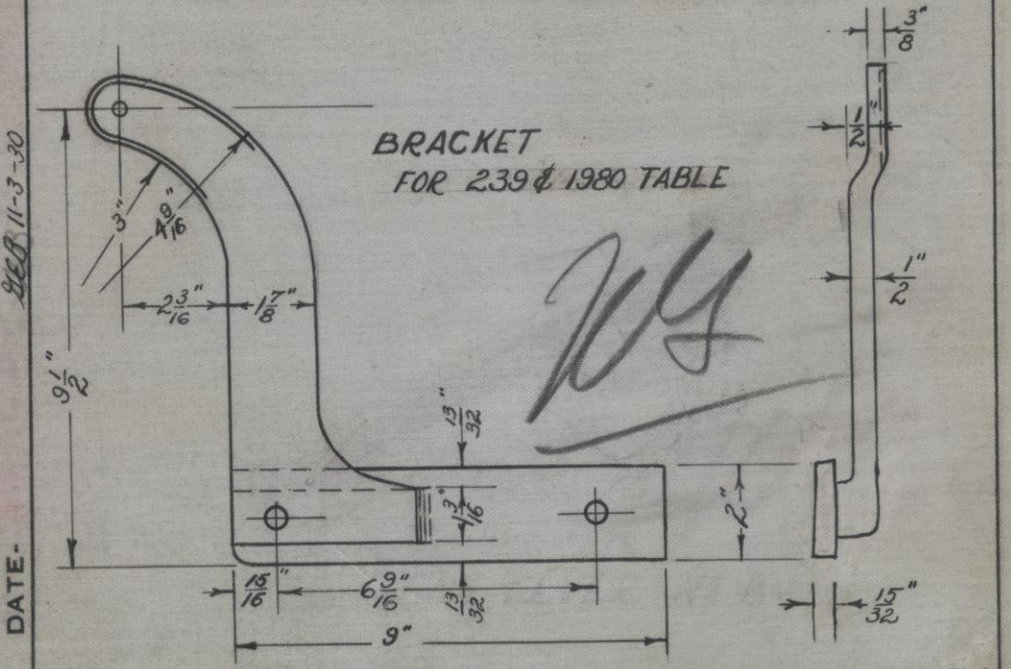

SEE B. P. NO. 1980-B W
DATED 10-27-30

PATTERN NO. 1167 R&L

WAS 1148

HAMILTON MFG. CO.

DO NOT REMOVE THIS LEAF FROM BOOK

DATE- REB 1-14-31

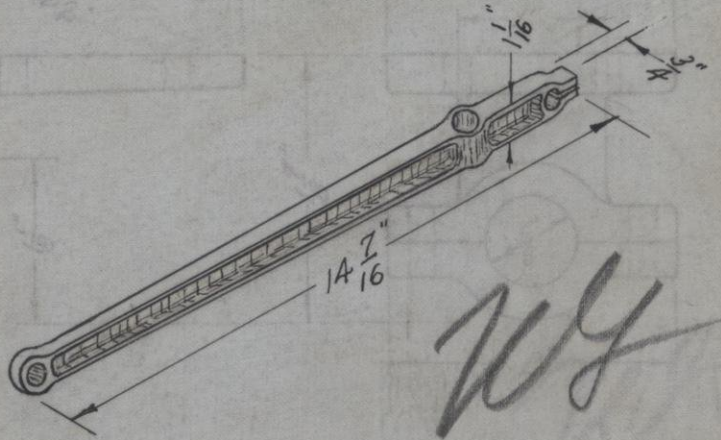

ADJUSTING LEVER No. B-3

SEE B. P. NO. 1980-B-S

PATTERN NO. 1166

HAMILTON MFG. CO.

DO NOT REMOVE THIS LEAF FROM BOOK

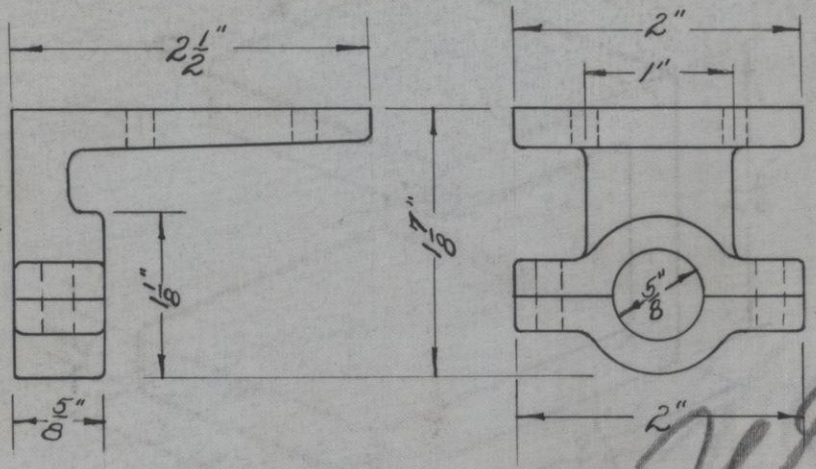

MALLEABLE IRON SPLIT BEARING
Nº B-2

SEE B. P. NO. 1980-B-S PATTERN NO. 1165

DATE- 1-13-30 G.E.B.

HAMILTON MFG. CO.

DO NOT REMOVE THIS LEAF FROM BOOK

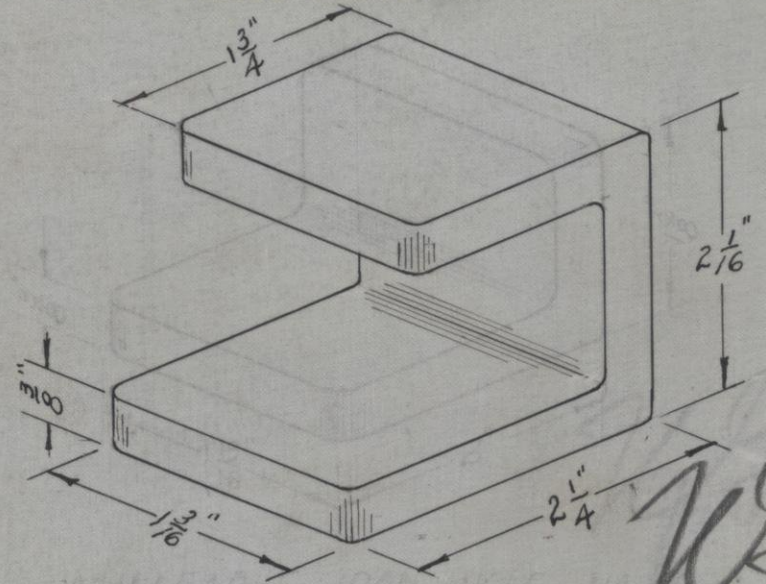

DATE-

MALLEABLE IRON NO. C-8

SEE B. P. NO. 1980-C-S PATTERN NO. 1164

HAMILTON MFG. CO.

DO NOT REMOVE THIS LEAF FROM BOOK

DATE- 1-14-31 Sept.

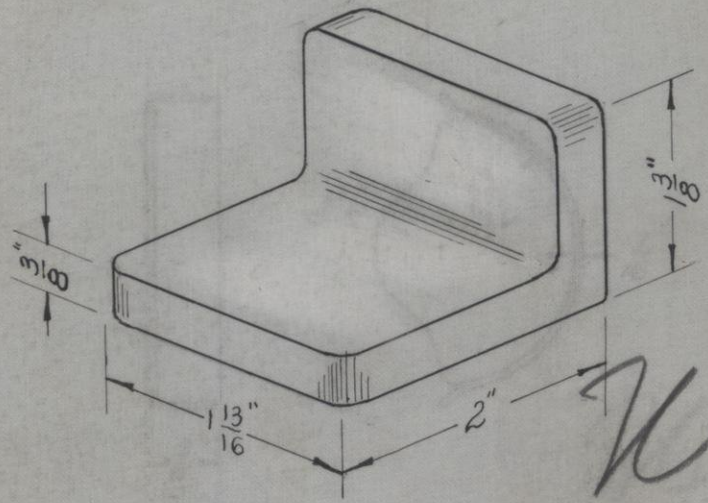

WG

MALLEABLE IRON ANGLE No. C9

SEE B. P. NO. 1980-C-S PATTERN NO. 1163

HAMILTON MFG. CO.

DO NOT REMOVE THIS LEAF FROM BOOK

DATE- Dec 3 1-14-31

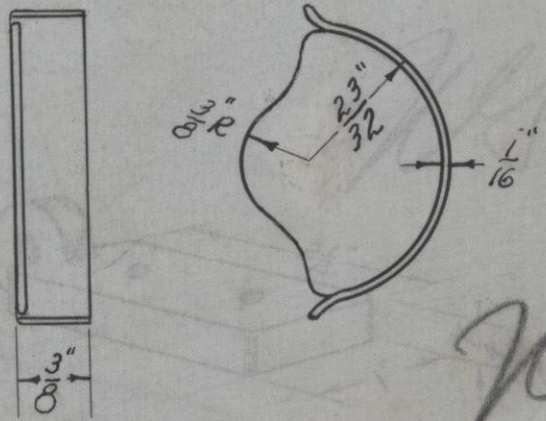

PULLEY GUARD No. C-7

SEE B. P. NO. 1980-C-S PATTERN NO. 1162

HAMILTON MFG. CO.

DO NOT REMOVE THIS LEAF FROM BOOK

DATE- 11-17-30 BEEB.

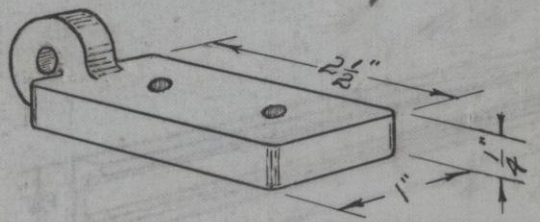

CABLE BRACKET FOR 1980 TABLE

SEE B. P. NO. 0016166-A PATTERN NO. 1156

HAMILTON MFG. CO.

DO NOT REMOVE THIS LEAF FROM BOOK

DATE- 11-18-30 LEG

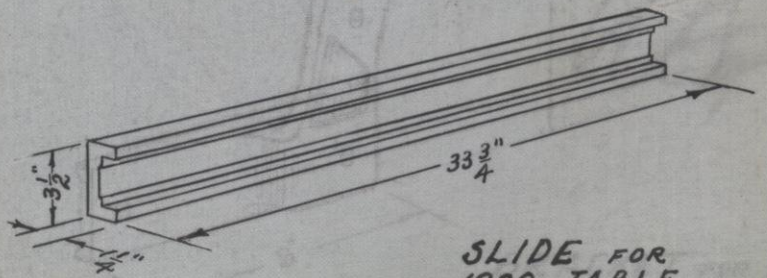

SLIDE FOR 1980 TABLE

SEE B. P. NO. 0016166-B

PATTERN NO. 1155

HAMILTON MFG. CO.

DO NOT REMOVE THIS LEAF FROM BOOK

DATE- 11-18-30 BGB

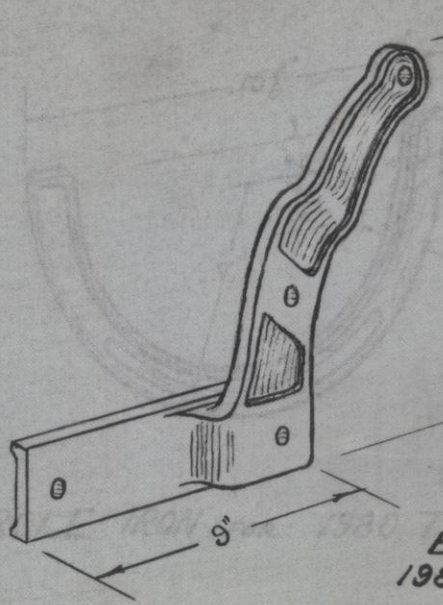

BRACKET FOR 1980 TABLE

SEE B. P. NO. 0016166

PATTERN NO. 1154 R&L

HAMILTON MFG. CO.

DO NOT REMOVE THIS LEAF FROM BOOK

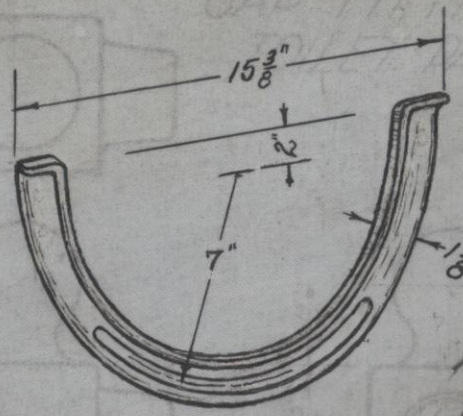

DATE- 11-18-30

CIRCLE IRON FOR 1980 TABLE

SEE B. P. NO. 0016166

PATTERN NO. 1153

14

HAMILTON MFG. CO.

DO NOT REMOVE THIS LEAF FROM BOOK

CAP FITTING FOR TOILET PARTITIONS

DATE- 11-12-30 60.84

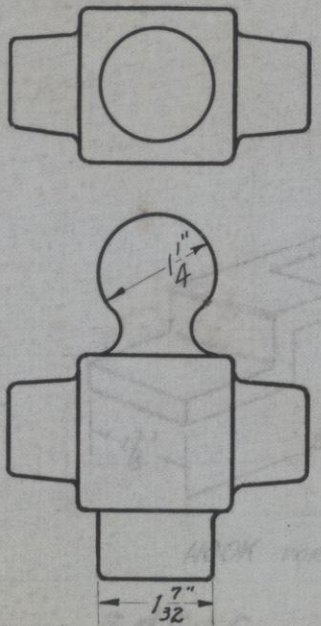

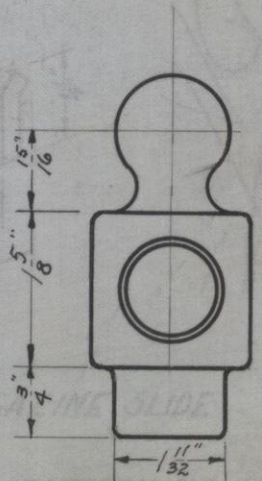

SEE B. P. NO. 0015971

PATTERN NO. 1152

HAMILTON MFG. CO.

DO NOT REMOVE THIS LEAF FROM BOOK

DATE- MAR 11-3-30

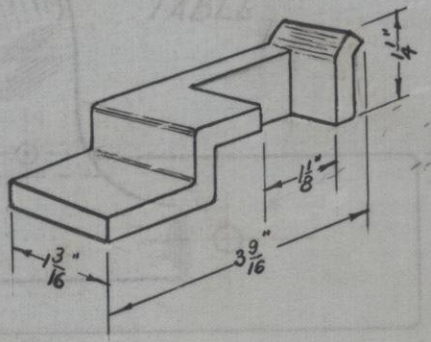

HOOK FOR MAGAZINE SLIDE

SEE B. P. NO. 546-C

PATTERN NO. 1151

HAMILTON MFG. CO.

DO NOT REMOVE THIS LEAF FROM BOOK

DATE- Jan 2, 1931 - H.E.B.

BRACKET
FOR 239 & 1980
TABLE

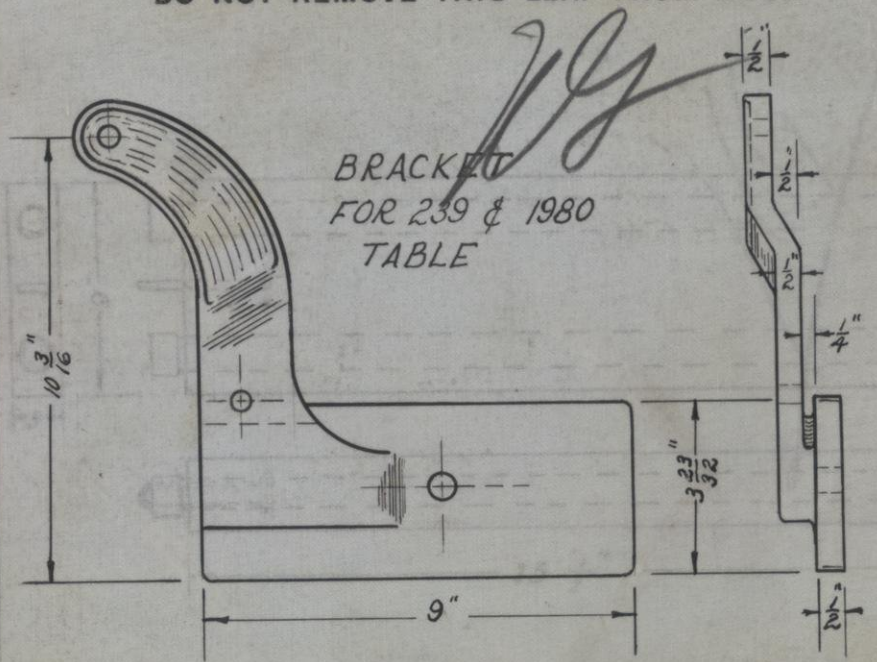

SEE B. P. NO. 1980-B-W

PATTERN NO. 1148 R&L

14

HAMILTON MFG. CO.

DO NOT REMOVE THIS LEAF FROM BOOK

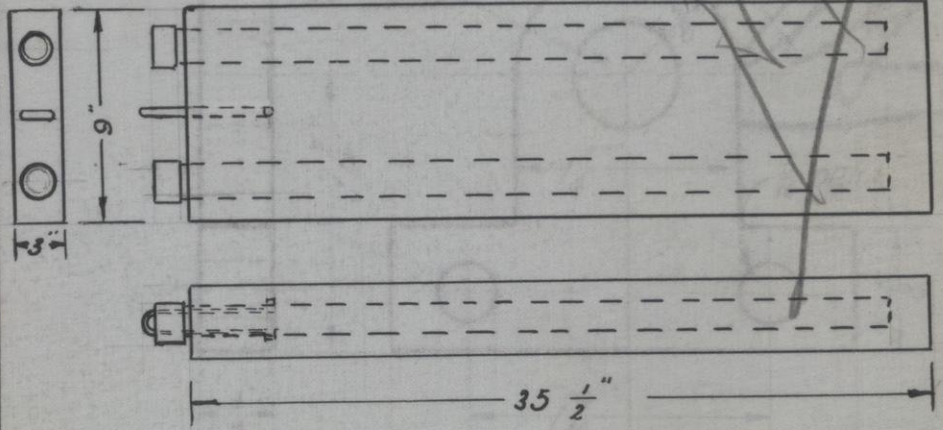

DATE-

SEE B. P. NO. 25976-B

PATTERN NO. 1146

HAMILTON MFG. CO.

DO NOT REMOVE THIS LEAF FROM BOOK

CAM BEARINGS FOR AUTO SHIFT TABLE

No. F-6

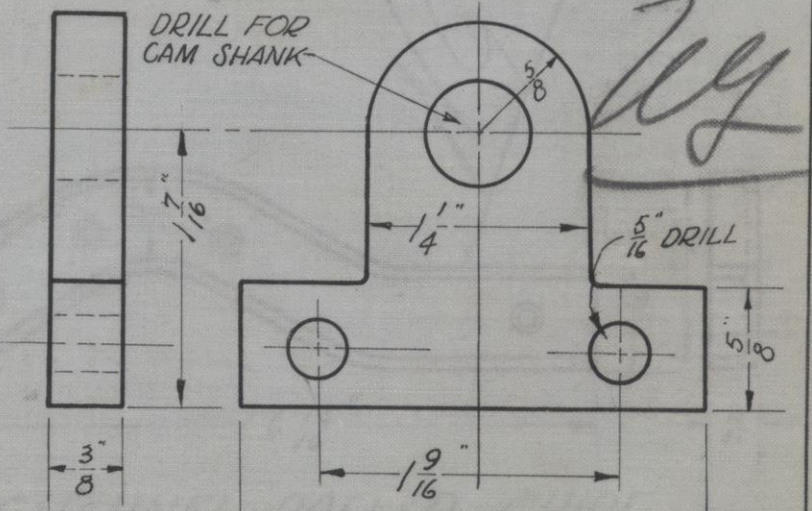

DATE- 10-22-30 Eff. N.

SEE B. P. NO. 461-F

PATTERN NO. 1145

HAMILTON MFG. CO.

DO NOT REMOVE THIS LEAF FROM BOOK

DATE- 12-23-30 A.f.S.

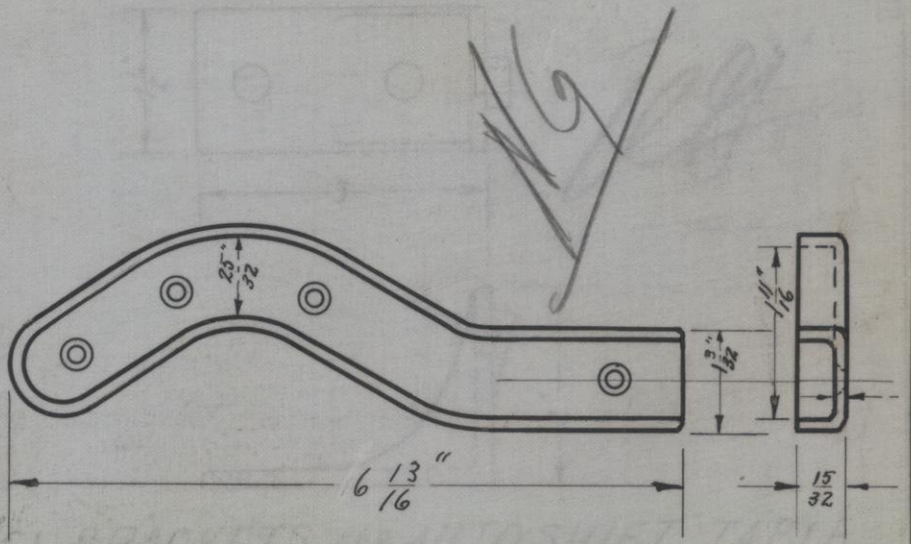

CHANNEL ROLLER GUIDE

SEE B. P. NO. 0016248 PATTERN NO. 1144

HAMILTON MFG. CO.

DO NOT REMOVE THIS LEAF FROM BOOK

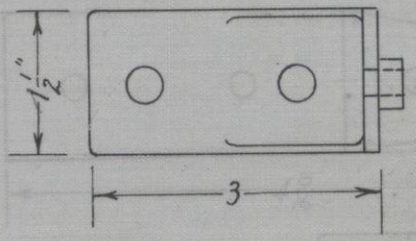

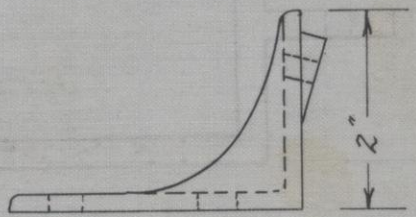

DATE- 9-10-30 K.G.S.

C.I. BRACKETS FOR AUTOSHIFT TABLE
No. 461 - B-4

SEE B. P. NO. 461-B

PATTERN NO. 1141

HAMILTON MFG. CO.

DO NOT REMOVE THIS LEAF FROM BOOK

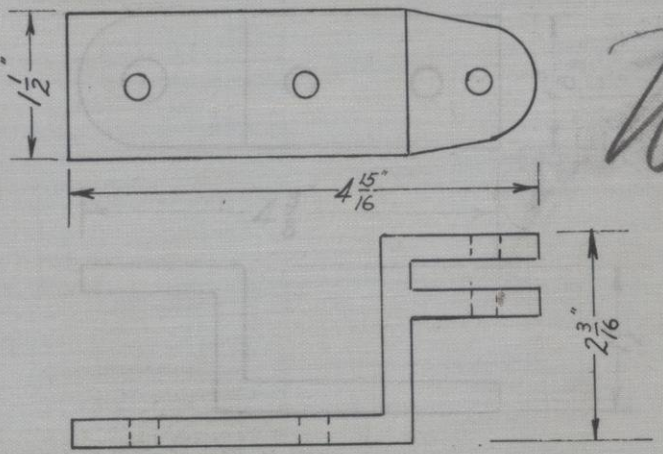

DATE- 9-10-30 K.G.S.

C1 BRACKETS FOR AUTOSHIFT TABLE
No. 461 - B-6

SEE B. P. NO. 461-B

PATTERN NO. 1140

HAMILTON MFG. CO.

DO NOT REMOVE THIS LEAF FROM BOOK

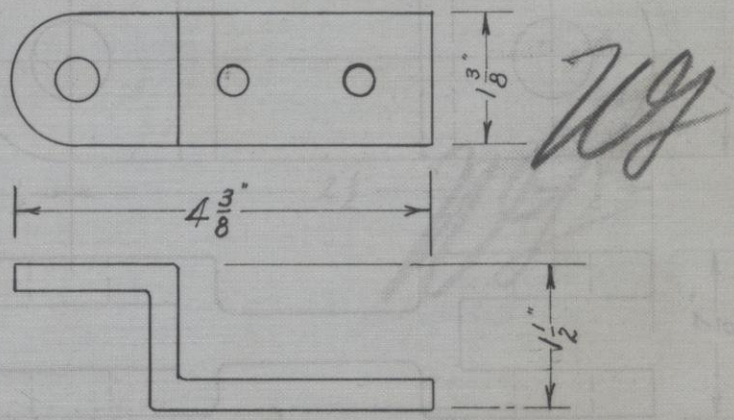

DATE- 9-10-30 K.G.S.

C.I. BRACKETS FOR AUTOSHIFT TABLE
No. 461 - B7 & B5

SEE B. P. NO. 461-B

PATTERN NO. 1139

HAMILTON MFG. CO.

DO NOT REMOVE THIS LEAF FROM BOOK

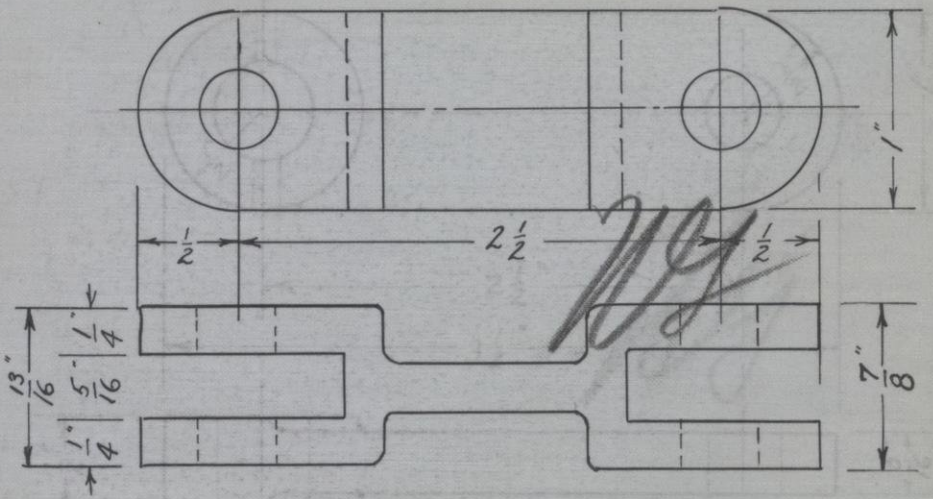

DATE- 9-10-30 K.G.S.

C.I. LINKS FOR AUTOSHIFT TABLE No. 461
PART NO. B-3

SEE B. P. NO. 461-B

PATTERN NO. 1138

HAMILTON MFG. CO.

DO NOT REMOVE THIS LEAF FROM BOOK

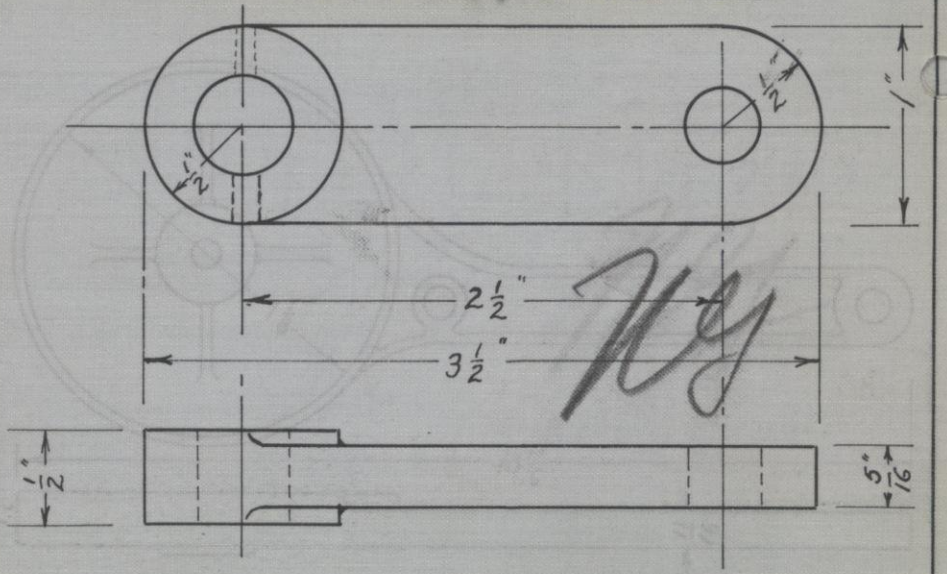

DATE-9-10-30 K.G.S.

C.I. LINKS FOR AUTOSHIFT TABLE #461

PART NO. B-2

SEE B. P. NO. 461-B

PATTERN NO. 1137

HAMILTON MFG. CO.

DO NOT REMOVE THIS LEAF FROM BOOK

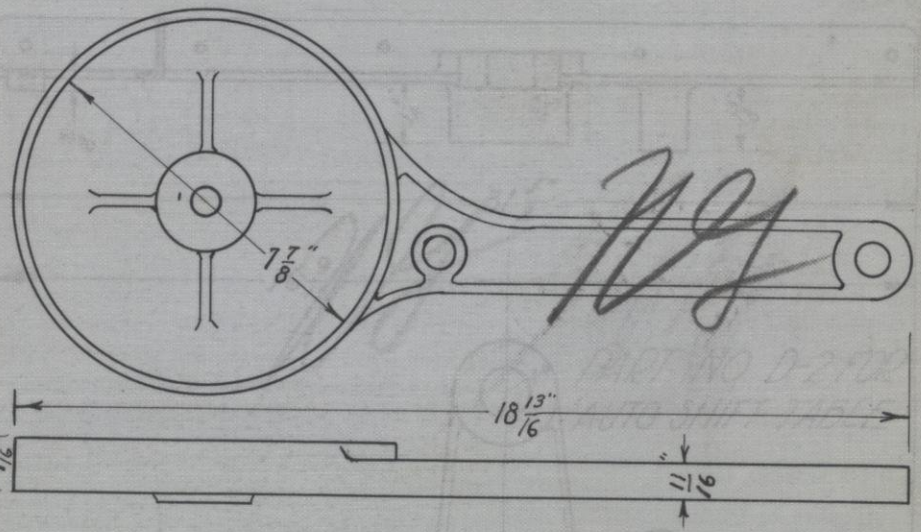

DATE- 9-10-30 - K.G.S.

C.I. BRAKE DRUM FOR AUTOSHIFT TABLE

No. 461 PART NO. B-1

SEE B. P. NO. 461-B

PATTERN NO. 1136

HAMILTON MFG. CO.

DO NOT REMOVE THIS LEAF FROM BOOK

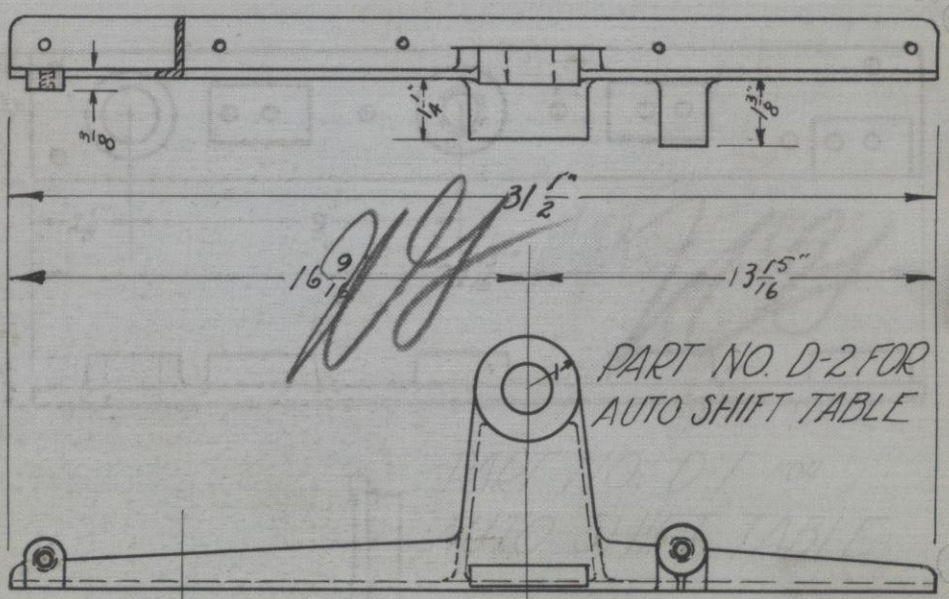

DATE- 9-12-30 - G.J.W.

SEE B. P. NO. 461-D

PATTERN NO. 1135

HAMILTON MFG. CO.

DO NOT REMOVE THIS LEAF FROM BOOK

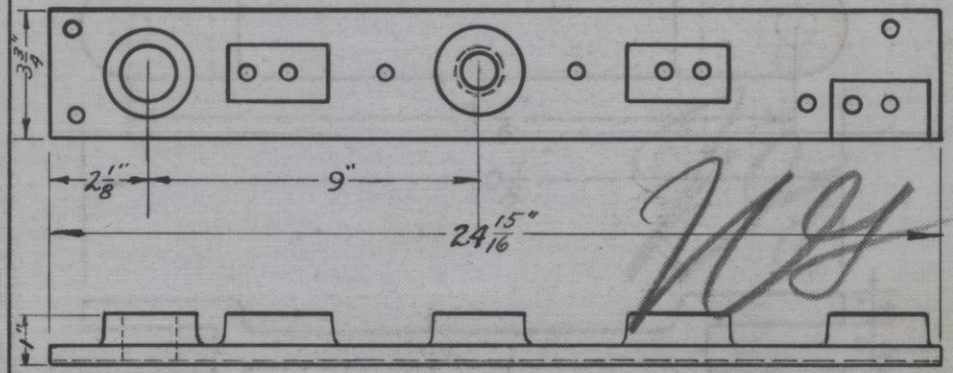

DATE- 9-12-30 G.J.W.

PART NO. D-1 FOR
AUTO SHIFT TABLE

SEE B. P. NO. 461-D

PATTERN NO. 1134

HAMILTON MFG. CO.

DO NOT REMOVE THIS LEAF FROM BOOK

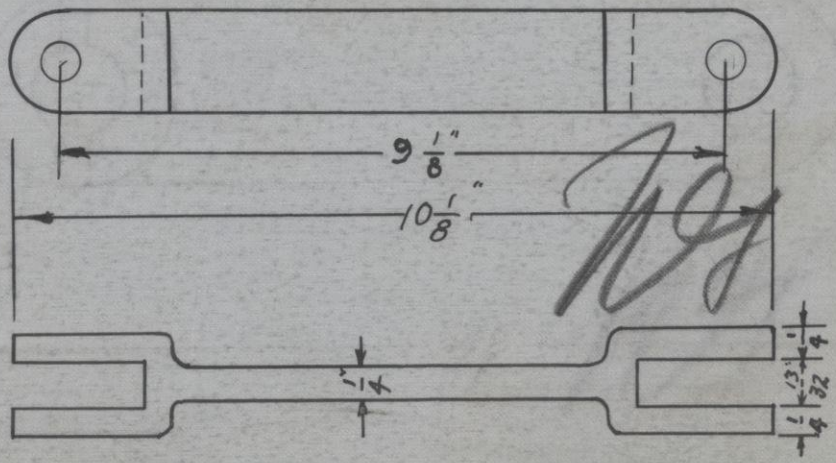

PART NO. E-4 FOR AUTO SHIFT TABLE

DATE- 9-13-30 G.J.W.

SEE B. P. NO. 461-E

PATTERN NO. 1133

HAMILTON MFG. CO.

DO NOT REMOVE THIS LEAF FROM BOOK

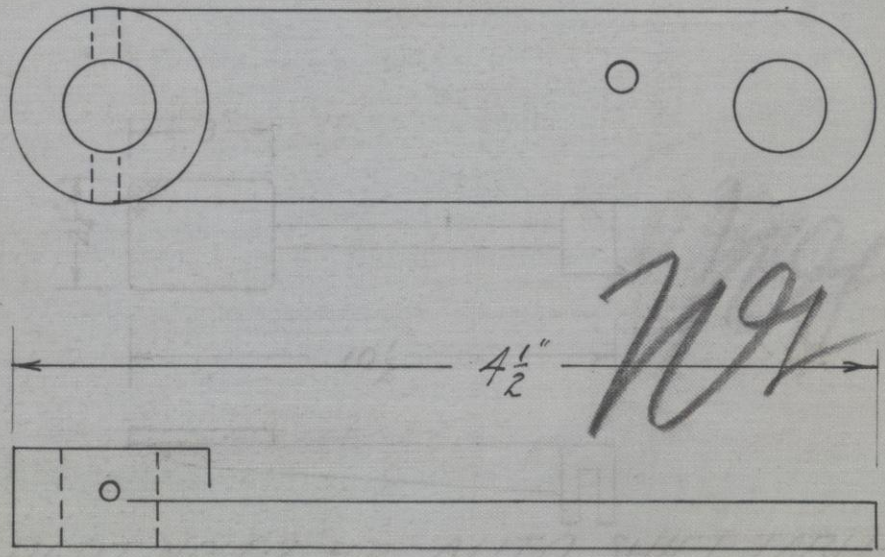

DATE- 9-15-30 K.G.S.

PART NO. E-3 FOR AUTO SHIFT TABLE

SEE B. P. NO. 461-E

PATTERN NO. 1132

HAMILTON MFG. CO.

DO NOT REMOVE THIS LEAF FROM BOOK

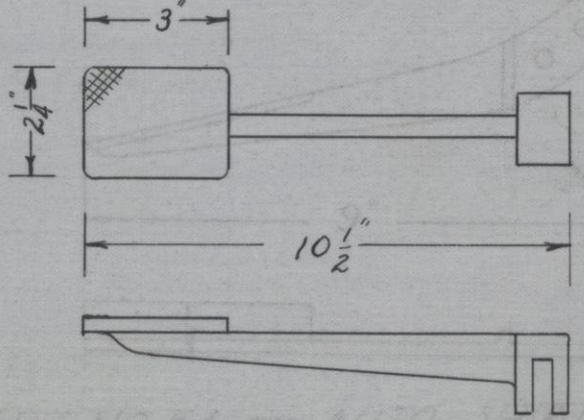

DATE- 9-13-30 K.G.S

PART NO. E-2 FOR AUTO SHIFT TABLE

SEE B. P. NO. 461-E

PATTERN NO. 1131

HAMILTON MFG. CO.

DO NOT REMOVE THIS LEAF FROM BOOK

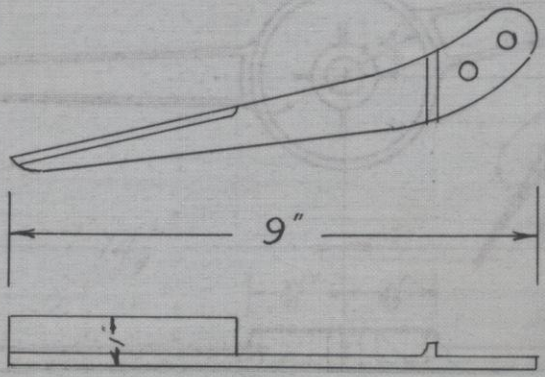

W

DATE- 9-13-30 KGS

PART NO. E-1 FOR AUTO SHIFT TABLE

SEE B. P. NO. 461-E

PATTERN NO. 1130

HAMILTON MFG. CO.

DO NOT REMOVE THIS LEAF FROM BOOK

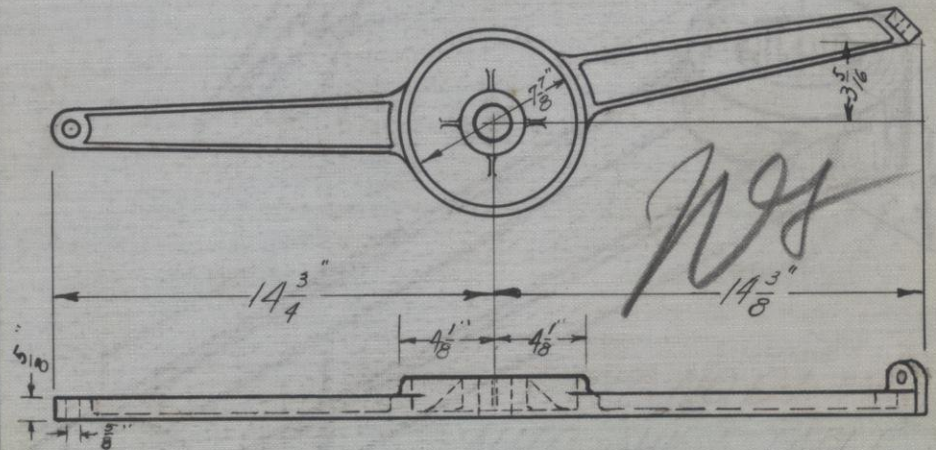

DATE- 9-12-30 - G.I.W.

PART NO. G-2 FOR AUTO SHIFT TABLE

SEE B. P. NO. 461-C

PATTERN NO. 1129

HAMILTON MFG. CO.

DO NOT REMOVE THIS LEAF FROM BOOK

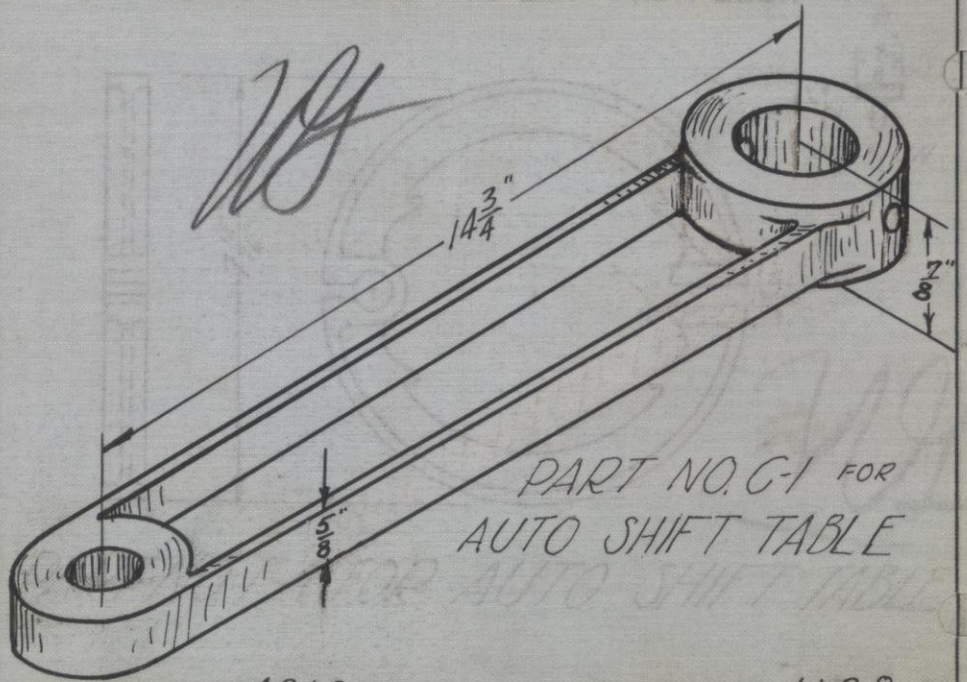

PART NO. C-1 FOR
AUTO SHIFT TABLE

DATE- 9-12-30 G.J.W

SEE B. P. NO. 461C

PATTERN NO. 1128

HAMILTON MFG. CO.

DO NOT REMOVE THIS LEAF FROM BOOK

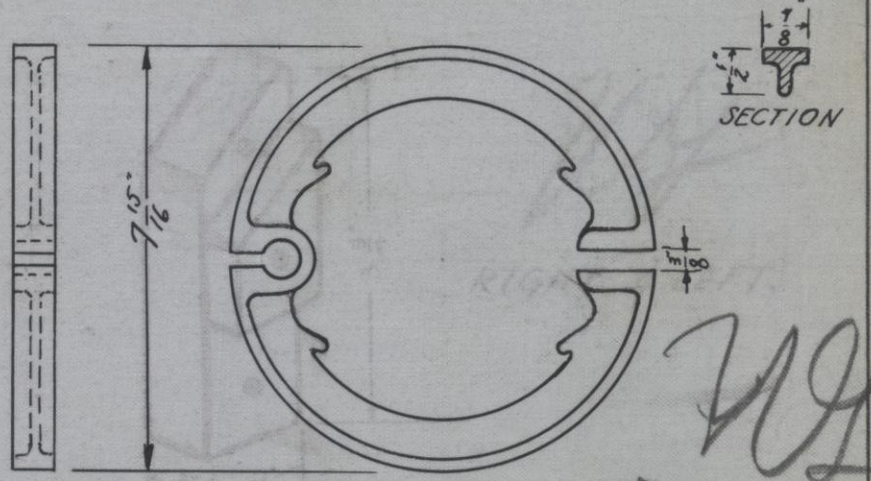

DATE-

PART NO. F-4 FOR AUTO SHIFT TABLE

SEE B. P. NO. 461-F

PATTERN NO. 1127

14

HAMILTON MFG. CO.

DO NOT REMOVE THIS LEAF FROM BOOK

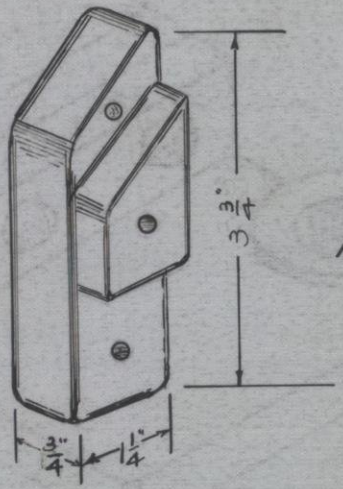

RIGHT & LEFT.

DATE-

CLAMP FOR No. 1980 & No. 239 TABLES.

SEE B. P. NO. 542-C.

PATTERN NO. 1126.

HAMILTON MFG. CO.

DO NOT REMOVE THIS LEAF FROM BOOK

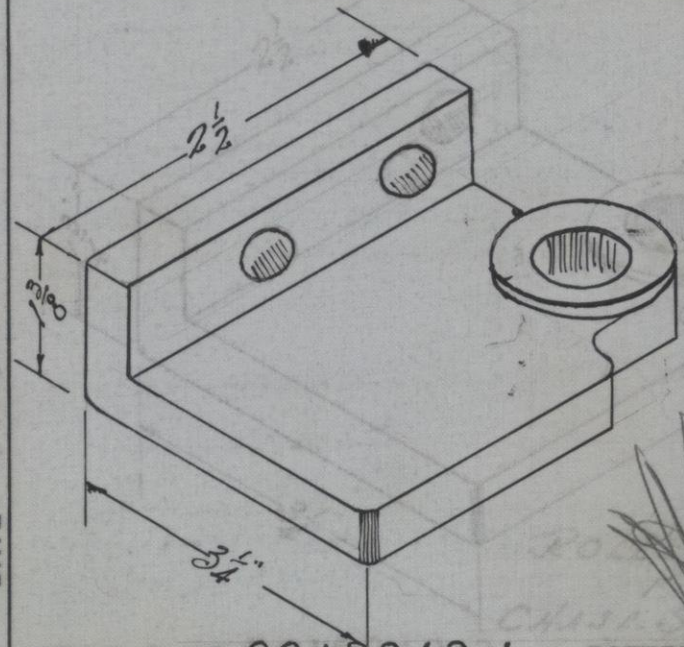

DATE-

SEE B. P. NO. 00 15949-4 PATTERN NO. 1125

HAMILTON MFG. CO.

DO NOT REMOVE THIS LEAF FROM BOOK

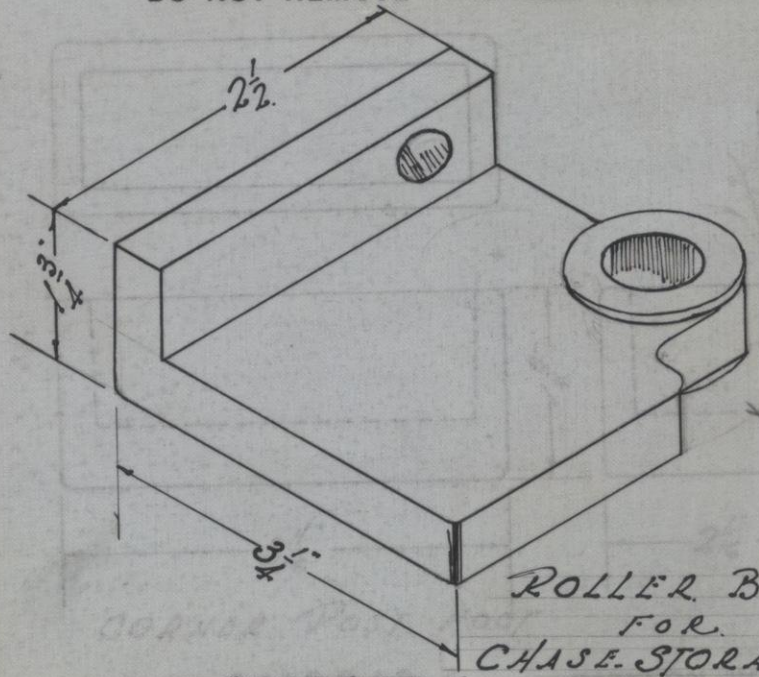

DATE- 9-10-30

ROLLER BRACKET
FOR
CHASE STORAGE RACK

SEE B. P. NO. 0015949-2

PATTERN NO. 1124

HAMILTON MFG. CO.

DO NOT REMOVE THIS LEAF FROM BOOK

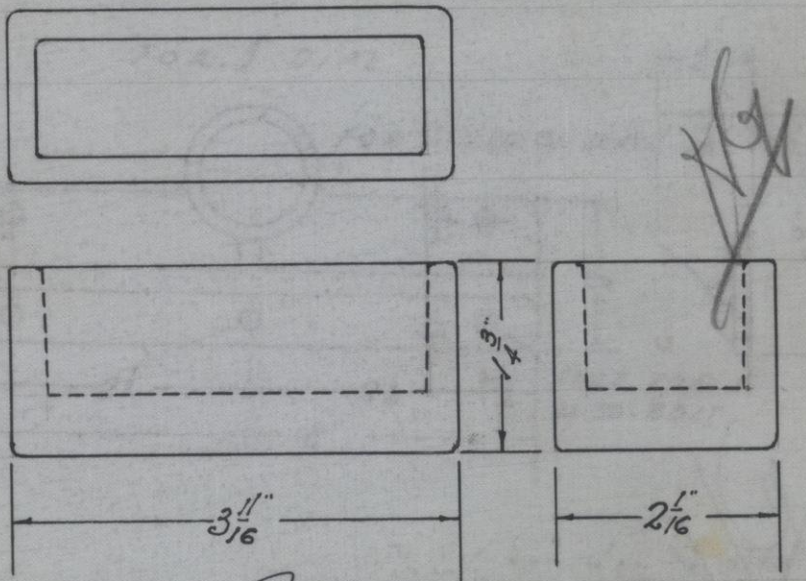

DATE. 9-10-30.

CORNER POST FOOT

SEE B. P. NO. 0015-949-3

PATTERN NO. 1123

HAMILTON MFG. CO.

DO NOT REMOVE THIS LEAF FROM BOOK

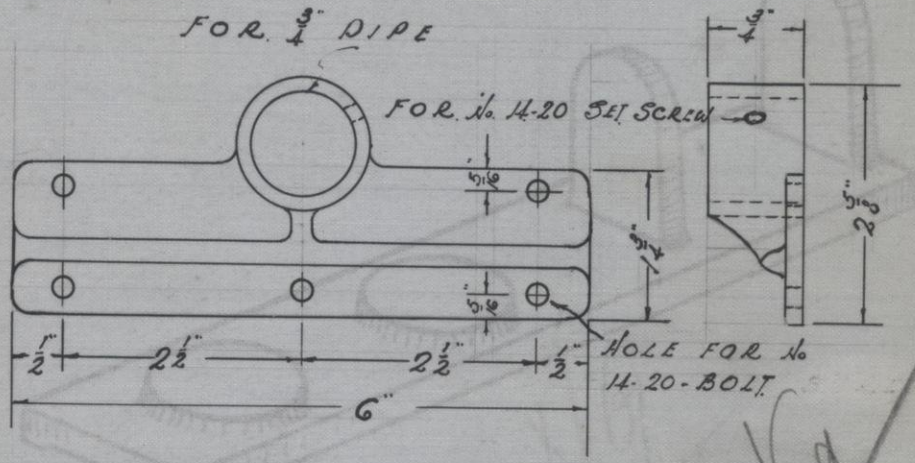

DATE-

SEE B. P. NO. 0015631-A. PATTERN NO. 1121.

HAMILTON MFG. CO.

DO NOT REMOVE THIS LEAF FROM BOOK

DATE- 6-26-30

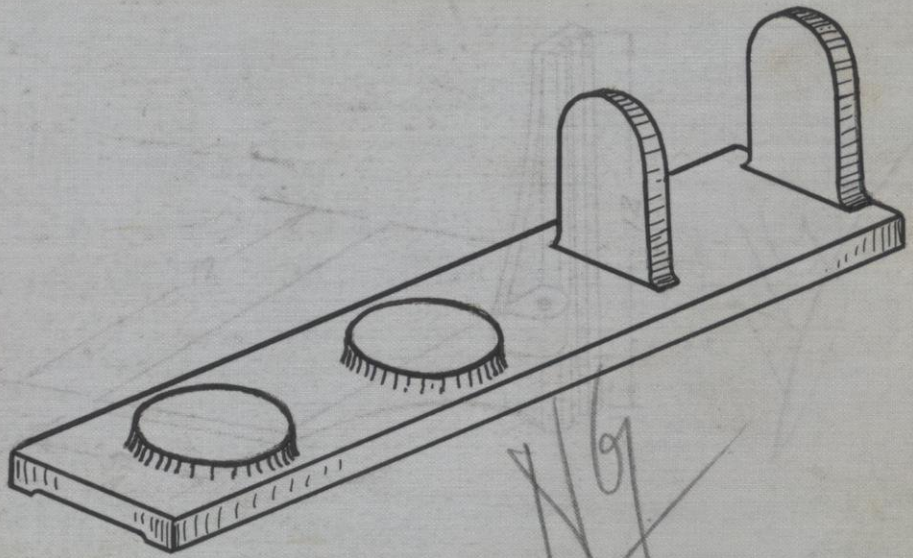

N9

BEARING PLATE FOR AUTO SHIFT TABLE

SEE B. P. NO. 461-B

PATTERN NO. 1120

HAMILTON MFG. CO.

DO NOT REMOVE THIS LEAF FROM BOOK

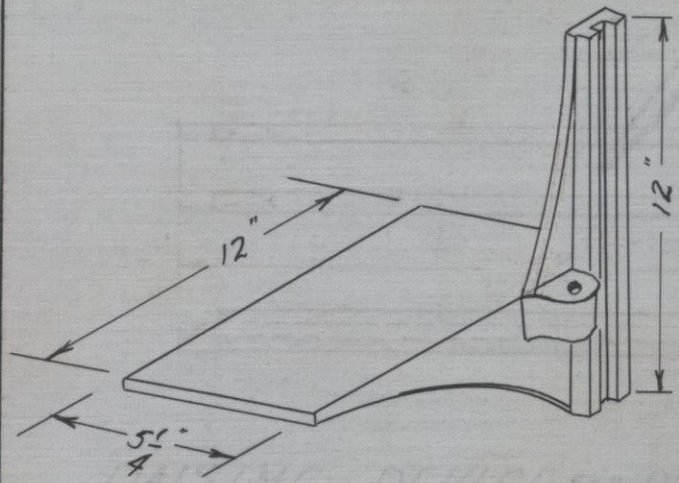

DATE-

C.I. GUIDE SHOE (UNDERSLUNG

SEE B. P. NO. 0015662-A

PATTERN NO. 1118

HAMILTON MFG. CO.

DO NOT REMOVE THIS LEAF FROM BOOK

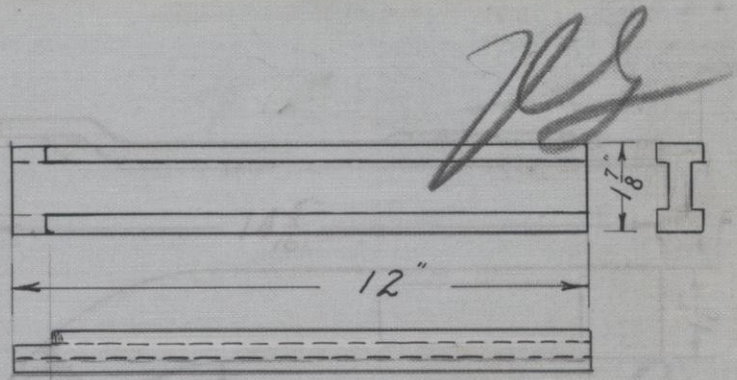

DATE- 6-5-30 JLN

RAISING DEVICE FOR DRAWING & REFERENCE TABLE

SEE B. P. NO. 25694-B

PATTERN NO. 1114

HAMILTON MFG. CO.

DO NOT REMOVE THIS LEAF FROM BOOK

DATE- 6-5-30

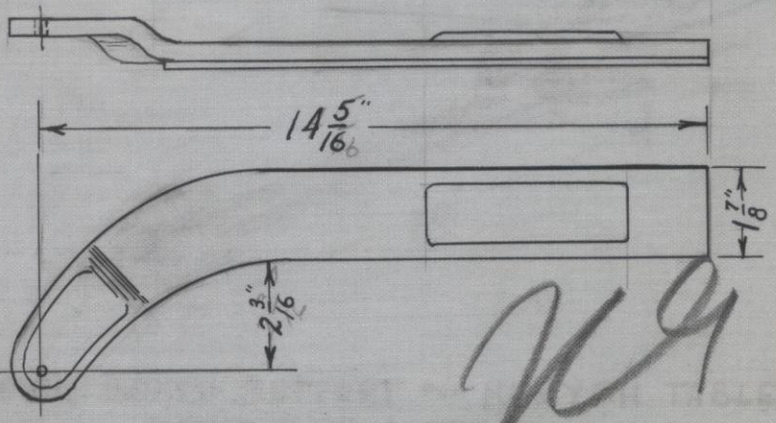

RAISING DEVICE FOR DRAWING & REFERENCE TABLE

SEE B. P. NO. 25694-B

PATTERN NO. 1113

HAMILTON MFG. CO.

DO NOT REMOVE THIS LEAF FROM BOOK

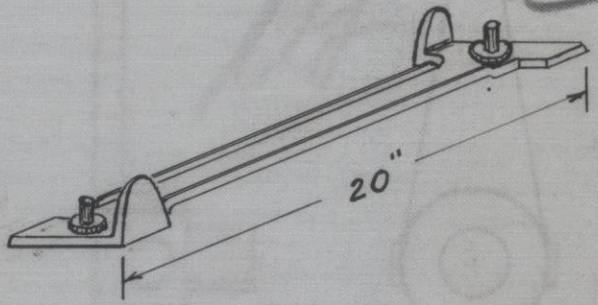

DRAWING BOARD SUPPORT for HURYCH TABLE.
(MAKE RIGHT & LEFT.)

DATE- [illegible] 19 1938

SEE B. P. NO.

PATTERN NO. 1112.

Horych Part No. 13.

HAMILTON MFG. CO.

DO NOT REMOVE THIS LEAF FROM BOOK

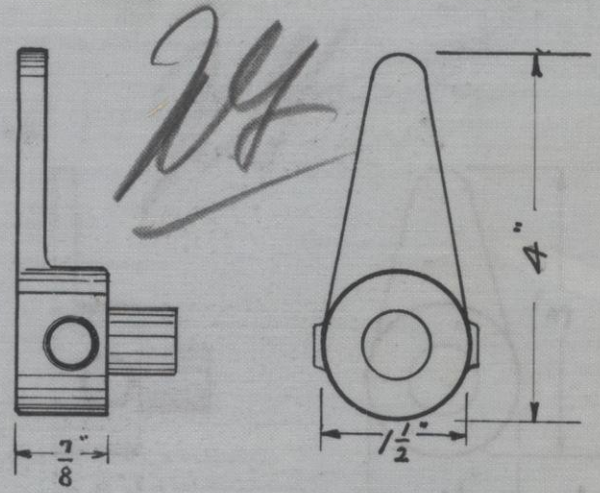

DATE- MAY 11 1911

FOOT TREADLE LINK BRACKET for HURYCH.

SEE B. P. NO.

PATTERN NO. 1111 .

HURYCH PART # 15

HAMILTON MFG. CO.

DO NOT REMOVE THIS LEAF FROM BOOK

DATE- MAY 10 1911

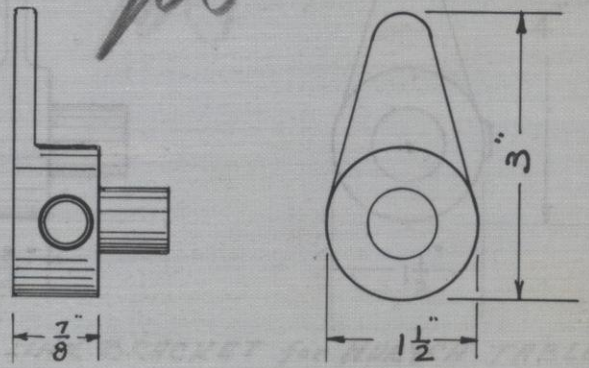

FOOT TREADLE LINK BRACKET for HURYCH TABLE.

SEE B. P. NO.

PATTERN NO. 1110

HURYCH PART No. 14.

HAMILTON MFG. CO.

DO NOT REMOVE THIS LEAF FROM BOOK

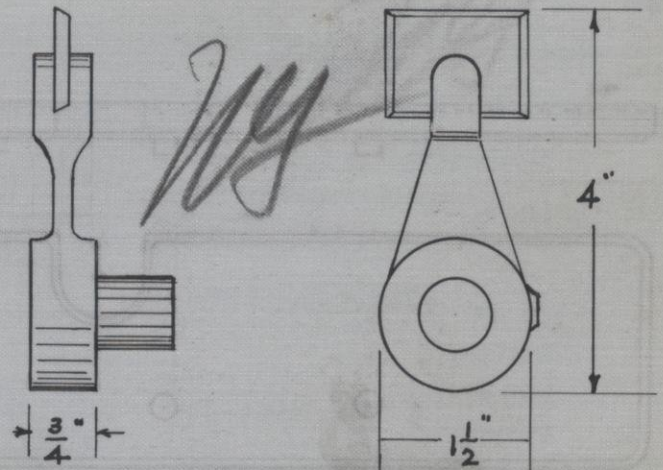

DATE- MAY 19 1931

FOOT TREADLE LINK BRACKET for HURYCH TABLE.

SEE B. P. NO.

PATTERN NO. 1109.

HURYCH PART # 12.

HAMILTON MFG. CO.

DO NOT REMOVE THIS LEAF FROM BOOK

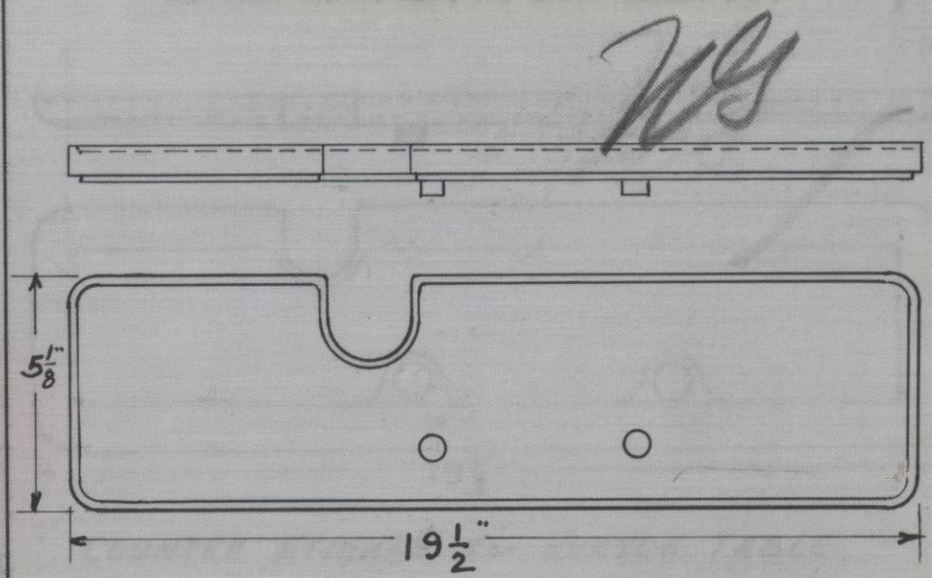

DATE- MAY 10 89

COUNTER WEIGHTS for HURYCH TABLE.

SEE B. P. NO.

PATTERN NO. 1108.

HURYCH PART # 11-C.

HAMILTON MFG. CO.

DO NOT REMOVE THIS LEAF FROM BOOK

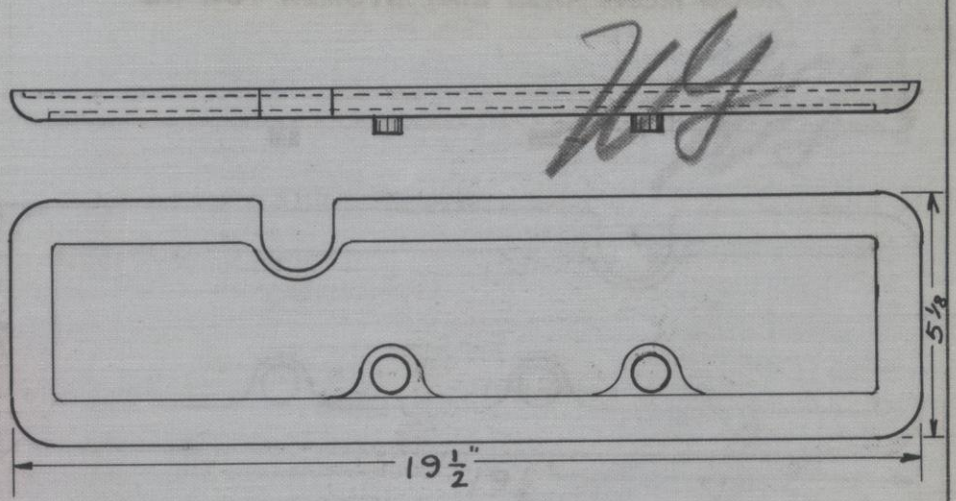

COUNTER WEIGHTS for HURYCH TABLE.

DATE- MAY 1912

SEE B. P. NO.

PATTERN NO. 1107

HURYCH PART # 11-B.

HAMILTON MFG. CO.

DO NOT REMOVE THIS LEAF FROM BOOK

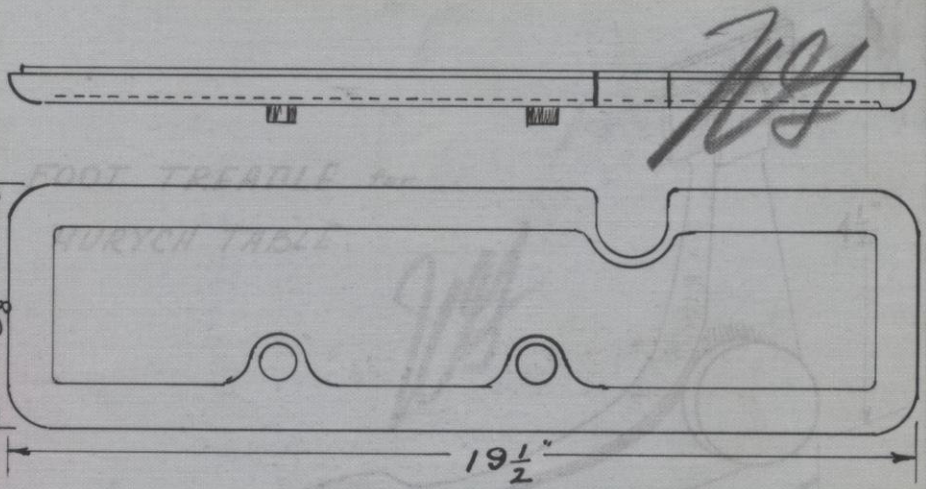

COUNTER WEIGHT for HURYCH TABLE

DATE- MAY 19 1936

SEE B. P. NO.

PATTERN NO. 1106.

HURYCH PART # 11-A.

THE HAMILTON MFG. CO.

DON'T REMOVE THIS LEAF FROM BOOK

FOOT TREADLE for
HURYCH TABLE.

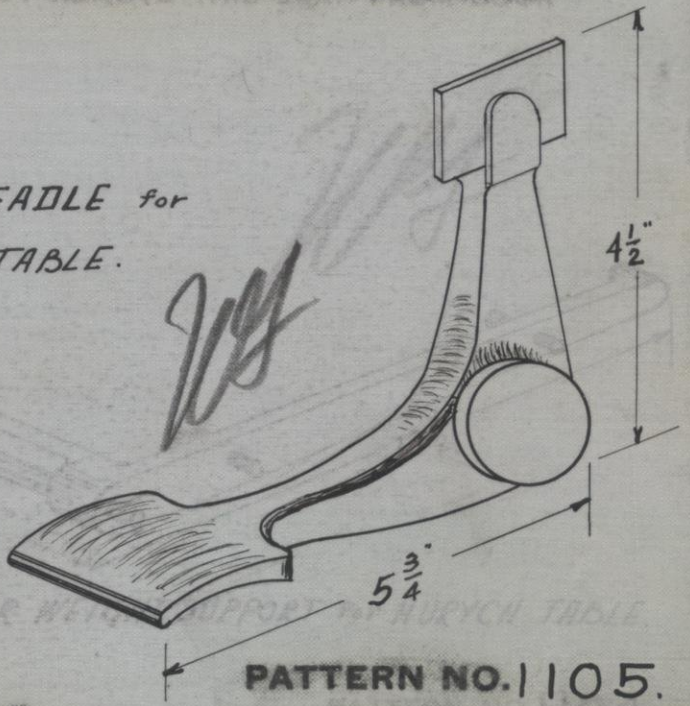

PATTERN NO. 1105.

SEE B. P. NO.

HURYCH PART # 10

HAMILTON MFG. CO.

DO NOT REMOVE THIS LEAF FROM BOOK

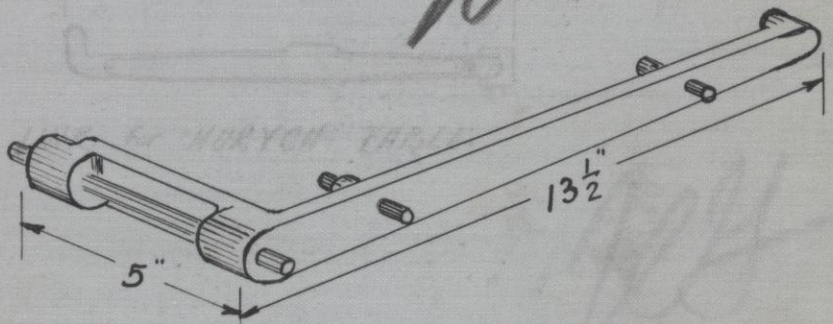

COUNTER WEIGHT SUPPORT for HURYCH TABLE.

DATE- 11 Y 11 03

SEE B. P. NO.

PATTERN NO. 1104.

HURYCH PART # 6.

HAMILTON MFG. CO.

DO NOT REMOVE THIS LEAF FROM BOOK

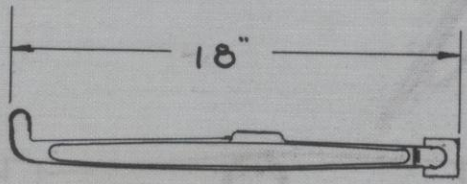

LINK for HURYCH TABLE.

DATE- MY 10 '61

SEE B. P. NO.

PATTERN NO. 1103.

Hurych Part # 4

HAMILTON MFG. CO.

DO NOT REMOVE THIS LEAF FROM BOOK

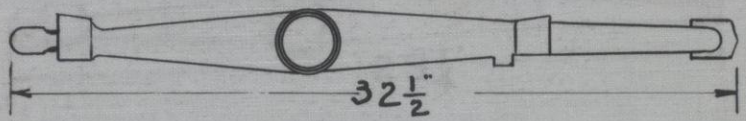

ARM for HURYCH TABLE.

DATE- MAY 10 93

SEE B. P. NO.

PATTERN NO. 1102.

HURYCH PART # 3.

THE HAMILTON MFG. CO.

DON'T REMOVE THIS LEAF FROM BOOK

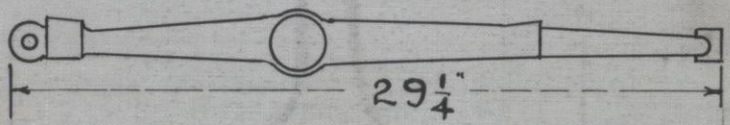

ARM For HURYCH TABLE.

PATTERN NO. 1101.

SEE B. P. NO.

HURYCH PART No. 2.

JUL 19 1921

THE HAMILTON MFG. CO.

DON'T REMOVE THIS LEAF FROM BOOK

STANDARD FOR
HURYCH TABLE.

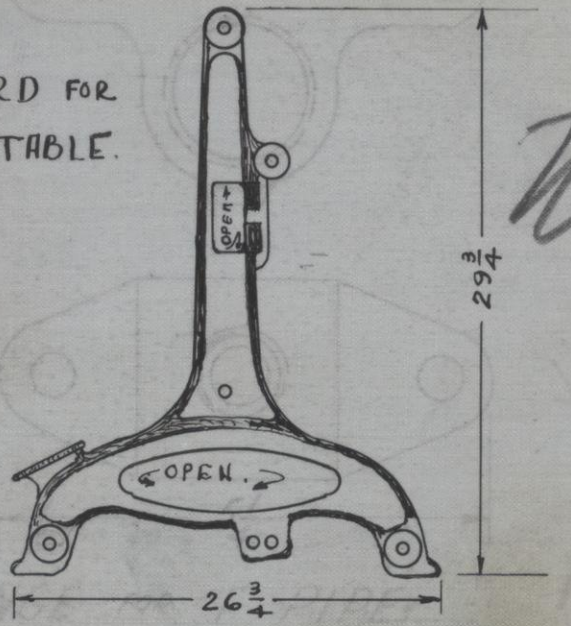

PATTERN NO. 1100.

SEE B. P. NO.

HURYCH PART No 1.

HAMILTON MFG. CO.

DO NOT REMOVE THIS LEAF FROM BOOK

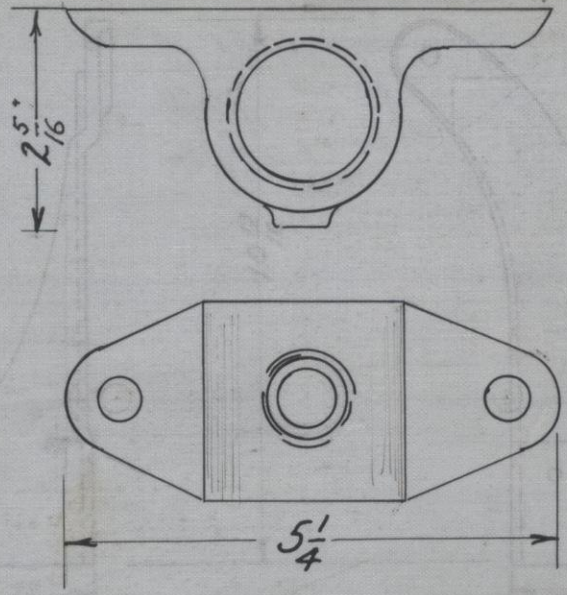

DATE- 4-10-30

FLANGE FOR 1" PIPE

SEE B. P. NO. 521-C

PATTERN NO. 1082

HAMILTON MFG. CO.

DO NOT REMOVE THIS LEAF FROM BOOK

DATE- 3-20-30

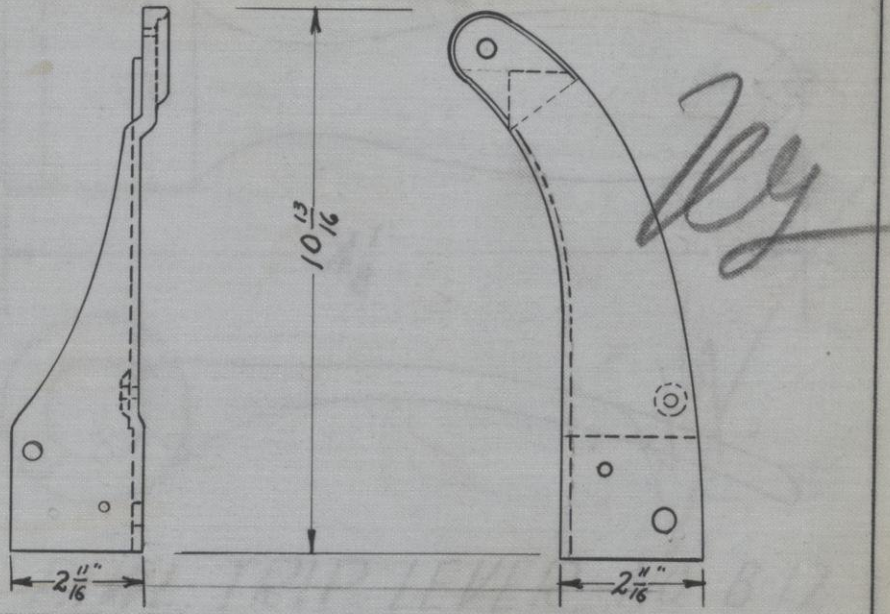

BRACKET FOR Nº 239 TABLE

SEE B. P. NO. 520-C

PATTERN NO 1081

14

HAMILTON MFG. CO.

DO NOT REMOVE THIS LEAF FROM BOOK

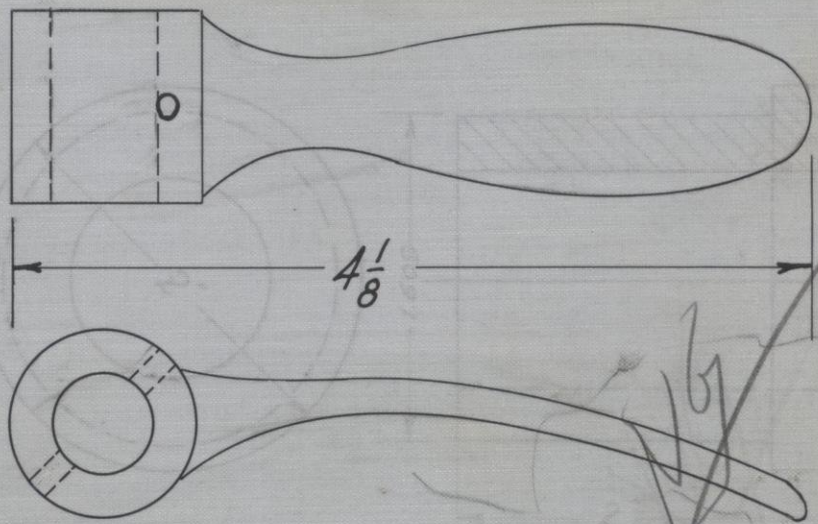

DATE- 3-26-30

PAWL TRIP LEVER NO-B-12

SEE B. P. NO. 0015160-B PATTERN NO. 1080

HAMILTON MFG. CO.

DO NOT REMOVE THIS LEAF FROM BOOK

DATE- 29 1930

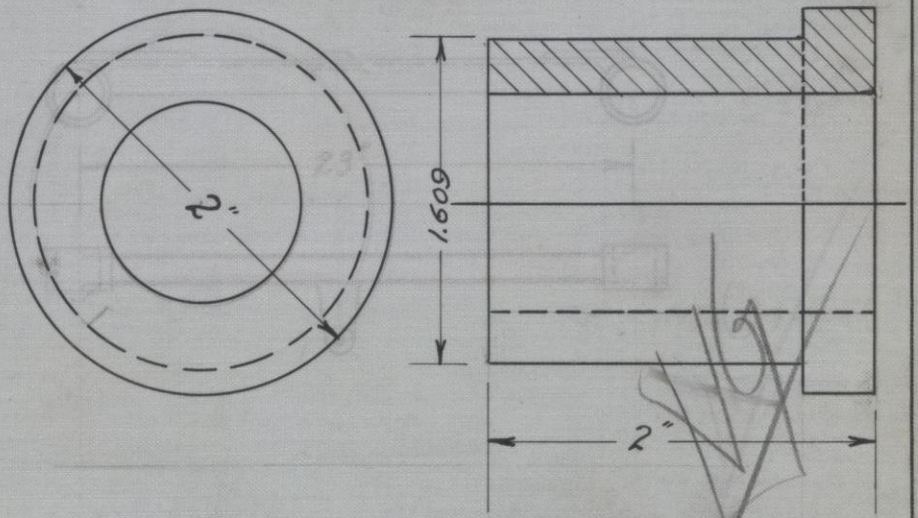

C.I. BUSHING No B-7

SEE B. P. NO. 0015160-B

PATTERN NO. 1079

HAMILTON MFG. CO.

DO NOT REMOVE THIS LEAF FROM BOOK

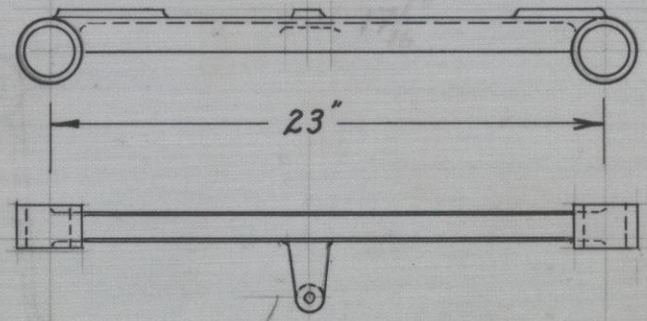

DATE- 21 080

C.I. RAILS NO. B-1

SEE B. P. NO. 0015160-B PATTERN NO. 1078

HAMILTON MFG. CO.

DO NOT REMOVE THIS LEAF FROM BOOK

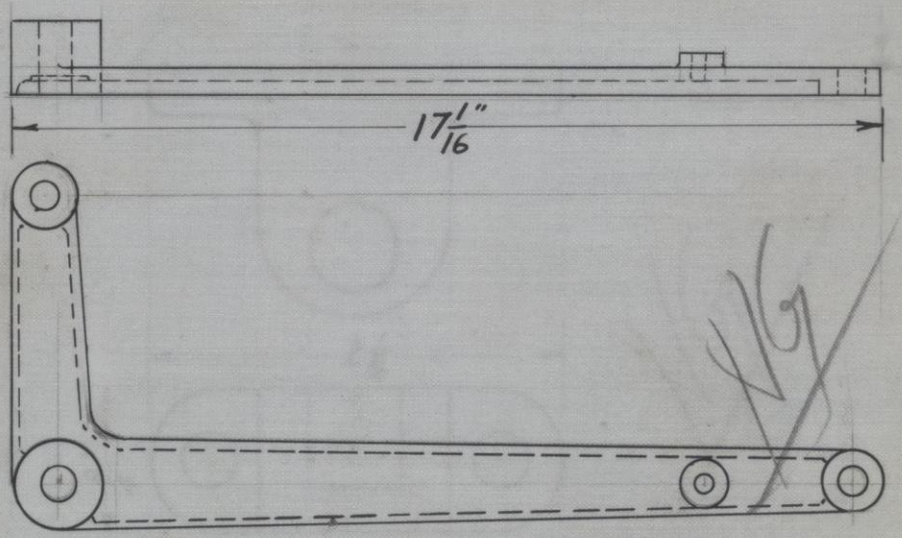

DATE- 3-26-30

C.I. ARM No. B-2

SEE B. P. NO. 001560B

PATTERN NO. 1077

THE HAMILTON MFG. CO.

DON'T REMOVE THIS LEAF FROM BOOK

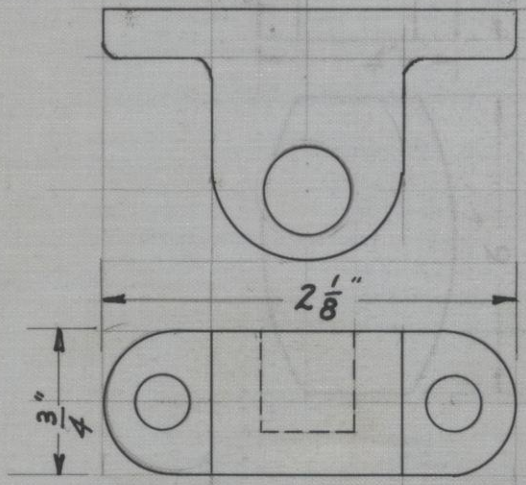

NG

3-21-30

SPRING HOLDERS Nº C-4

PATTERN NO. 1075

SEE B. P. NO. 15120-C

HAMILTON MFG. CO.

DO NOT REMOVE THIS LEAF FROM BOOK

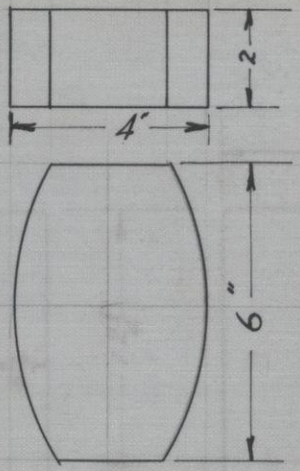

DATE- 3-21-30

C.I. WEIGHTS Nº B-10

SEE B. P. NO 0015120 B

PATTERN NO. 1074

HAMILTON MFG. CO.

DO NOT REMOVE THIS LEAF FROM BOOK

DATE- 3-21-30

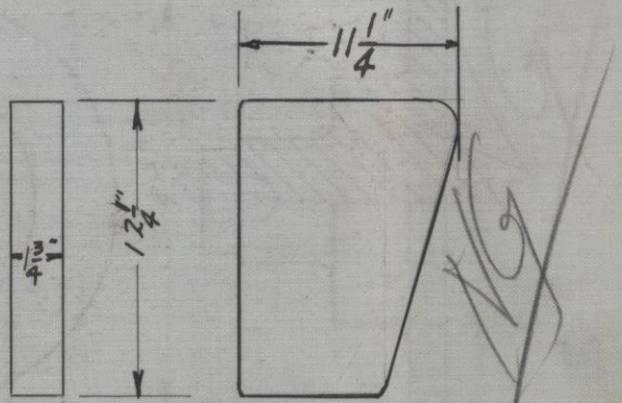

C-I- WEIGHT Nº B-10

SEE B. P. NO. 461-C PATTERN NO. 1073

HAMILTON MFG. CO.

DO NOT REMOVE THIS LEAF FROM BOOK

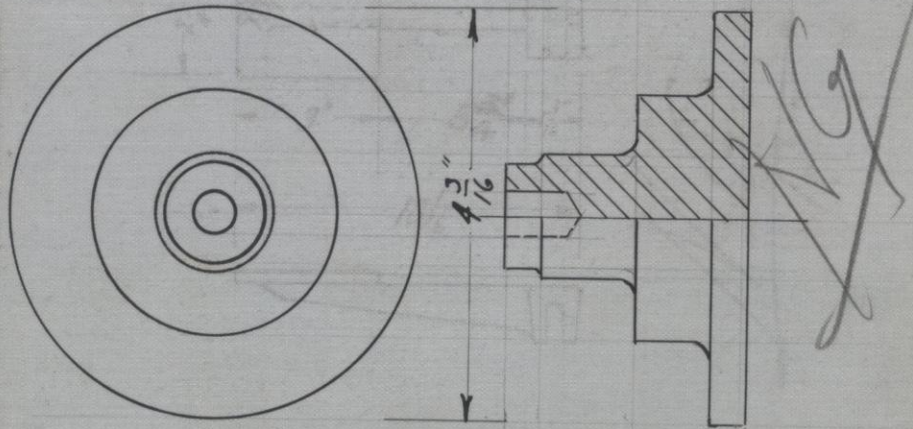

DATE- 3-21-30

C.I. FLANGE BEARINGS Nº B-7

SEE B. P. NO 0015120-B

PATTERN NO. 1072

HAMILTON MFG. CO.

DO NOT REMOVE THIS LEAF FROM BOOK

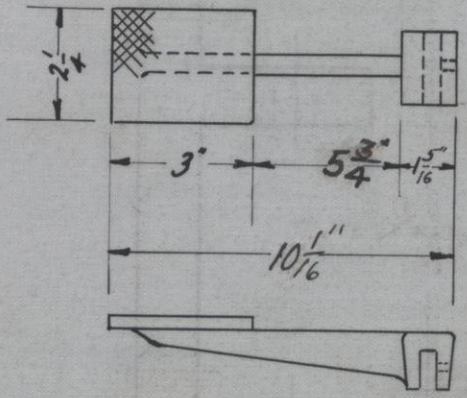

DATE- 3-20-30

C-I- TREADLE N°B6

SEE B. P. NO 461-B

PATTERN NO. 1071

HAMILTON MFG. CO.

DO NOT REMOVE THIS LEAF FROM BOOK

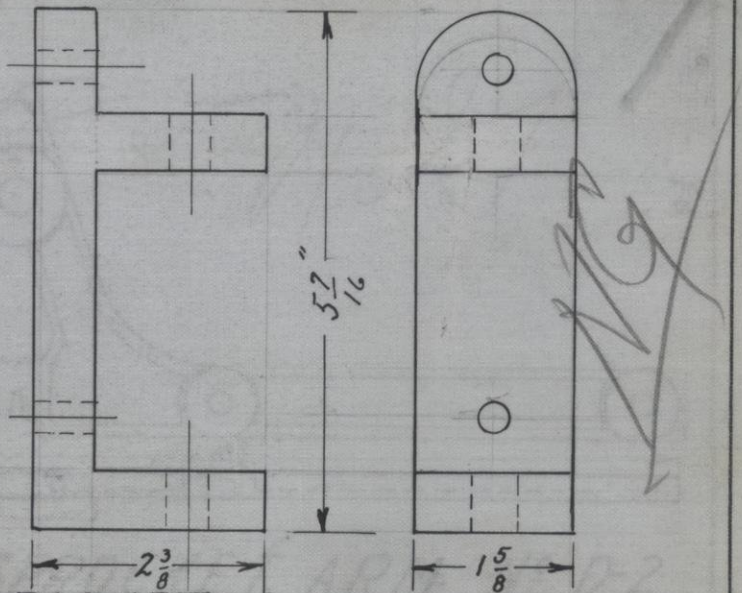

DATE-

C.I. BRACKETS No B-4

SEE B. P. No 0015120 B

PATTERN NO. 1070

THE HAMILTON MFG. CO.

DON'T REMOVE THIS LEAF FROM BOOK

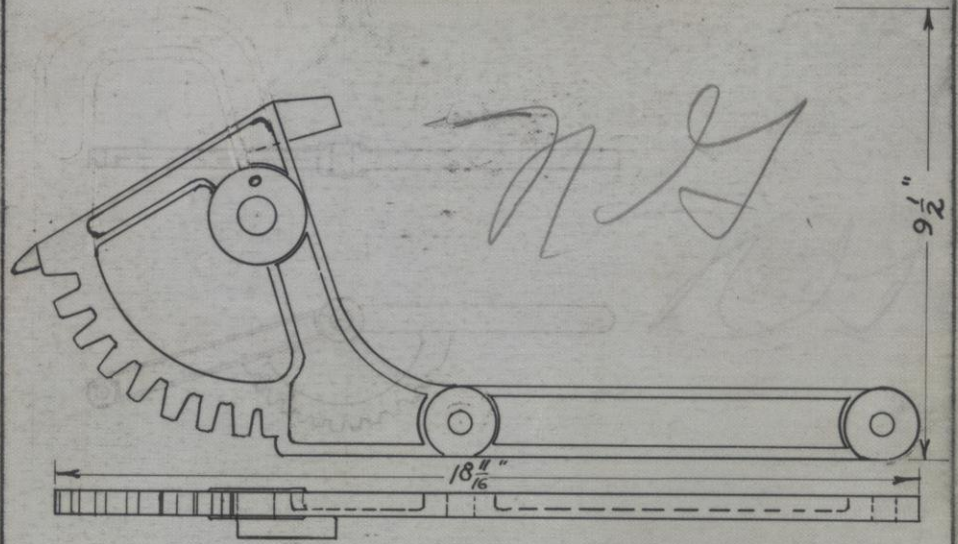

3-21-30

C.I. SPROCKET ARM No D-2

(RIGHT & LEFT)

PATTERN NO. 1069

SEE B. P. NO 461-D

THE HAMILTON MFG. CO.

DON'T REMOVE THIS LEAF FROM BOOK

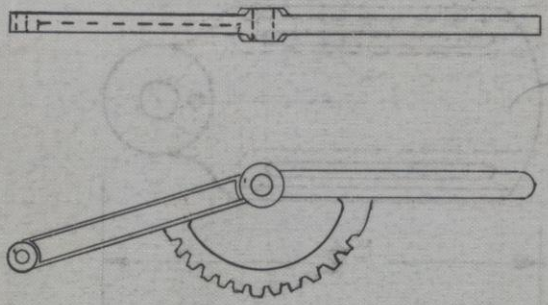

3-21-30 JUL -

C.I. SPROCKET ARM Nº D-1

(RIGHT & LEFT)

PATTERN NO. 1068

SEE B. P. NO 461-D

HAMILTON MFG. CO.

DO NOT REMOVE THIS LEAF FROM BOOK

DATE- 3-21-30

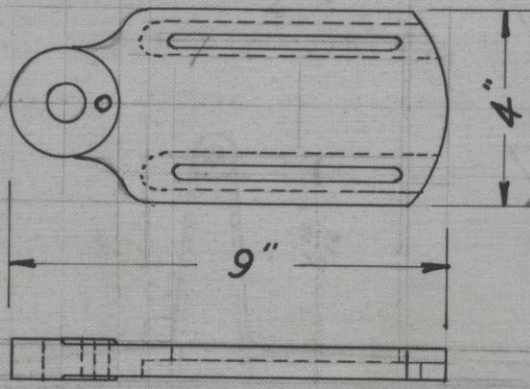

C.I. WEIGHT BRACKET No C-3

SEE B. P. No 0015120-C PATTERN NO. 1067

THE HAMILTON MFG. CO.

DON'T REMOVE THIS LEAF FROM BOOK

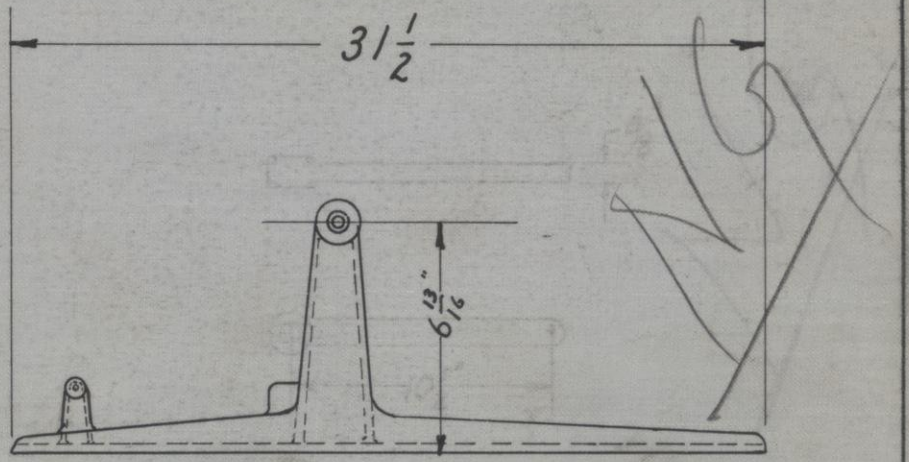

C.I. BRACKET (RIGHT & LEFT) # C-2

PATTERN NO. 1066

SEE B. P. NO. 461-C

MAR 25 1930

THE HAMILTON MFG. CO.

DON'T REMOVE THIS LEAF FROM BOOK

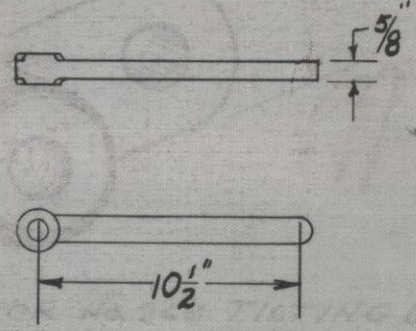

3-21-30

C.I. ARM (RIGHT & LEFT) No C-1

PATTERN NO. 1065

SEE B. P. NO 461-C

13

THE HAMILTON MFG. CO.

DON'T REMOVE THIS LEAF FROM BOOK

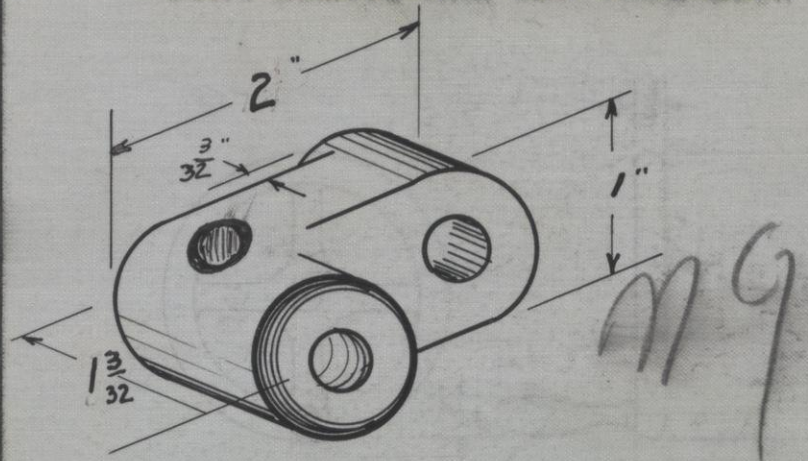

MG

BRACKET FOR No. 268 TILTING DEVICE
WITH 7/16" ROD.

PATTERN NO. 1057

SEE B. P. NO. 515-C.

THE HAMILTON MFG. CO.

DON'T REMOVE THIS LEAF FROM BOOK

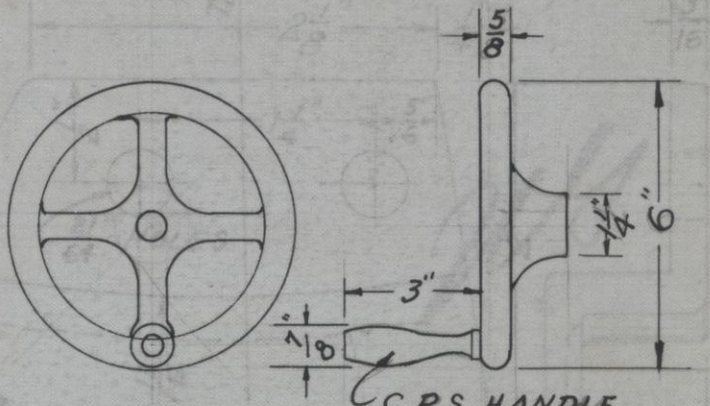

HAND WHEEL

PATTERN NO. 1054

SEE B. P. NO. 0014411-C

THE HAMILTON MFG. CO.

DON'T REMOVE THIS LEAF FROM BOOK

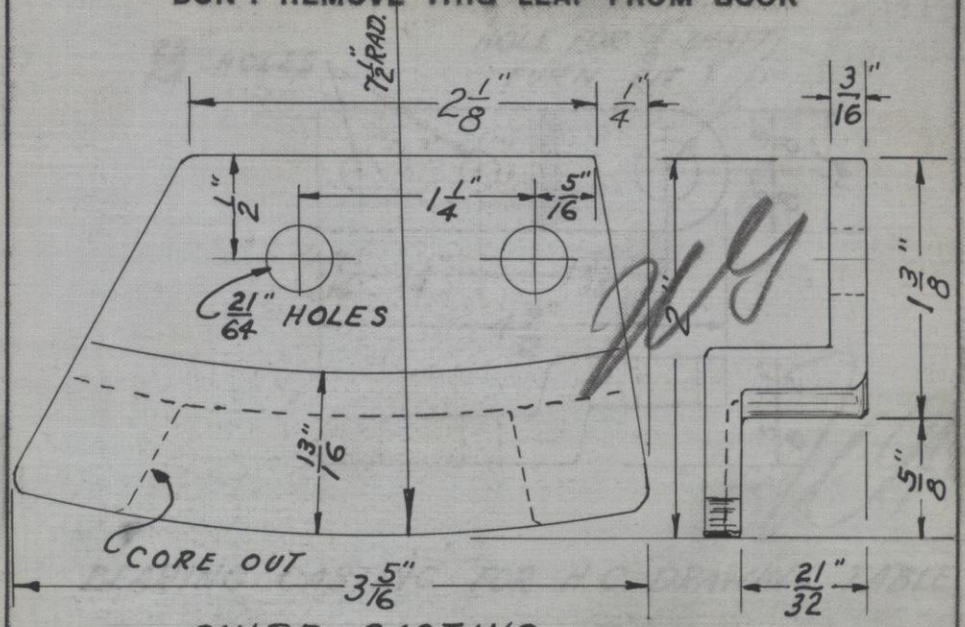

GUIDE CASTING

PATTERN NO. 1053

SEE B. P. NO. 0014411-C

THE HAMILTON MFG. CO.

DON'T REMOVE THIS LEAF FROM BOOK

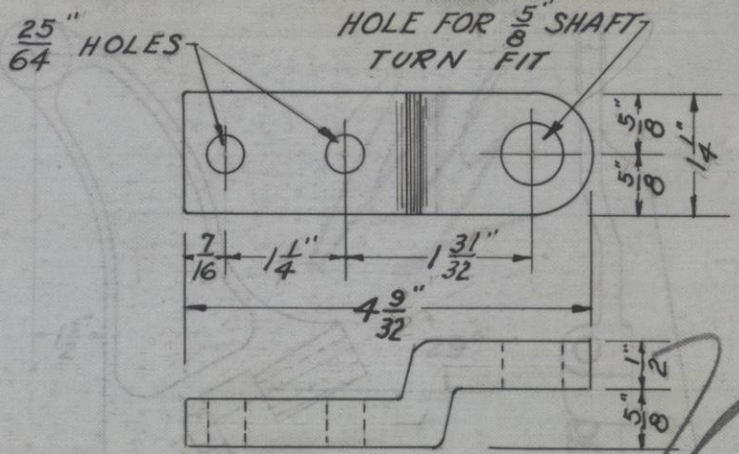

169

BEARING CASTING FOR H.C. DRAWING TABLE

PATTERN NO. 1052

SEE B. P. NO. 0014411-C

THE HAMILTON MFG. CO.

DON'T REMOVE THIS LEAF FROM BOOK

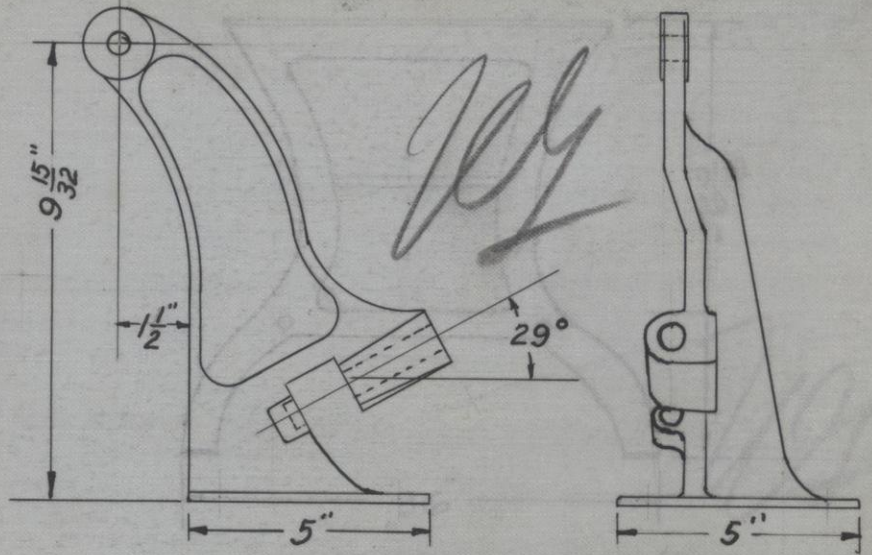

BRACKETS FOR H.C. DRAWING TABLE

PATTERN NO. 1051

SEE B. P. NO. 0014411-C

13

THE HAMILTON MFG. CO.

DON'T REMOVE THIS LEAF FROM BOOK

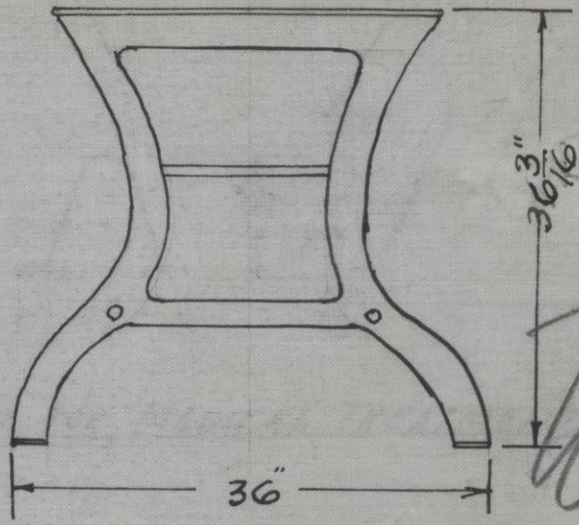

BASE FOR DRAWING TABLE

PATTERN NO. 1050

R & L

SEE B. P. NO. 22526

REV-1-28-30.

THE HAMILTON MFG. CO.

DON'T REMOVE THIS LEAF FROM BOOK

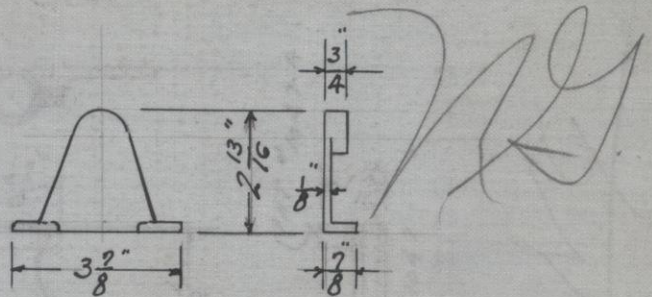

BRACKET FOR MEDICAL TREATMENT CABT.

PATTERN NO. 1048

SEE B. P. NO. 25031-B.

THE HAMILTON MFG. CO.

DON'T REMOVE THIS LEAF FROM BOOK

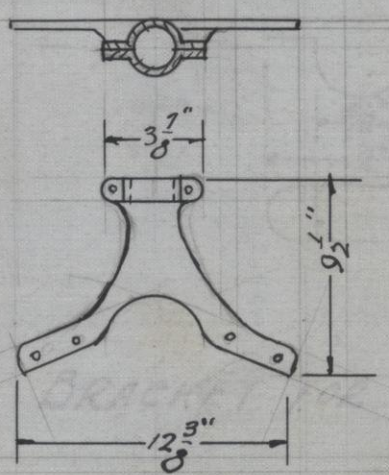

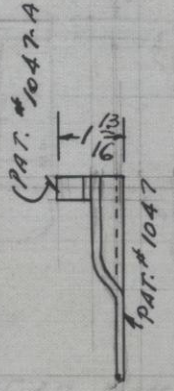

SUPPORT FOR 1" PIPE

PATTERN NO. 1047
1047-A

SEE B. P. NO. 511-C

THE HAMILTON MFG. CO.

DON'T REMOVE THIS LEAF FROM BOOK

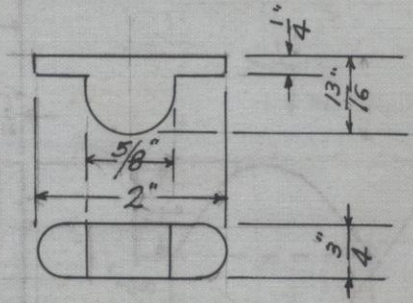

BRACKET FOR EAR-NOSE & THROAT CABT.

PATTERN NO. 1045

SEE B. P. NO. 24956.

HAMILTON MFG. CO.

DO NOT REMOVE THIS LEAF FROM BOOK

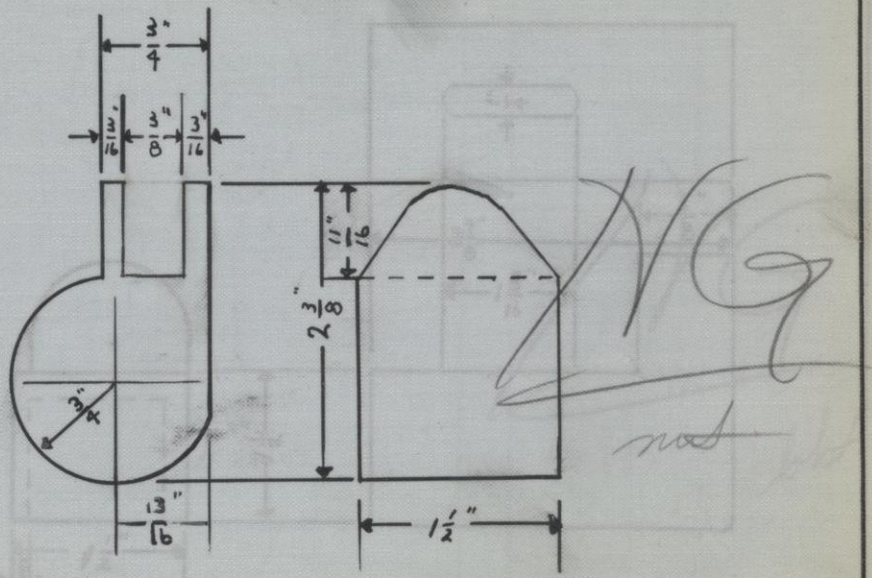

DATE-

SEE B. P. NO. 0014527-E

PATTERN NO. 1044

HAMILTON MFG. CO.

DO NOT REMOVE THIS LEAF FROM BOOK

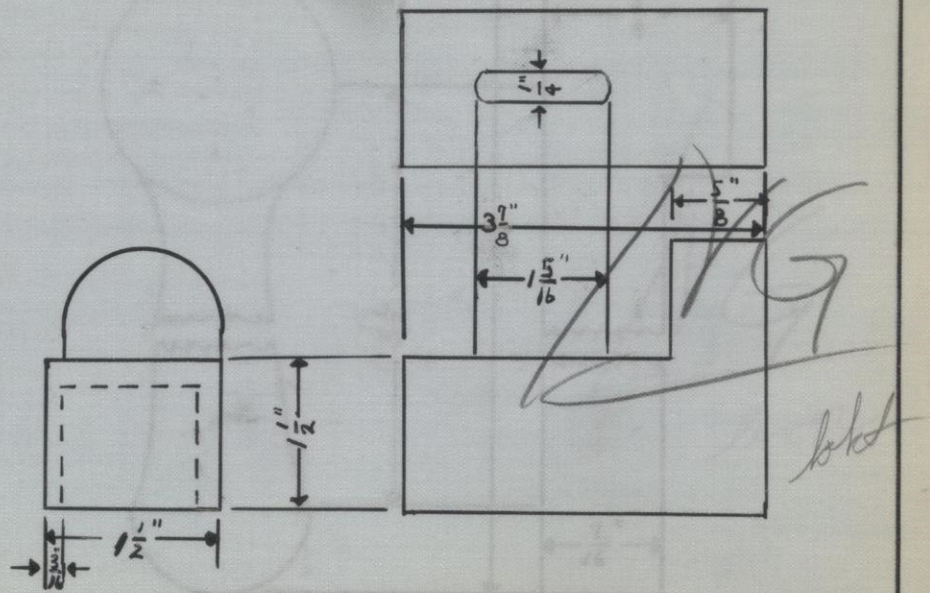

DATE-

SEE B. P. NO. 0014527-E

PATTERN NO. 1043

HAMILTON MFG. CO.

DO NOT REMOVE THIS LEAF FROM BOOK

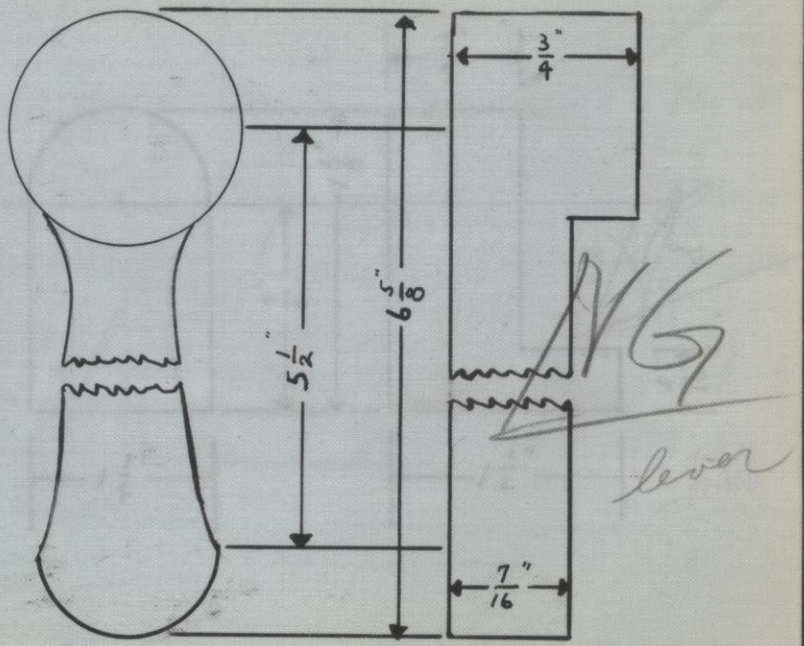

DATE-

SEE B. P. NO. 0014527-E

PATTERN NO. 1042

HAMILTON MFG. CO.

DO NOT REMOVE THIS LEAF FROM BOOK

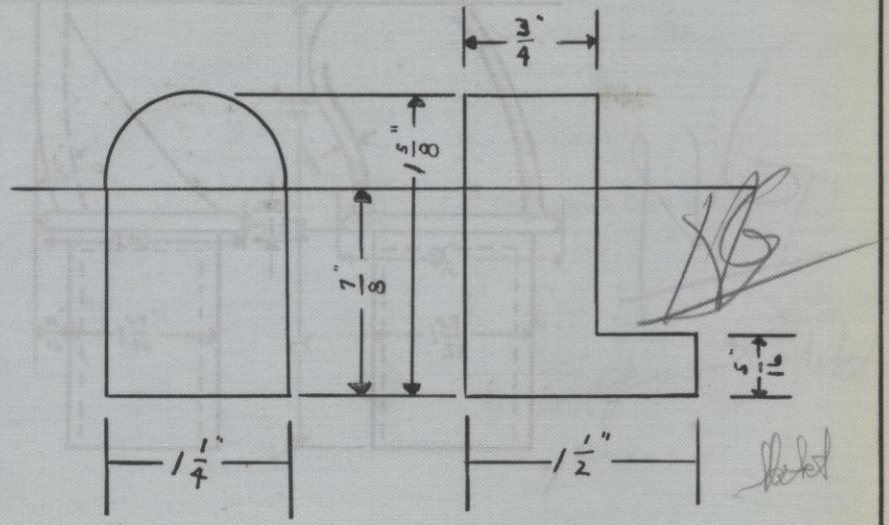

DATE-

SEE B. P. NO. 00/4527-E

PATTERN NO. 1041

HAMILTON MFG. CO.

DO NOT REMOVE THIS LEAF FROM BOOK

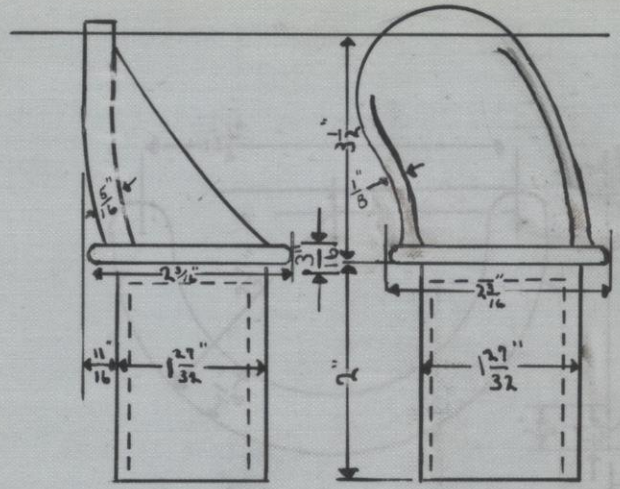

NG

print WH

DATE-

SEE B. P. NO. 0014527-E

PATTERN NO. 1040

HAMILTON MFG. CO.

DO NOT REMOVE THIS LEAF FROM BOOK

Circle Iron

NG

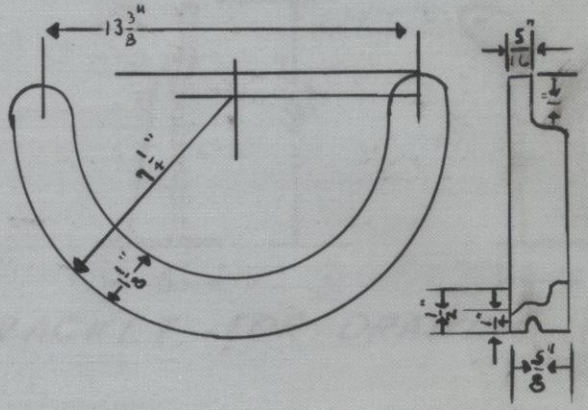

DATE-

SEE B. P. NO. 0014527-E

PATTERN NO. 1039

THE HAMILTON MFG. CO.

DON'T REMOVE THIS LEAF FROM BOOK

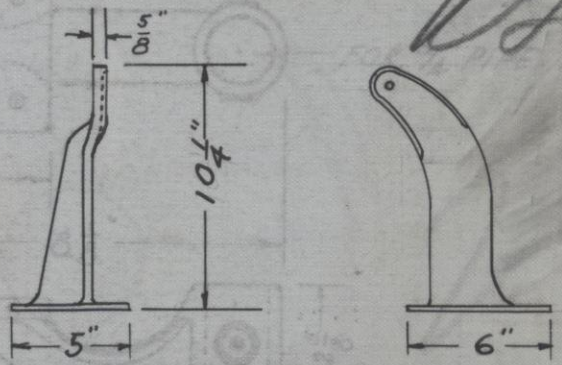

BRACKET FOR DRAWING TABLE

PATTERN NO. 1034

SEE B. P. NO. 0014213-A

14

THE HAMILTON MFG. CO.

DON'T REMOVE THIS LEAF FROM BOOK

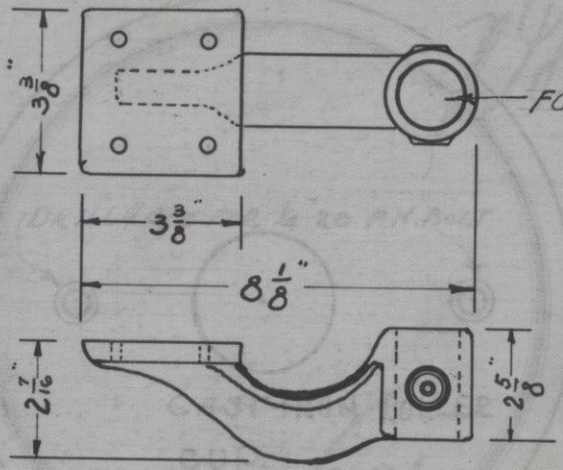

JS

BRACKET FOR No. 250-B. TABLE.

CAST IRON.

PATTERN NO. 1033.

SEE B. P. NO. 508-C.

13

THE HAMILTON MFG. CO.

DON'T REMOVE THIS LEAF FROM BOOK

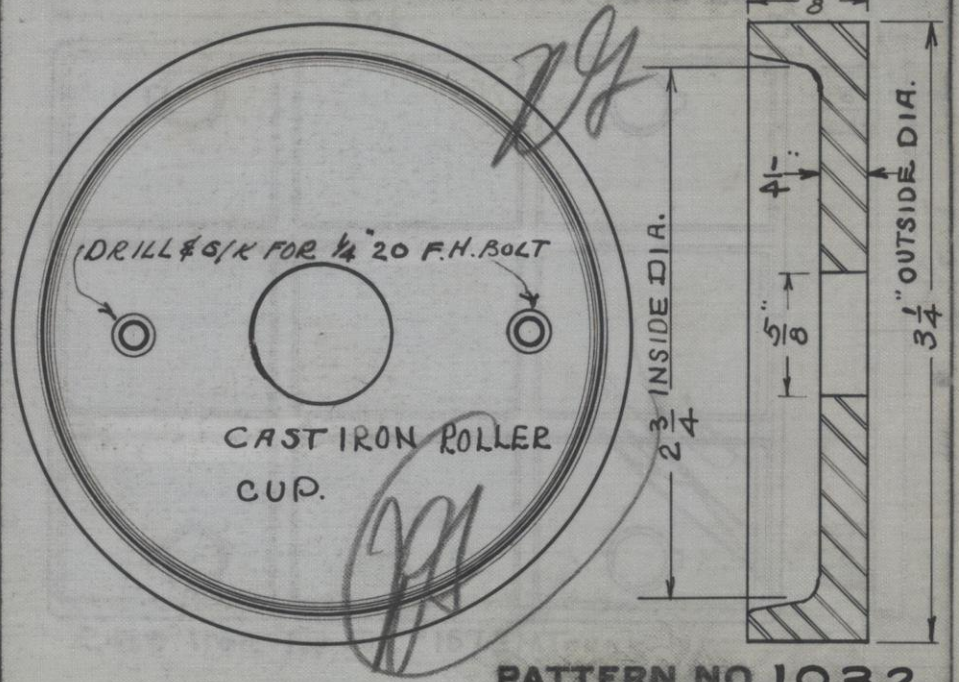

PATTERN NO. 1032

SEE B. P. NO. 0012598

atm. 6-13-29

13

THE HAMILTON MFG. CO.

DON'T REMOVE THIS LEAF FROM BOOK

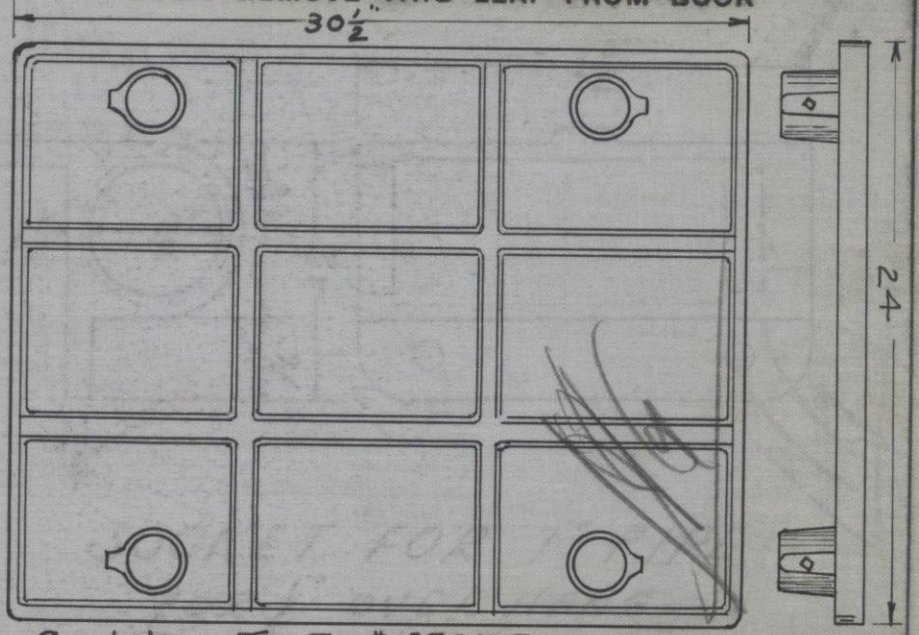

Cast Iron Top For #15731-A Truck.

PATTERN NO. 1029

SEE B. P. NO. 15731-A-5 Absolete.

13

THE HAMILTON MFG. CO.

DON'T REMOVE THIS LEAF FROM BOOK

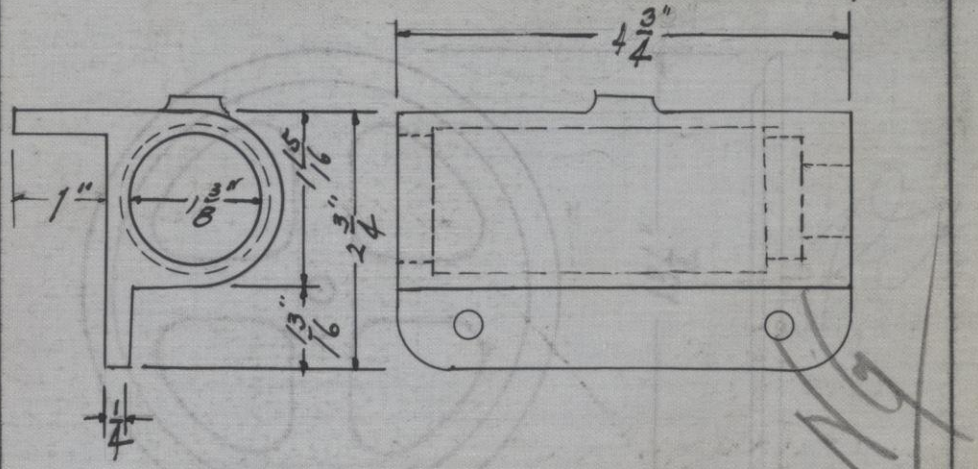

SOCKET FOR 1" PIPE

FOR 1/4" OVER HANG

PATTERN NO. 1027

SEE B. P. NO. 505-C

13

THE HAMILTON MFG. CO.

DON'T REMOVE THIS LEAF FROM BOOK

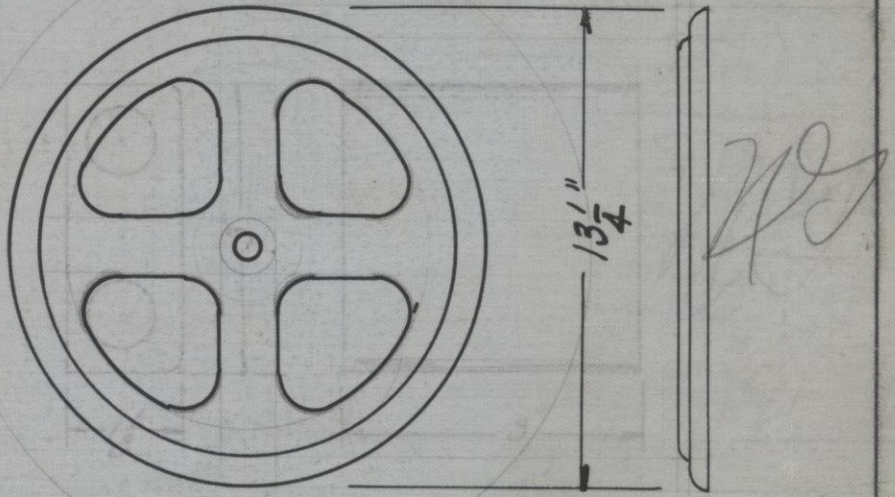

BASE FOR REVOLVING CARD FILE

PATTERN NO. 1021

SEE B. P. NO. 0013177

B

THE HAMILTON MFG. CO.

DON'T REMOVE THIS LEAF FROM BOOK

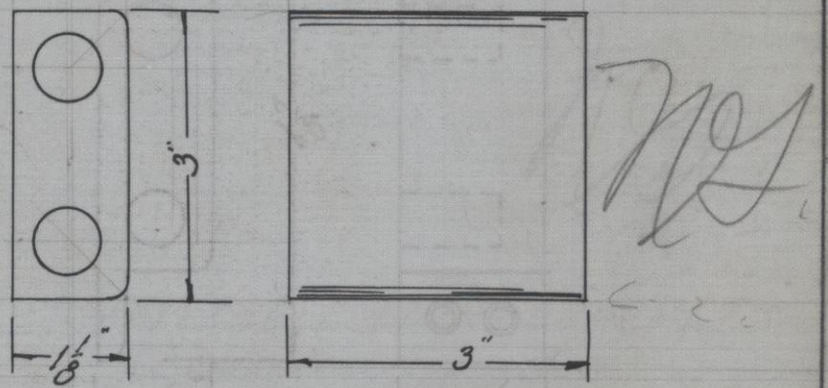

SLIDING DEVICE FOR LIGHT FIXTURE ON DRAWING TABLE

PATTERN NO. 1020

SEE B. P. NO. 24120

4-10-29 L.S. Johnson

13

THE HAMILTON MFG. CO.

DON'T REMOVE THIS LEAF FROM BOOK

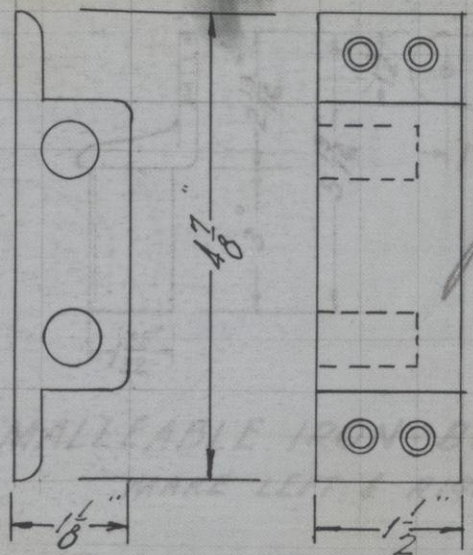

SPECIAL CASTING FOR SLIDING LIGHT FIXTURE CASTING.

PATTERN NO. 1019

SEE B. P. NO. 24120

4-10-29 SLL

THE HAMILTON MFG. CO.

DON'T REMOVE THIS LEAF FROM BOOK

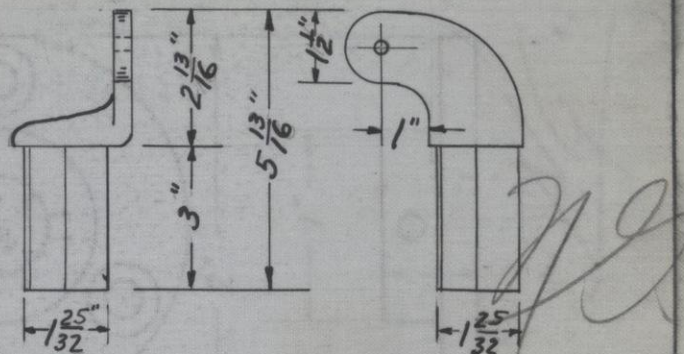

MALLEABLE IRON BRACKETS

MAKE LEFT & RIGHT

PATTERN NO. 1018

SEE B. P. NO. 0013610-A

13

THE HAMILTON MFG. CO.

DON'T REMOVE THIS LEAF FROM BOOK

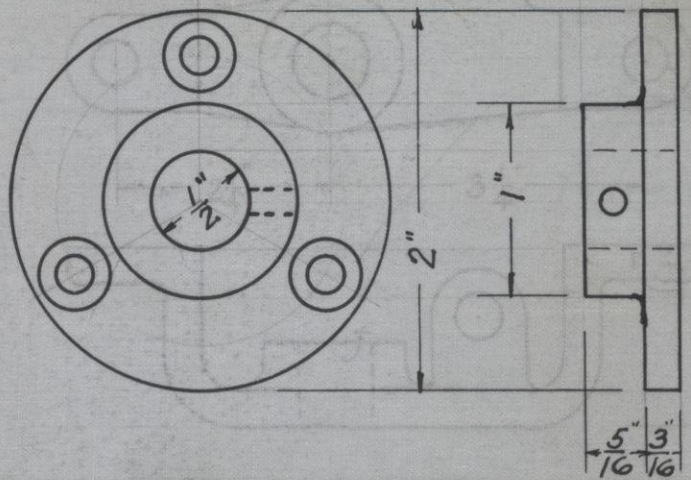

FLANGE FOR LIFTING SCREW

PATTERN NO. 1016

SEE B. P. NO. 23796-A

THE HAMILTON MFG. CO.

DON'T REMOVE THIS LEAF FROM BOOK

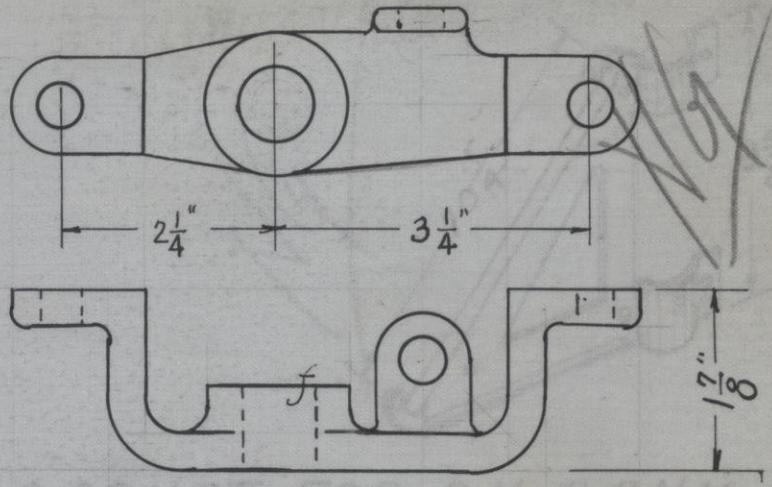

BRACKET FOR LIFTING DEVICE

PATTERN NO. 1015

SEE B. P. NO. 23796A

13

THE HAMILTON MFG. CO.

DON'T REMOVE THIS LEAF FROM BOOK

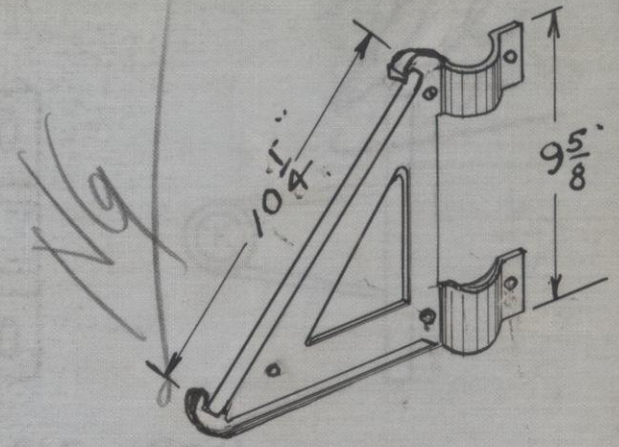

BRACKET FOR O.H. BANK.
RIGHT & LEFT.

PATTERN NO. 1014.

SEE B. P. NO. 503-C.

13

THE HAMILTON MFG. CO.

DON'T REMOVE THIS LEAF FROM BOOK

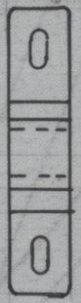

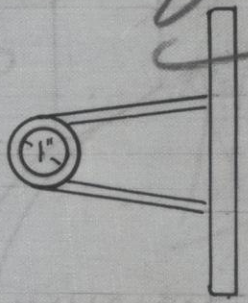

MALLEABLE IRON

PATTERN NO. 1013

SEE B. P. NO. 0013464-A

13

THE HAMILTON MFG. CO.

DON'T REMOVE THIS LEAF FROM BOOK

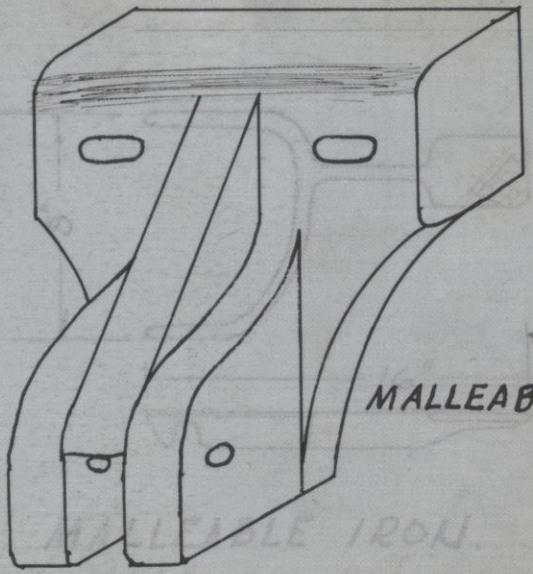

NG

MALLEABLE IRON

PATTERN NO. 1012

SEE B. P. NO. 0013464-A

13

THE HAMILTON MFG. CO.

DON'T REMOVE THIS LEAF FROM BOOK

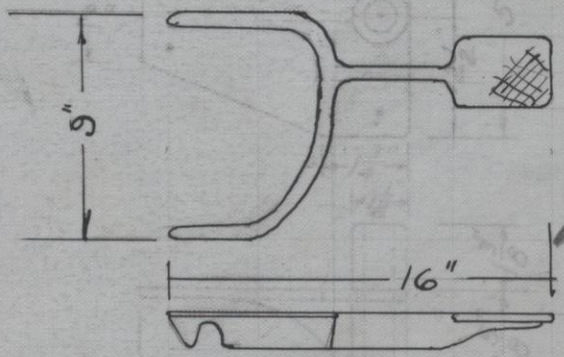

MALLEABLE IRON.

PATTERN NO. 1011

SEE B. P. NO. 0013464-A

THE HAMILTON MFG. CO.

DON'T REMOVE THIS LEAF FROM BOOK

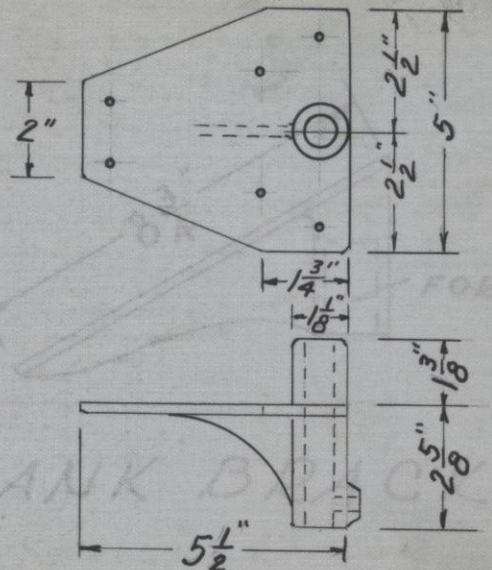

BRACKET FOR RAISING DEVICE

PATTERN NO. 1010

SEE B. P. NO. 19071-H

12

THE HAMILTON MFG. CO.

DON'T REMOVE THIS LEAF FROM BOOK

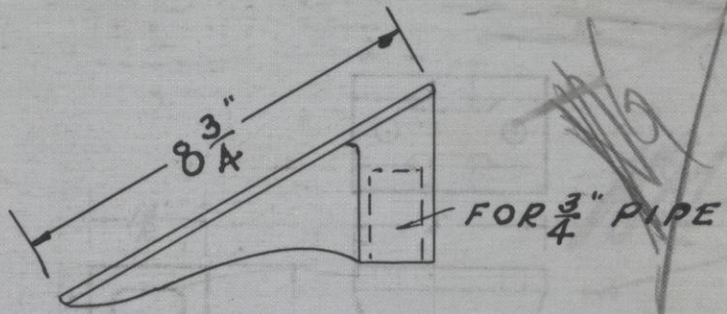

BANK BRACKET.

PATTERN NO. 1009

SEE B. P. NO. 0012494-A

THE HAMILTON MFG. CO.

DON'T REMOVE THIS LEAF FROM BOOK

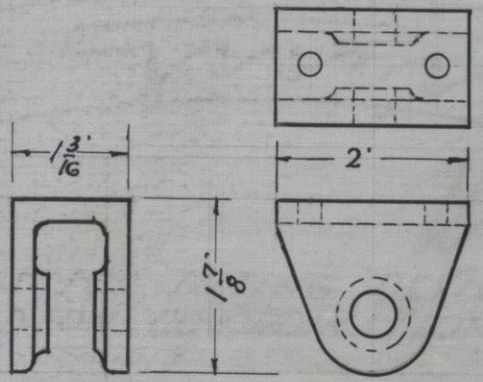

CAST IRON PIVOT ARM SUPPORT
FOR TILTING DEVICE ON CO-ORDINATION TABLE

PATTERN NO. 1008

SEE B. P. NO. 502-C

THE HAMILTON MFG. CO.

DON'T REMOVE THIS LEAF FROM BOOK

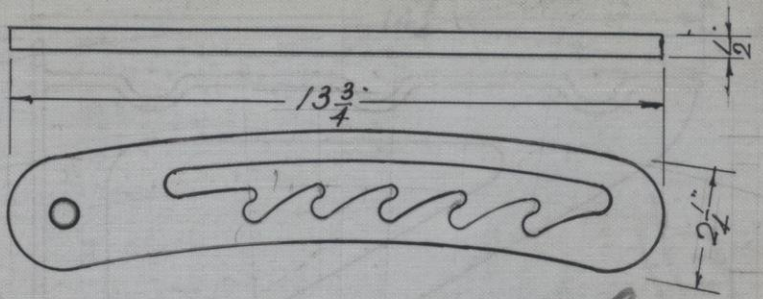

WJ

ARM FOR TILTING DEVICE
USED ON CO-ORDINATION TABLE

PATTERN NO. 1007

SEE B. P. NO. 501-C

14

THE HAMILTON MFG. CO.

DON'T REMOVE THIS LEAF FROM BOOK

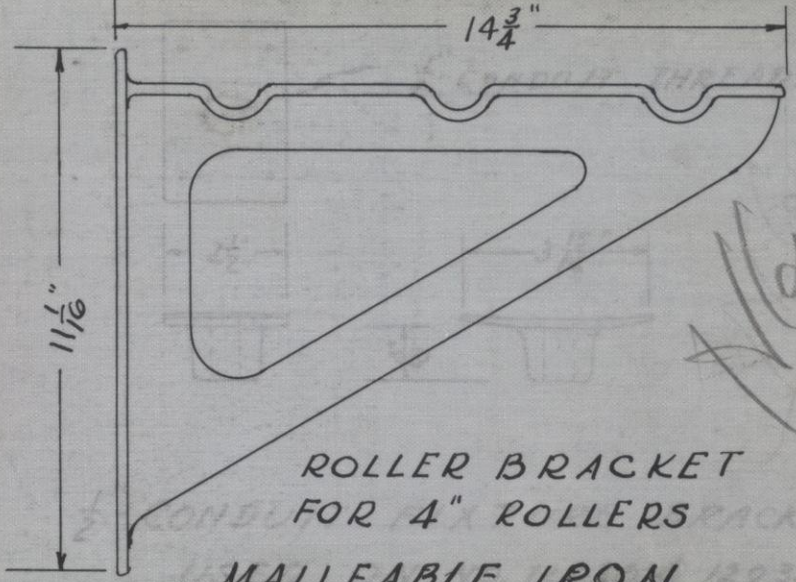

ROLLER BRACKET
FOR 4" ROLLERS
MALLEABLE IRON.

PATTERN NO. 1006

SEE B. P. NO. 0012846

THE HAMILTON MFG. CO.

DON'T REMOVE THIS LEAF FROM BOOK

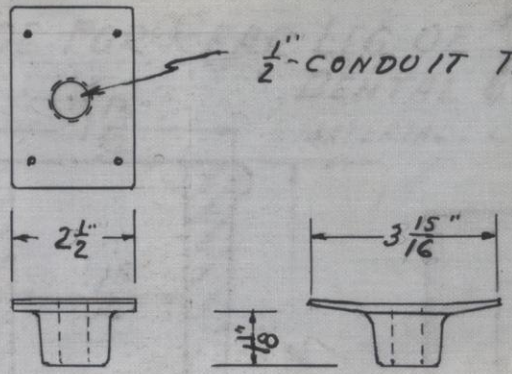

1/2"-CONDUIT FIXTURE BRACKET

USED ON NO. 12030 & 12035 CABINETS

PATTERN NO. 1005

SEE B. P. NO. 500-C

13

THE HAMILTON MFG. CO.

DON'T REMOVE THIS LEAF FROM BOOK

SHOE FOR REAR LEG OF #150 DENTAL CAB'T.

MATERIAL: CAST IRON.

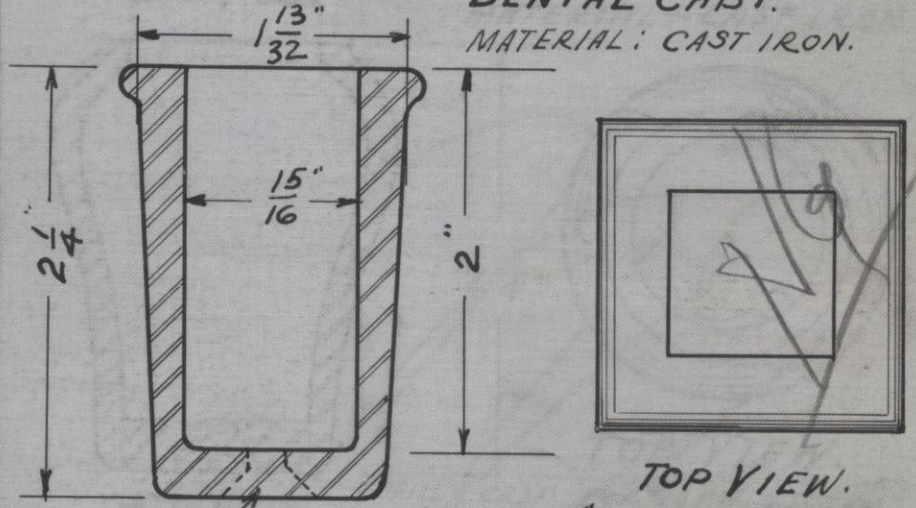

PATTERN NO. 1004.

SEE B. P. NO. 150-E.

13

THE HAMILTON MFG. CO.

DON'T REMOVE THIS LEAF FROM BOOK

SHOE FOR FRONT LEG OF #150 DENTAL CAB'T.

MATERIAL ÷ CAST IRON.

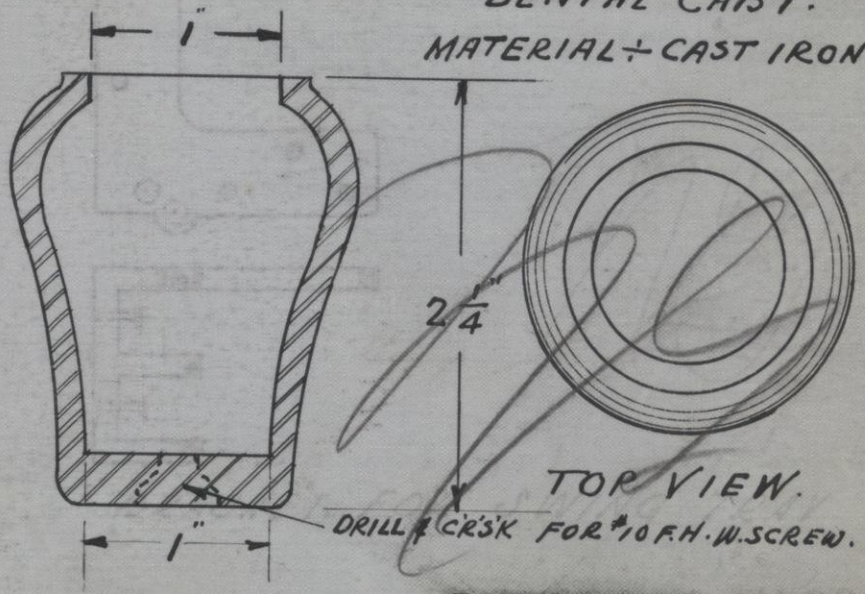

PATTERN NO. 1003.

SEE B. P. NO. 150-J.

13

THE HAMILTON MFG. CO.

DON'T REMOVE THIS LEAF FROM BOOK

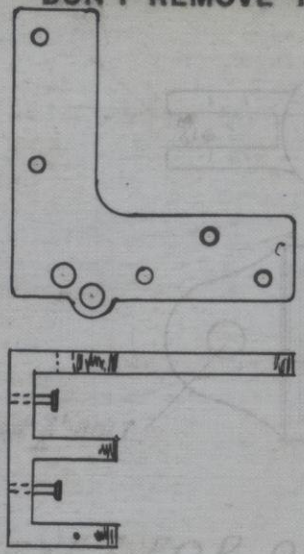

BRACKET FOR SWING TRAY

PATTERN NO. 1002

SEE B. P. NO. 499-C

12-28-28

13

THE HAMILTON MFG. CO.

DON'T REMOVE THIS LEAF FROM BOOK

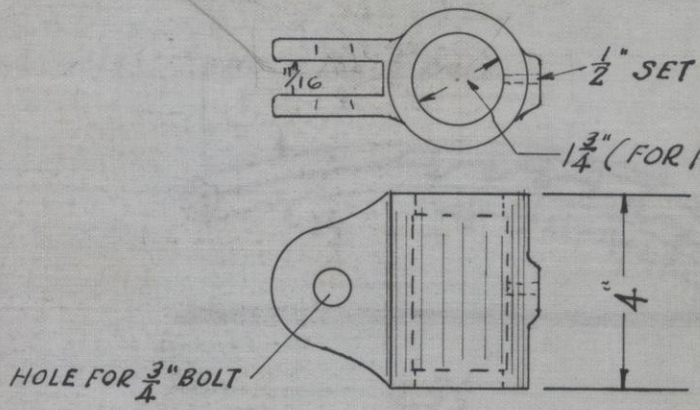

BRACKET FOR OVERHEAD BANK

PATTERN NO. 1001

SEE B. P. NO. 498-C

13

THE HAMILTON MFG. CO.

DON'T REMOVE THIS LEAF FROM BOOK

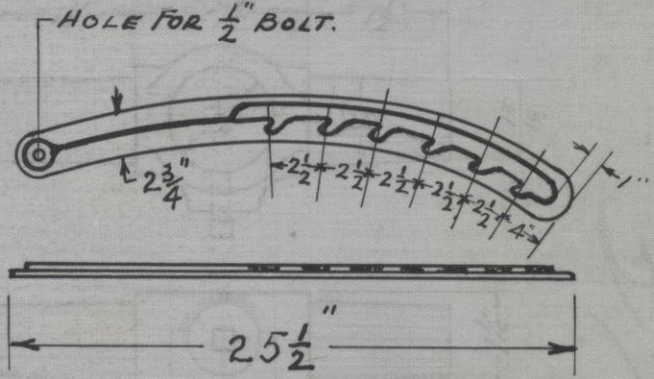

PATTERN NO. 999.

SEE B. P. NO.

No Working Drw. Made.

THE HAMILTON MFG. CO.

DON'T REMOVE THIS LEAF FROM BOOK

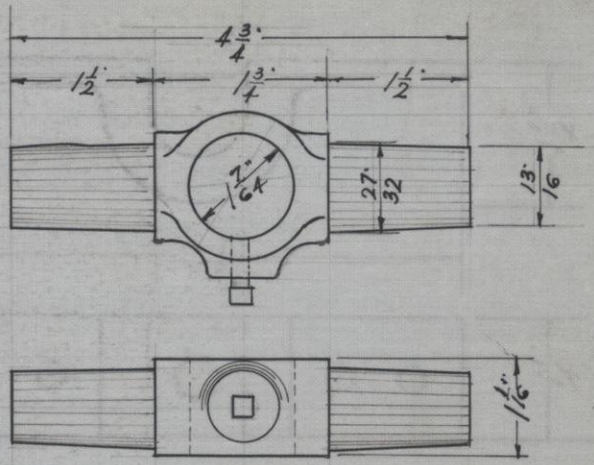

FOR 3/4" PIPE.

PATTERN NO. 997

SEE B. P. NO. 497-C

THE HAMILTON MFG. CO.

DON'T REMOVE THIS LEAF FROM BOOK

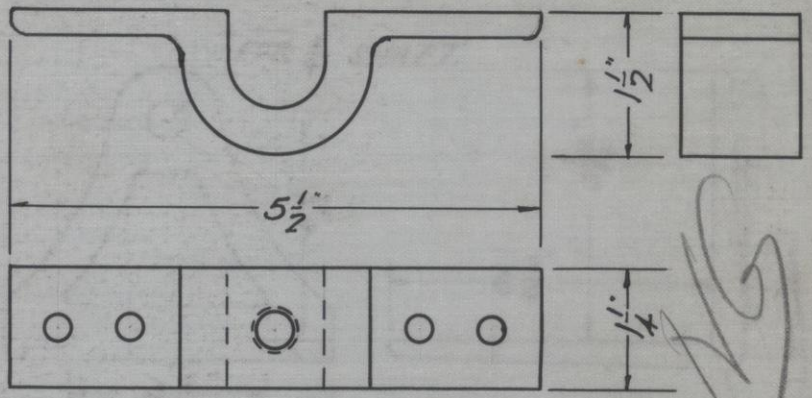

BEARING FOR GALLEY TRUCK

PATTERN NO. 996

SEE B. P. NO. 496-C.

OCT 31 1926

SK. 5-C-28.

12

THE HAMILTON MFG. CO.

DON'T REMOVE THIS LEAF FROM BOOK

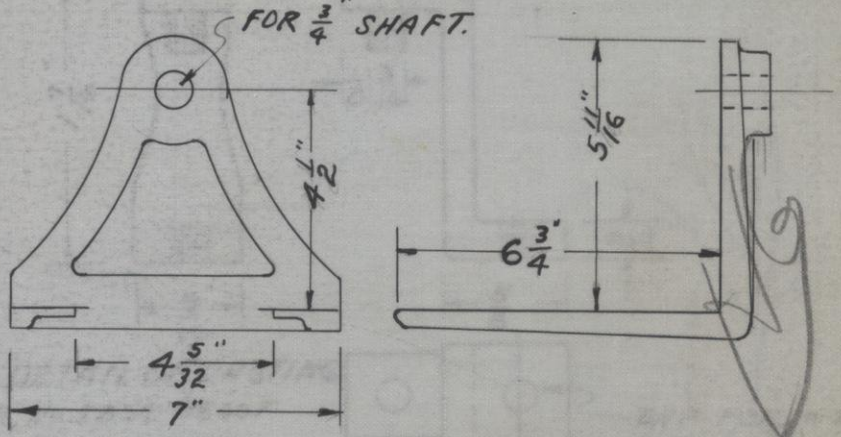

BEARING FOR FINDEX CRADLE

PATTERN NO. 995

SEE B. P. NO. 495-C

THE HAMILTON MFG. CO.

DON'T REMOVE THIS LEAF FROM BOOK

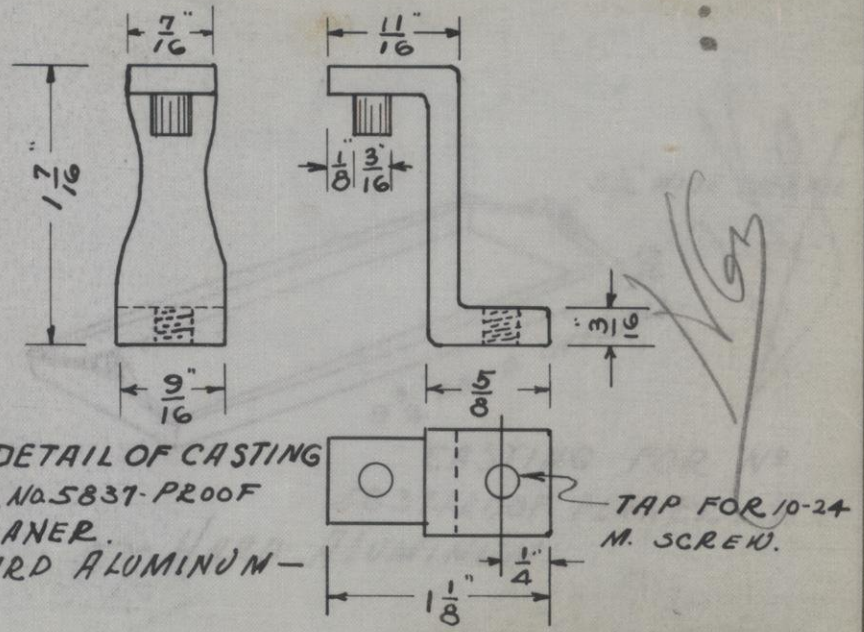

PATTERN NO. 993.

SEE B. P. NO. 5837-W

12

THE HAMILTON MFG. CO.

DON'T REMOVE THIS LEAF FROM BOOK

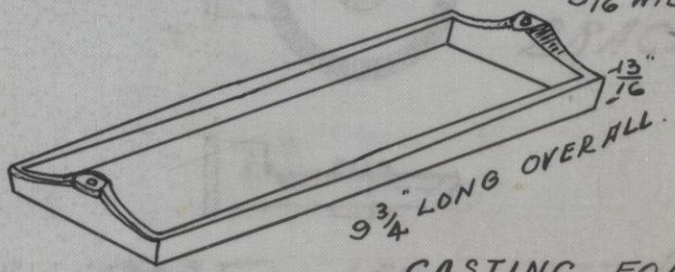

CASTING FOR No. 5837-PROOF PLANER.

~ HARD ALUMINUM.

PATTERN NO. 992.

SEE B. P. NO. 23293

THE HAMILTON MFG. CO.

DON'T REMOVE THIS LEAF FROM BOOK

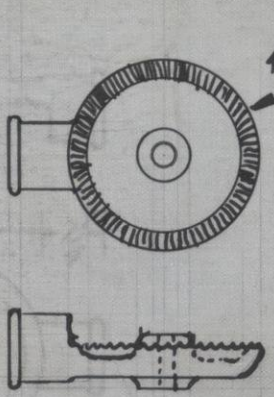

BRACKET

THIS CAST IRON CASTING IS USED TO TILT AN OVERHEAD BANK ON A DRAWING TABLE.

PATTERN NO. 991

SEE B. P. NO. 23189-C.

THE HAMILTON MFG. CO.

DON'T REMOVE THIS LEAF FROM BOOK

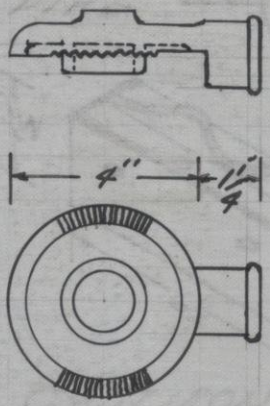

CAST IRON TOOTHED TILTING BRACKET FOR OVERHEAD BANK ON DRAWING TABLE.

PATTERN NO. 990

SEE B. P. NO. 23189-C.

THE HAMILTON MFG. CO.

DON'T REMOVE THIS LEAF FROM BOOK

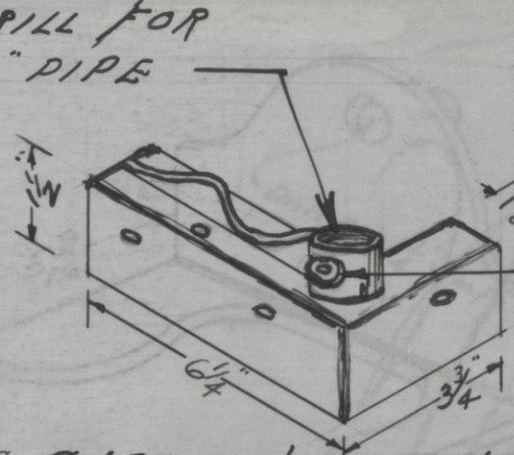

THIS CAST IRON CASTING IS FASTENED ON THE CORNER OF A DRAWING TABLE TO HOLD A PIPE STANDARD FOR AN OVERHEAD BANK.

PATTERN NO. 989

SEE B. P. NO. 23189 – C.

6

THE HAMILTON MFG. CO.

DON'T REMOVE THIS LEAF FROM BOOK

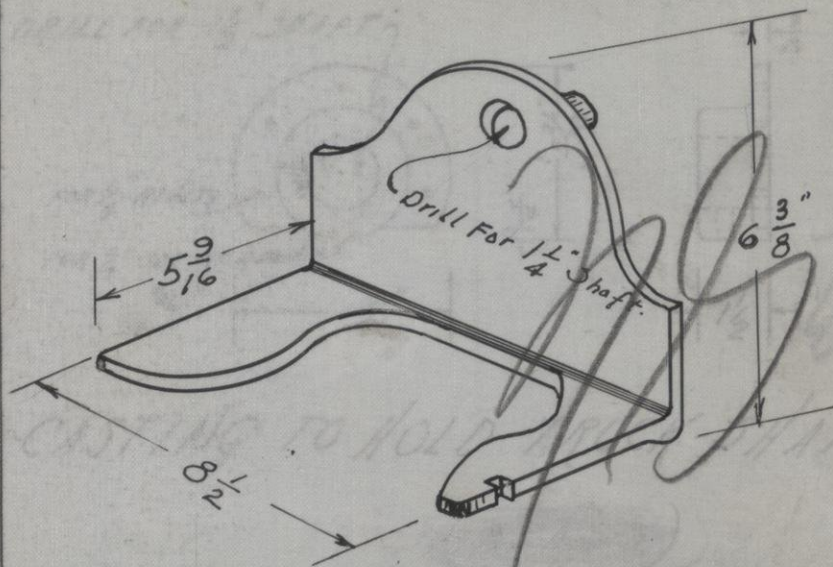

BEARING FOR 8X8 FINDEX SELECTRAY.

PATTERN NO. 987.

SEE B. P. NO. 493-C

THE HAMILTON MFG. CO.

DON'T REMOVE THIS LEAF FROM BOOK

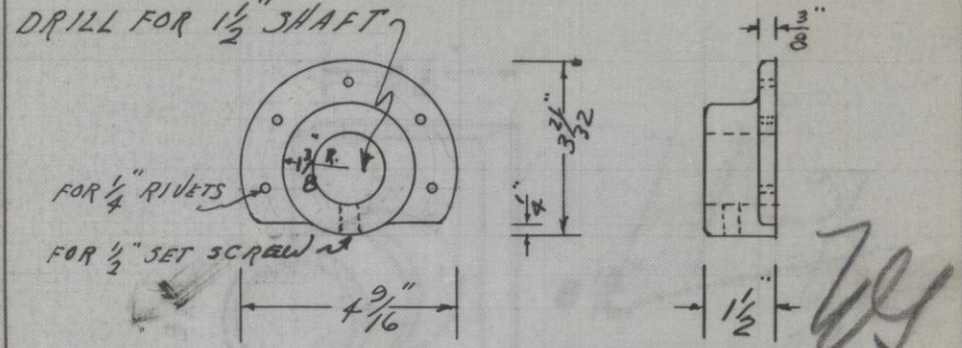

~CASTING TO HOLD TRUCK SHAFT~

(BRASS)

PATTERN NO. 986

SEE B. P. NO. 001241 1-A.

THE HAMILTON MFG. CO.

DON'T REMOVE THIS LEAF FROM BOOK

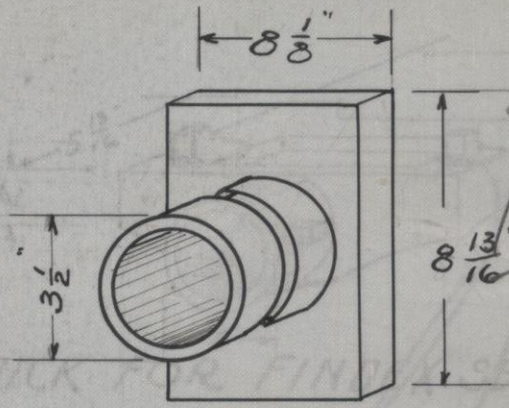

VG

BACK FOR SELECTRAY.

PATTERN NO. 980

SEE B. P. NO. 00/2425.

THE HAMILTON MFG. CO.

DON'T REMOVE THIS LEAF FROM BOOK

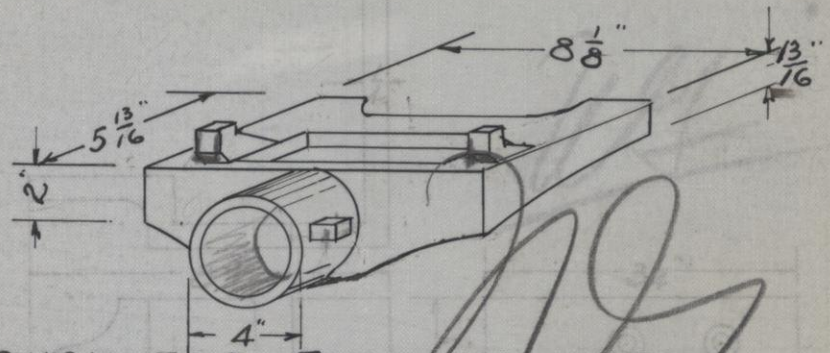

TRUCK FOR FINDEX SELECTRAY.

PATTERN NO. 979.

SEE B. P. NO. 0012425

12

THE HAMILTON MFG. CO.

DON'T REMOVE THIS LEAF FROM BOOK

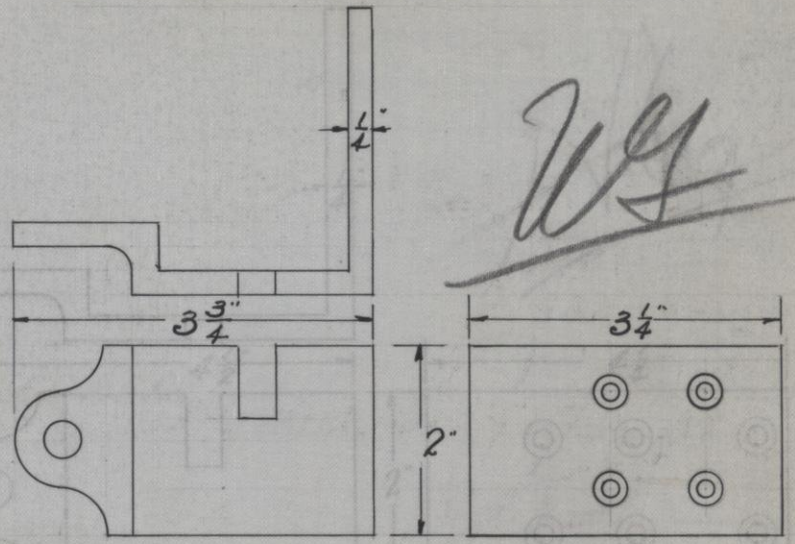

WG

BRASS GUIDE STRAP L. & R.

PATTERN NO. 978

SEE B. P. NO. B.P. No. 23048-B.

1.2

THE HAMILTON MFG. CO.

DON'T REMOVE THIS LEAF FROM BOOK

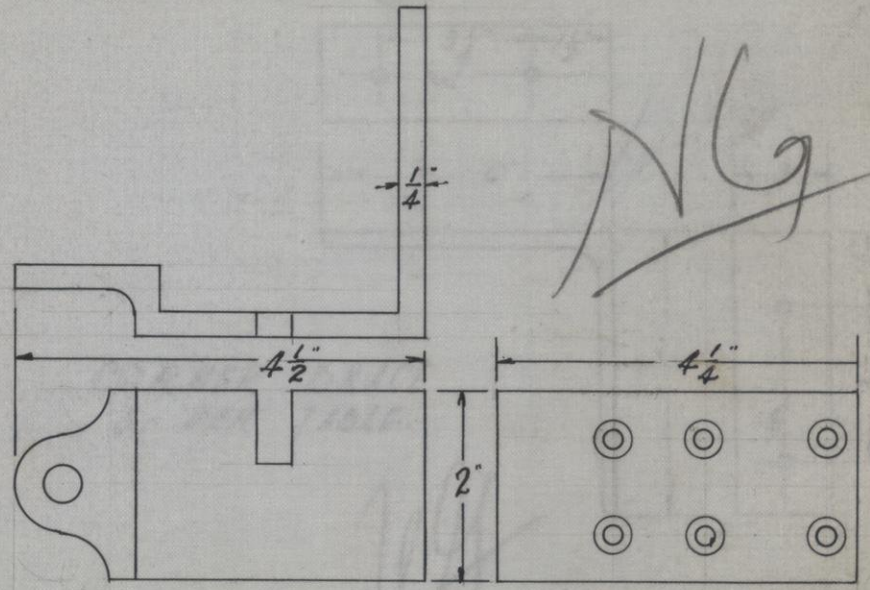

BRASS GUIDE STRAP L. & R.

PATTERN NO. 977

SEE B. P. NO. 23048 · B.

12

THE HAMILTON MFG. CO.

DON'T REMOVE THIS LEAF FROM BOOK

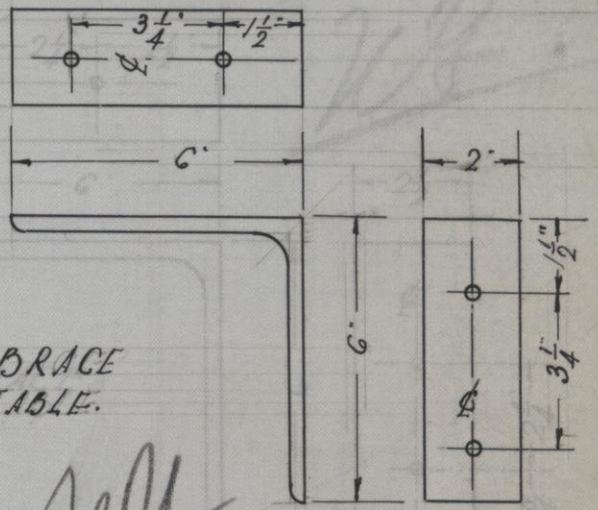

CORNER BRACE
3 - PER TABLE.

PATTERN NO. 975

SEE B. P. NO. 23048-A.

THE HAMILTON MFG. CO.

DON'T REMOVE THIS LEAF FROM BOOK

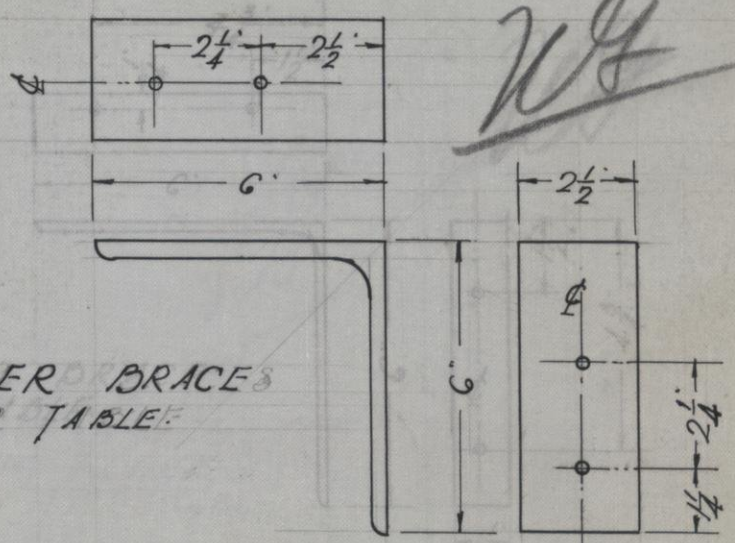

CORNER BRACE
A. PER TABLE.

PATTERN NO. 974

SEE B. P. NO. 23048-A.

12

THE HAMILTON MFG. CO.

DON'T REMOVE THIS LEAF FROM BOOK

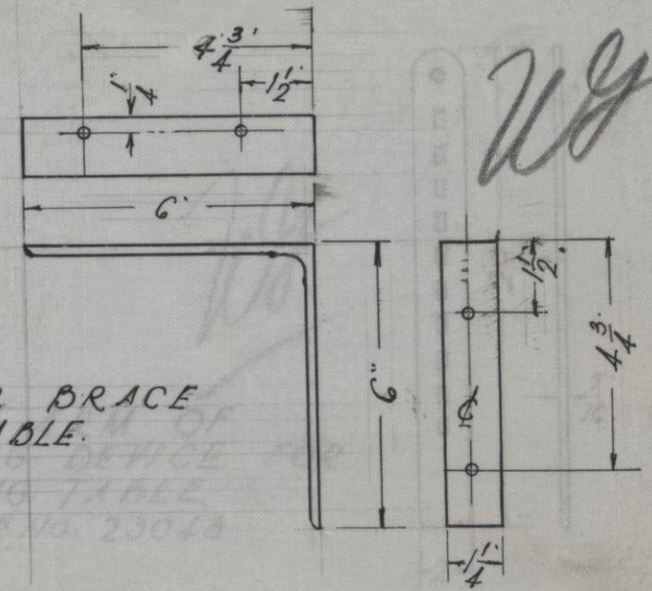

CORNER BRACE
1-PER TABLE.

PATTERN NO. 973

SEE B. P. NO. 23048-A.

THE HAMILTON MFG. CO.

DON'T REMOVE THIS LEAF FROM BOOK

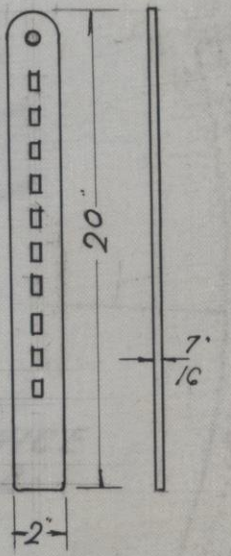

FRONT ARM OF
RAISING DEVICE FOR
DRAWING TABLE
PER B. P. NO. 23048

PATTERN NO. 972

SEE B. P. NO. 492-C.

THE HAMILTON MFG. CO.

DON'T REMOVE THIS LEAF FROM BOOK

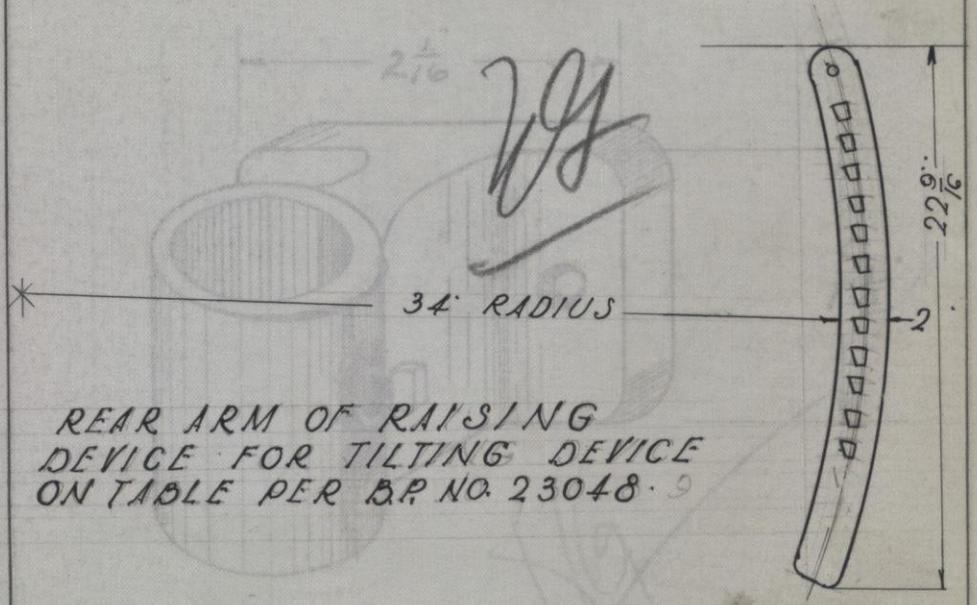

REAR ARM OF RAISING DEVICE FOR TILTING DEVICE ON TABLE PER B.P. NO. 23048.

PATTERN NO. 971

SEE B. P. NO. 492-C.

THE HAMILTON MFG. CO.

DON'T REMOVE THIS LEAF FROM BOOK

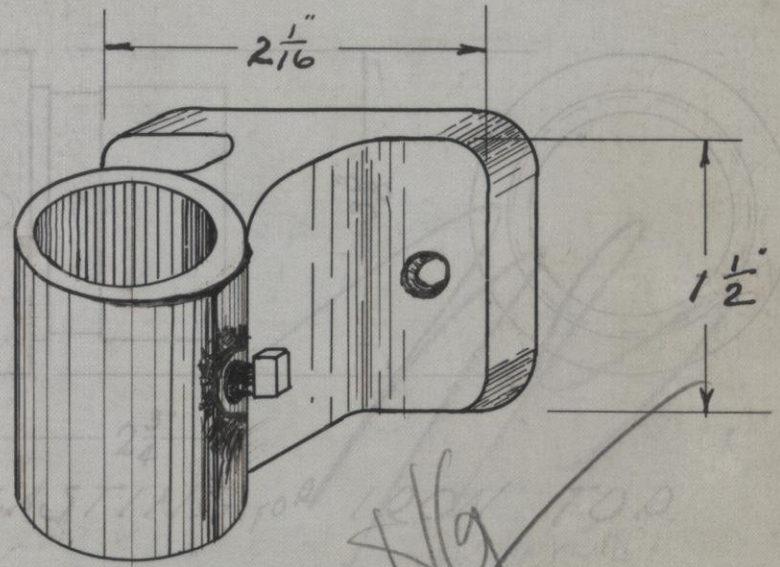

PATTERN NO. 964.

SEE B. P. NO. 485-C.

12

THE HAMILTON MFG. CO.

DON'T REMOVE THIS LEAF FROM BOOK

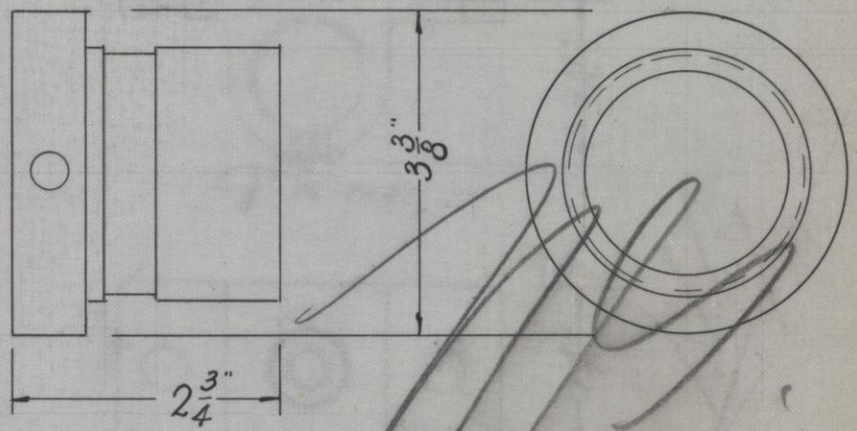

CASTING FOR IRON TOP.

Dr 15731-A

PATTERN NO. 963

SEE B. P. NO. 001914 Dw 1030

2-9-28 S.K.

12

THE HAMILTON MFG. CO.

DON'T REMOVE THIS LEAF FROM BOOK

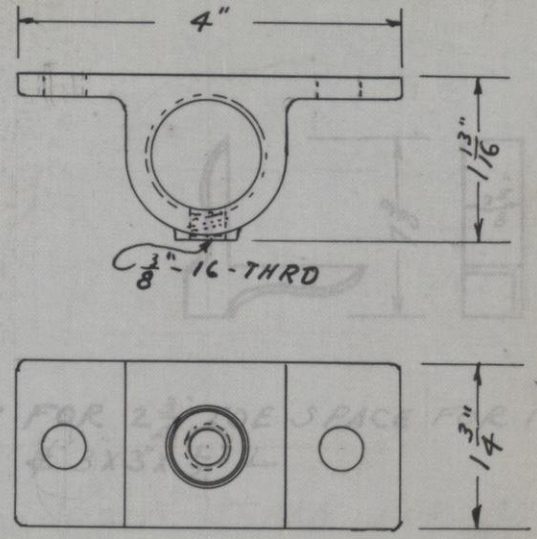

BRACKET FOR 3/4"-PIPE

PATTERN NO. 961

SEE B. P. NO. 484-C

THE HAMILTON MFG. CO.

DON'T REMOVE THIS LEAF FROM BOOK



FILLET FOR $2\frac{3}{4}$" TOE SPACE FOR $1\frac{3}{4}$"X3"X11GAL
& 3"X3"X $\frac{1}{2}$" L

PATTERN NO. 959 L.S.
959 R.S.

SEE B. P. NO. 482

AHM. 12-20-27.

12

THE HAMILTON MFG. CO.

DON'T REMOVE THIS LEAF FROM BOOK

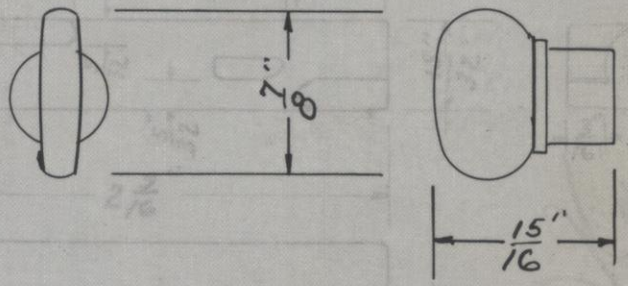

THUMB SCREW FOR BINDER

PATTERN NO. 958

SEE B. P. NO. 0011734

Thumb nut

THE HAMILTON MFG. CO.

DON'T REMOVE THIS LEAF FROM BOOK

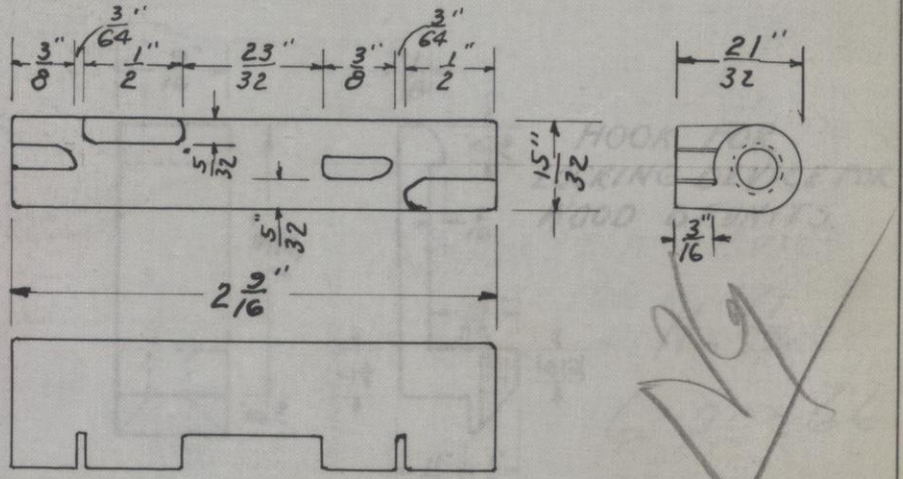

CAM SCREW FOR BINDER

PATTERN NO. 957

SEE B. P. NO. 0011734

THE HAMILTON MFG. CO.

DON'T REMOVE THIS LEAF FROM BOOK

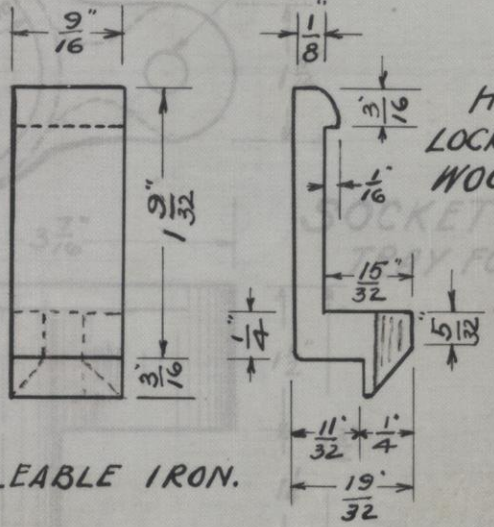

HOOK FOR LOCKING DEVICE FOR WOOD B.P. UNITS.

N. G.
6-20-66

MALLEABLE IRON.

PATTERN NO. 956.

SEE B. P. NO. 44 L.D.W.

Adm. 12-19-27.
NO WORKING DRAWING.

12

THE HAMILTON MFG. CO.

DON'T REMOVE THIS LEAF FROM BOOK

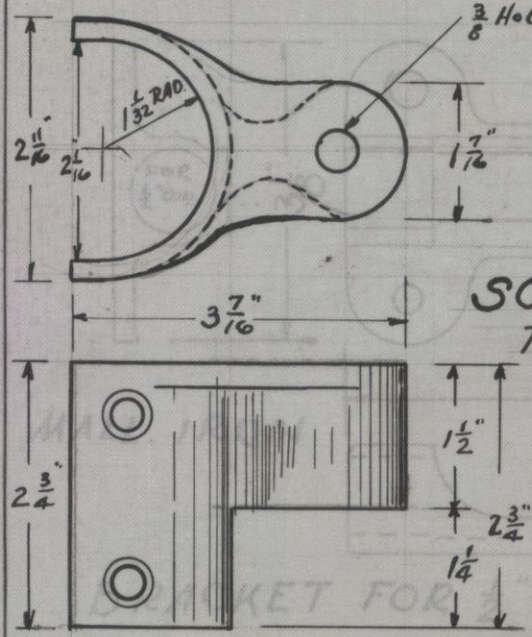

SOCKET FOR SWING TRAY FOR MAKE READY TABLE.

PATTERN NO. 955.

SEE B. P. NO. 481-C.

A.H.M. 11-15-27.

THE HAMILTON MFG. CO.

DON'T REMOVE THIS LEAF FROM BOOK

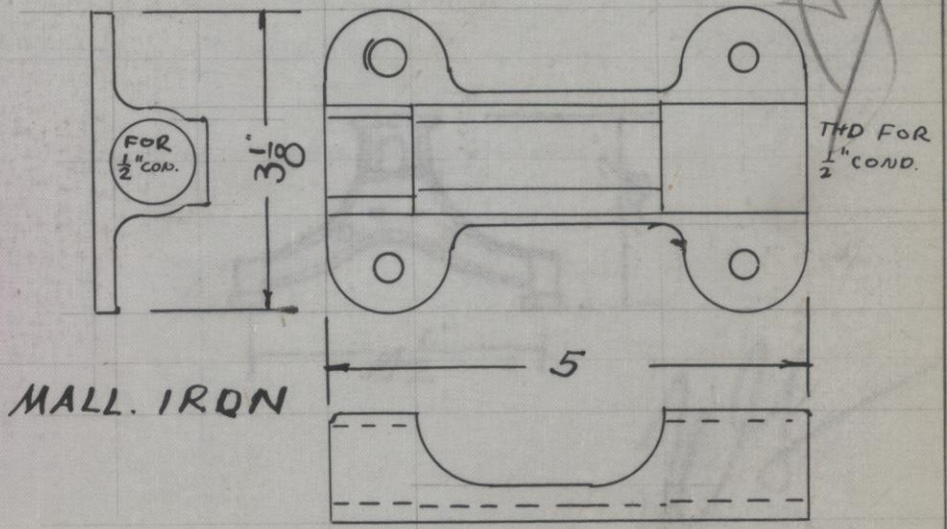

MALL. IRON

BRACKET FOR ½" CONDUIT

PATTERN NO. 954

SEE B. P. NO. 480 C.

THE HAMILTON MFG. CO.

DON'T REMOVE THIS LEAF FROM BOOK

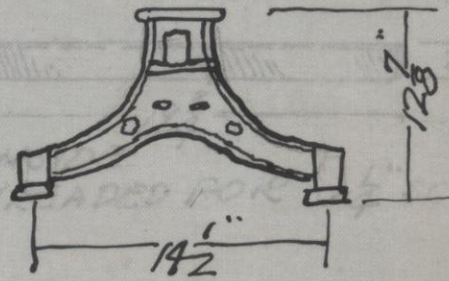

PATTERN NO. 953

SEE B. P. NO. 479-C

THE HAMILTON MFG. CO.

DON'T REMOVE THIS LEAF FROM BOOK

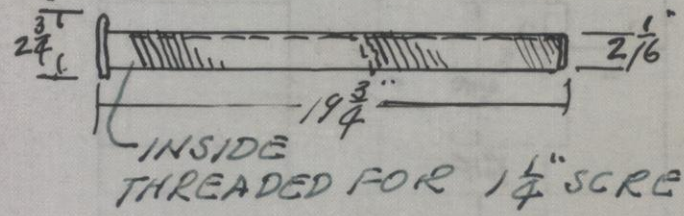

PATTERN NO. 952

SEE B. P. NO. 273-C

THE HAMILTON MFG. CO.

DON'T REMOVE THIS LEAF FROM BOOK

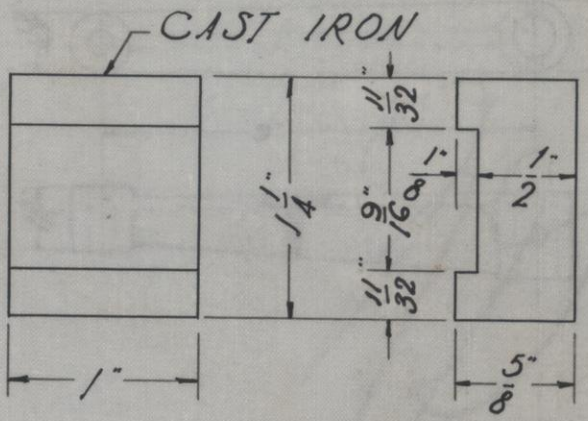

WEIGHT FOR LOCKING DEVICE FOR STEEL B.P. UNITS.

PATTERN NO. 950

SEE B. P. NO. 1849-A S.

12

THE HAMILTON MFG. CO.

DON'T REMOVE THIS LEAF FROM BOOK

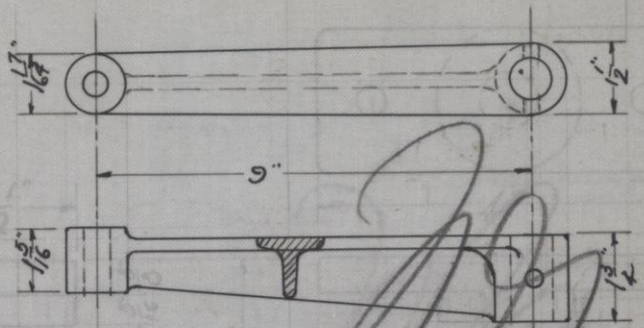

ARM FOR BREAKFAST TABLE

PIVOT CASTING FOR BREAKFAST TABLE

PATTERN NO. 947

SEE B. P. NO. 476-C

S.K. 3-9-27

12

THE HAMILTON MFG. CO.

DON'T REMOVE THIS LEAF FROM BOOK

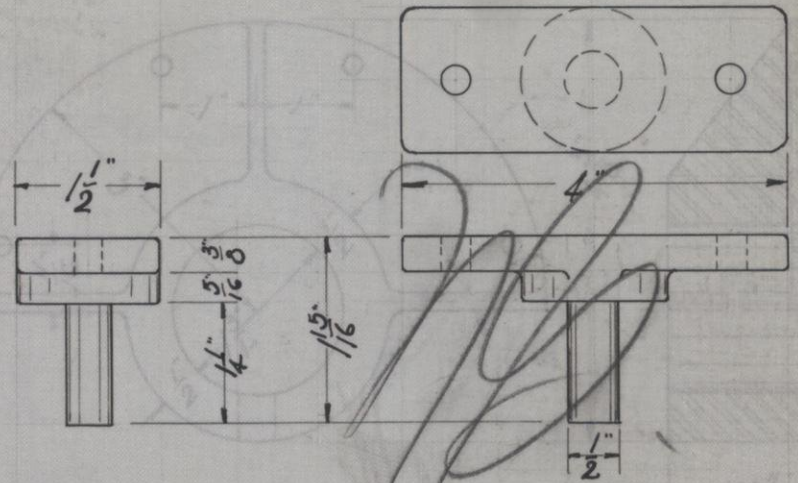

PIVOT CASTING FOR BREAKFAST TABLE

PATTERN NO. 946

SEE B. P. NO. 475-C.

J.K. 3-9-27

12

THE HAMILTON MFG. CO.

DON'T REMOVE THIS LEAF FROM BOOK

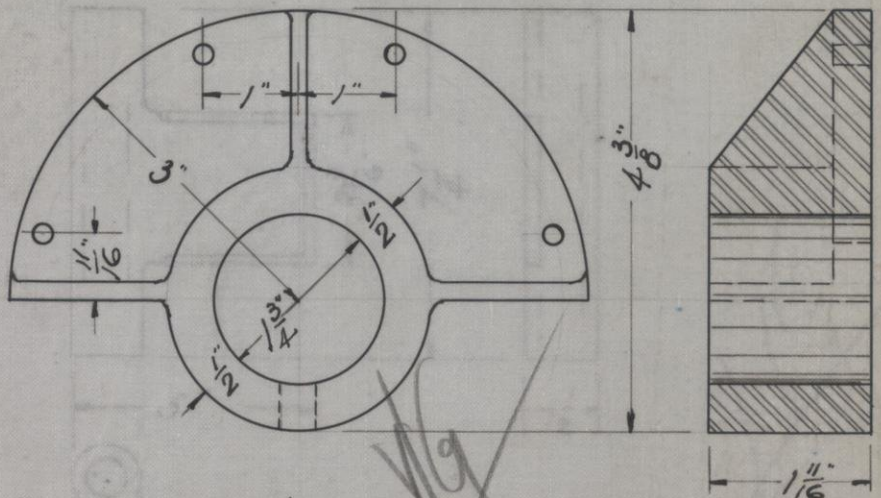

SPEC. FLANGE FOR No. 15116 ROLLER CAB'T

PATTERN NO. 929

SEE B. P. NO. 21-C.

13

THE HAMILTON MFG. CO.

DON'T REMOVE THIS LEAF FROM BOOK

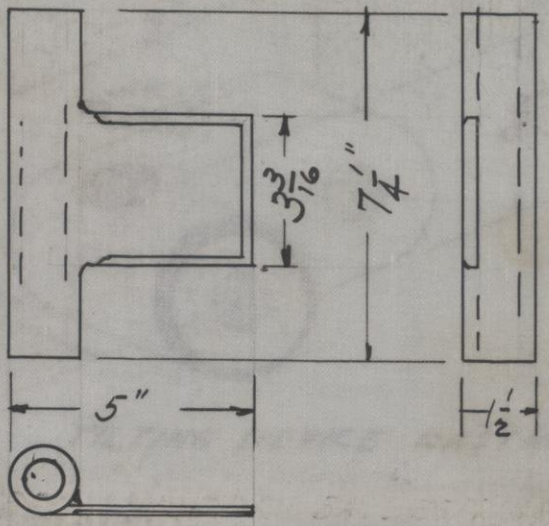

BRACKET FOR BALLBEARING STRAIGTH EDGE

PATTERN NO. 900

SEE B. P. NO. 0010456

THE HAMILTON MFG. CO.

DON'T REMOVE THIS LEAF FROM BOOK

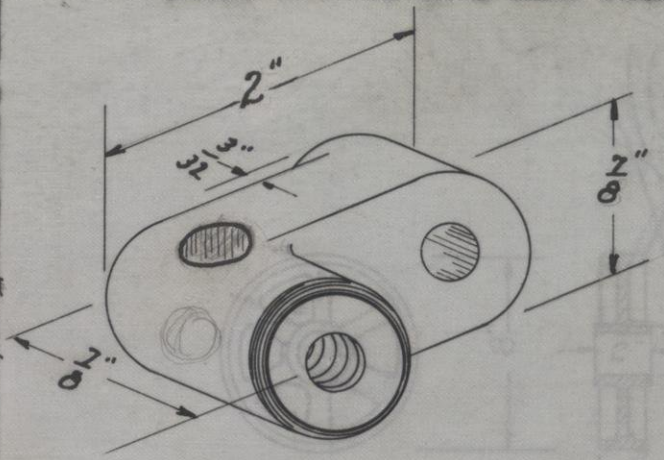

Revised 5-2035 Was 1 3/4" Long.

TILTING DEVICE CASTING

N. G.

PATTERN NO. 899

SEE B. P. NO. 268-W

REV. EK 5-11-29

THE HAMILTON MFG. CO.

DON'T REMOVE THIS LEAF FROM BOOK

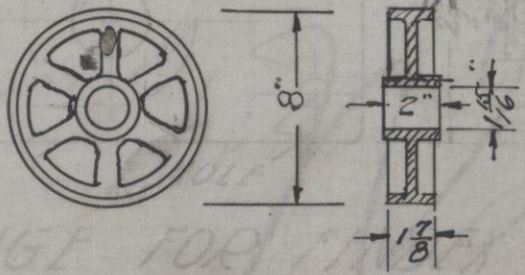

8" CAST IRON WHEEL FOR
HYATT ROLLER BEARING

PATTERN NO. 890

SEE B. P. NO. 468-C

11

THE HAMILTON MFG. CO.

DON'T REMOVE THIS LEAF FROM BOOK

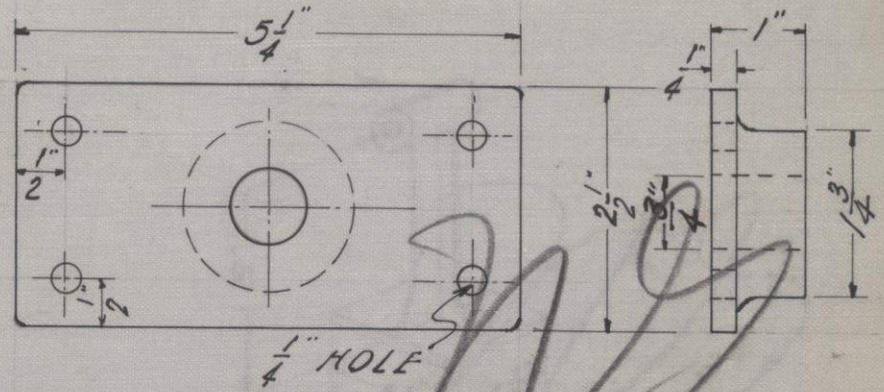

FLANGE FOR FINDER CRADLE

PATTERN NO. 881

SEE B. P. NO. 009229

REV. 6-24-26

JUL 12 1926

THE HAMILTON MFG. CO.

DON'T REMOVE THIS LEAF FROM BOOK

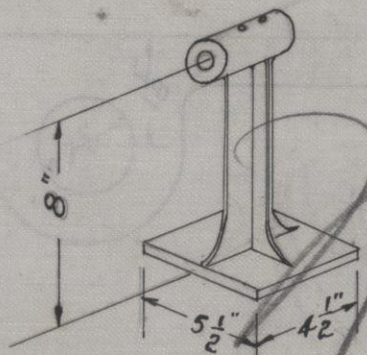

CASTING FOR
FINDEX CRADLE

PATTERN NO. 880

SEE B. P. NO. 009229

THE HAMILTON MFG. CO.

DON'T REMOVE THIS LEAF FROM BOOK

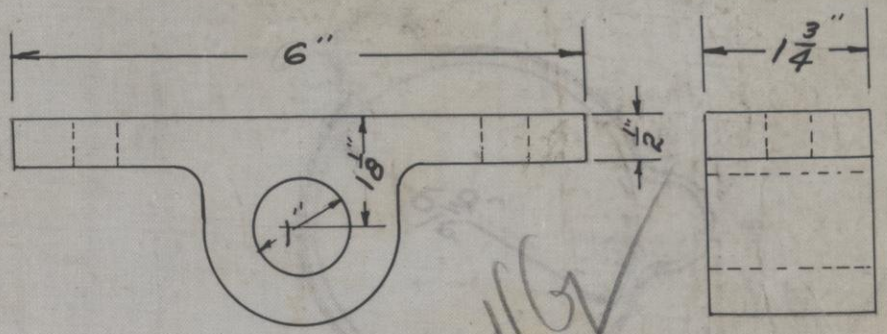

SHAFT BEARING FOR SPEC. TRUCK
PER B.P. NO. 008834

PATTERN NO 875

SEE B. P. NO. 460-C

THE HAMILTON MFG. CO.

DON'T REMOVE THIS LEAF FROM BOOK

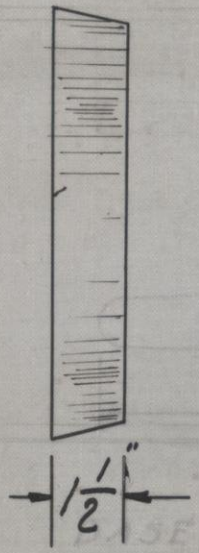

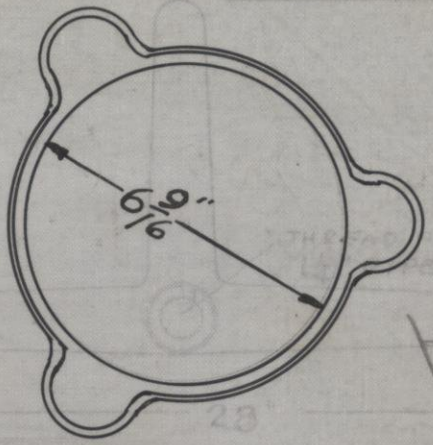

1/2"

STAND RING

PATTERN NO. 873

SEE B. P. NO. 009196

MAR 27 1928

THE HAMILTON MFG. CO.

DON'T REMOVE THIS LEAF FROM BOOK

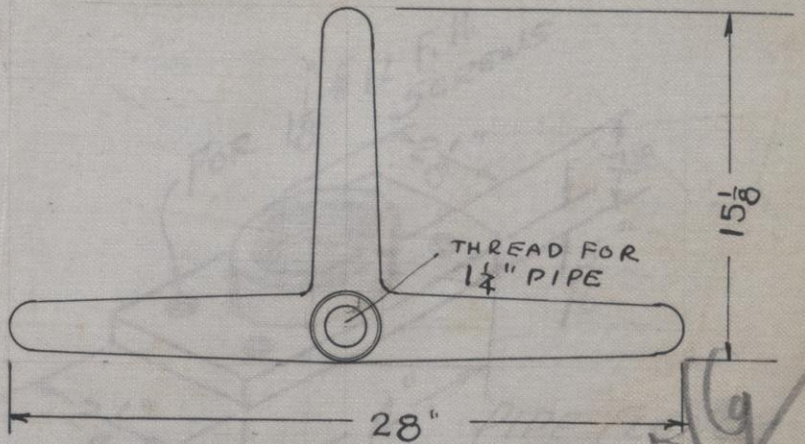

BASE FOR OVERHEAD BANK

PATTERN NO. 869

SEE B. P. NO. 009109A

THE HAMILTON MFG. CO.

DON'T REMOVE THIS LEAF FROM BOOK

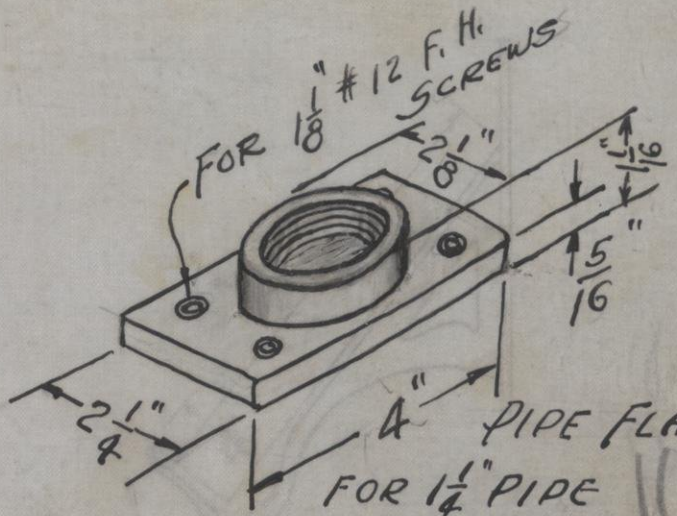

PATTERN NO. 868

SEE B. P. NO. 459-C

THE HAMILTON MFG. CO.

DON'T REMOVE THIS LEAF FROM BOOK

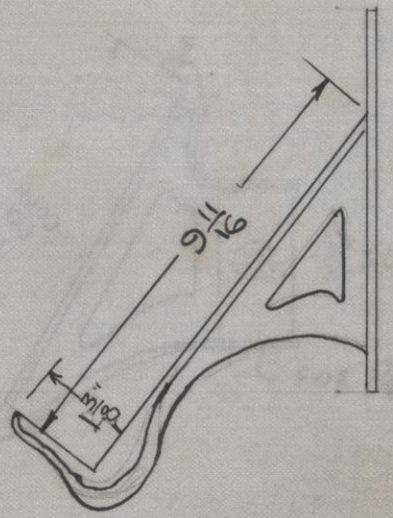

BRACKET FOR RACK B.P. NO. 007853

PATTERN NO. 863

SEE B. P. NO. 458C

THE HAMILTON MFG. CO.

DON'T REMOVE THIS LEAF FROM BOOK

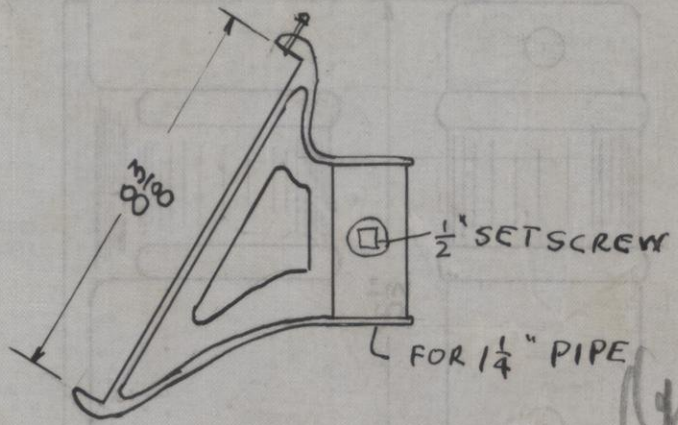

SOCKET FOR 1¼" PIPE

PATTERN NO. 862

SEE B. P. NO. 457C

THE HAMILTON MFG. CO.

DON'T REMOVE THIS LEAF FROM BOOK

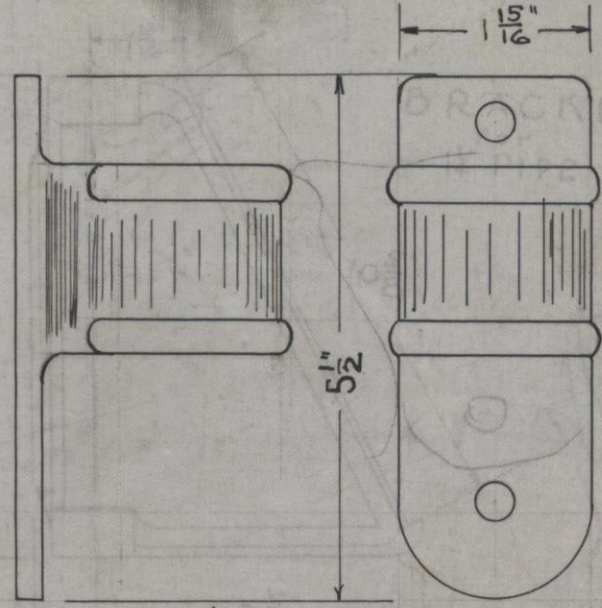

SOCKET FOR 1 1/4" PIPE 1" PROJECTION

PATTERN NO. 861

SEE B. P. NO. 466C

OLD No K 1040

THE HAMILTON MFG. CO.

DON'T REMOVE THIS LEAF FROM BOOK

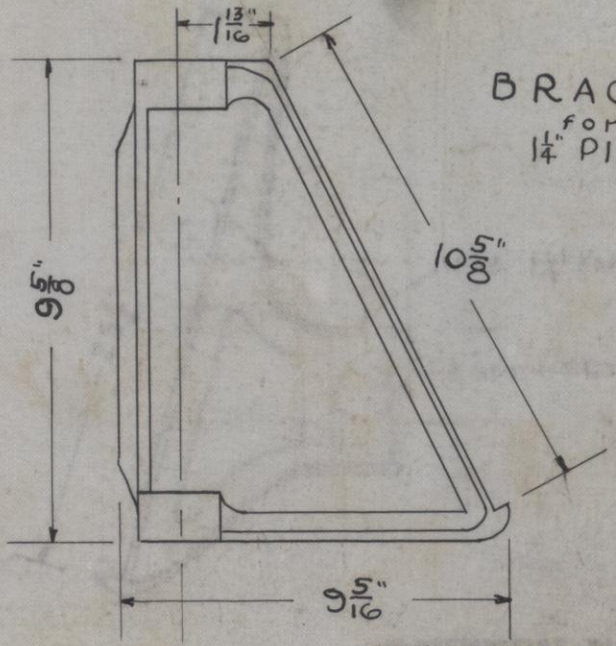

BRACKET
for
1 1/4" PIPE

PATTERN NO. 860

SEE B. P. NO. 466C
OLD NO K 1040

THE HAMILTON MFG. CO.

DON'T REMOVE THIS LEAF FROM BOOK

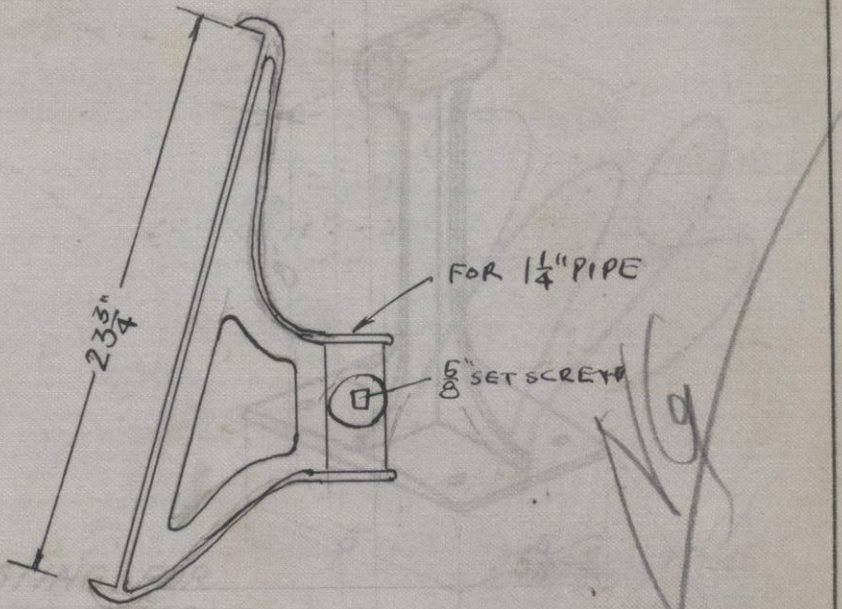

PATTERN NO. 858

SEE B. P. NO. 456-C

THE HAMILTON MFG. CO.

DON'T REMOVE THIS LEAF FROM BOOK

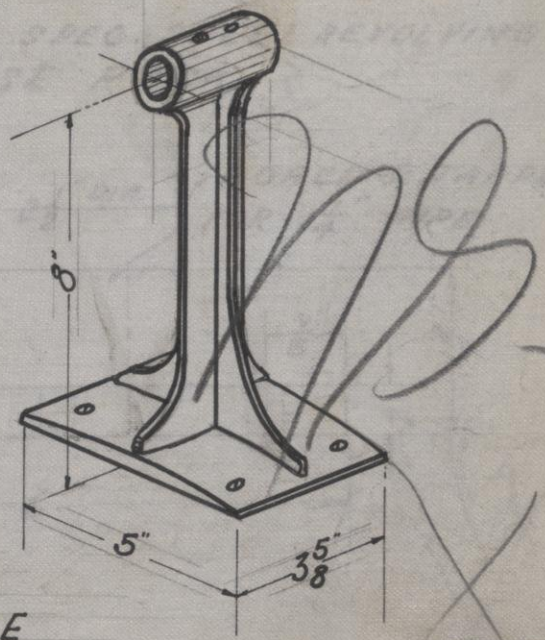

CASTING FOR
FINDEX CRADLE

PATTERN NO. 857.

SEE B. P. NO. [illegible]-788-F.X.A.

A.D. 12-5-24.

THE HAMILTON MFG. CO.

DON'T REMOVE THIS LEAF FROM BOOK

FLANGE FOR SPEC. STEEL REVOLVING LEAD CASE RACK.

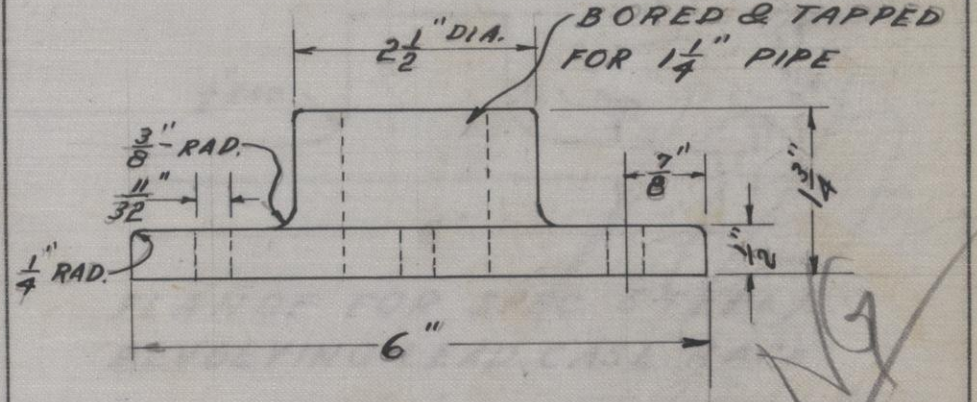

PATTERN NO. 856

SEE B. P. NO. 008043

THE HAMILTON MFG. CO.

DON'T REMOVE THIS LEAF FROM BOOK

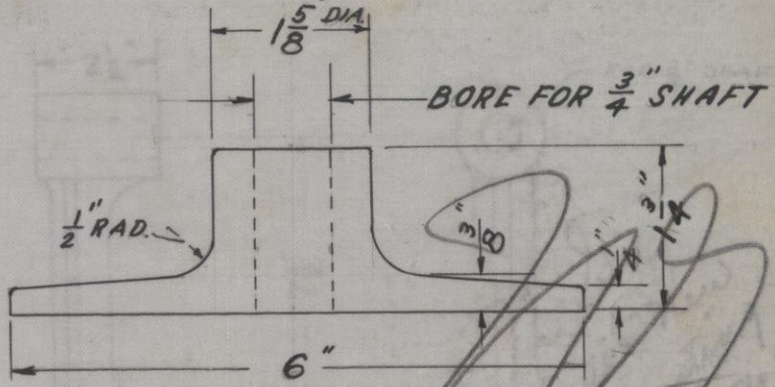

FLANGE FOR SPEC. STEEL
REVOLVING LEAD CASE RACK

PATTERN NO. 855

SEE B. P. NO. 008043

THE HAMILTON MFG. CO.

DON'T REMOVE THIS LEAF FROM BOOK

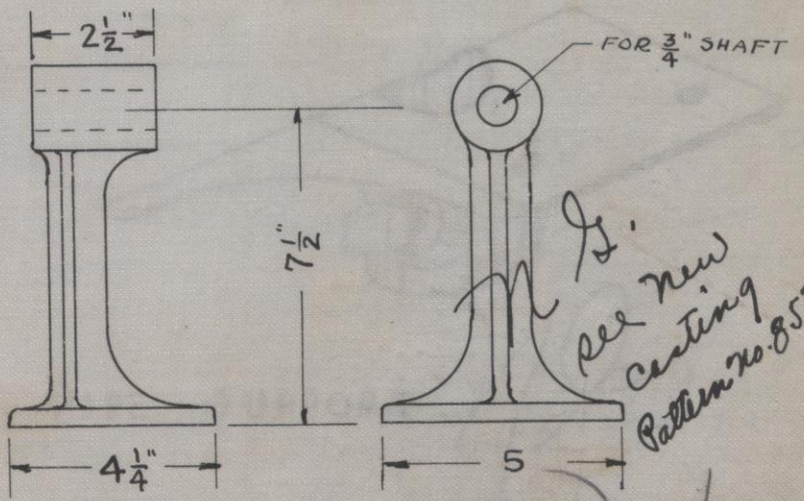

Is. see new casting Pattern No. 857.

CASTING for FINDEX CRADLE

PATTERN NO. 854

SEE B. P. NO. 455-C

11

THE HAMILTON MFG. CO.

DON'T REMOVE THIS LEAF FROM BOOK

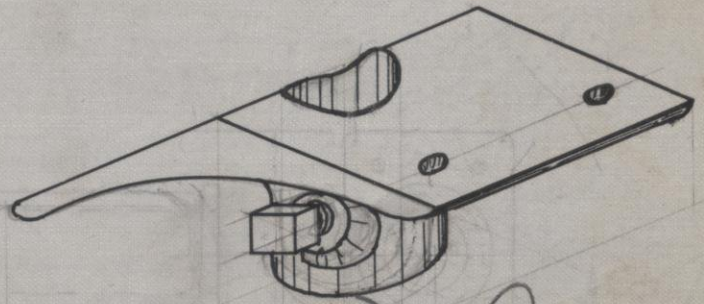

PIPE SUPPORT

PATTERN NO. 853

SEE B. P. NO. 008102

THE HAMILTON MFG. CO.

DON'T REMOVE THIS LEAF FROM BOOK

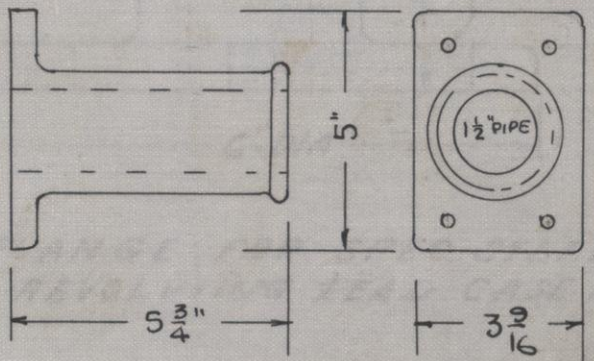

FLANGE FOR 1½" PIPE

PATTERN NO. 852

SEE B. P. NO. 454-C

11

THE HAMILTON MFG. CO.

DON'T REMOVE THIS LEAF FROM BOOK

BORE FOR 1" THREADED PIPE

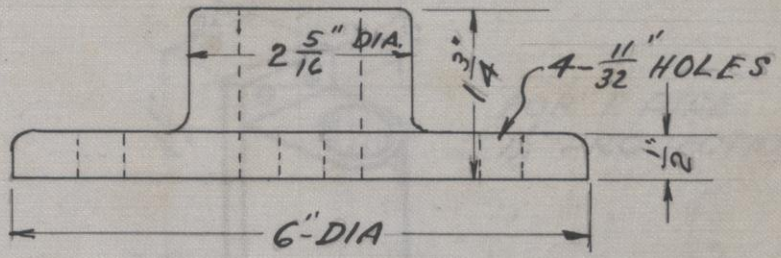

FLANGE FOR SPEC. STEEL
REVOLVIING LEAD CASE RACK

PATTERN NO. 851

SEE B. P. NO. 007985

THE HAMILTON MFG. CO.

DON'T REMOVE THIS LEAF FROM BOOK

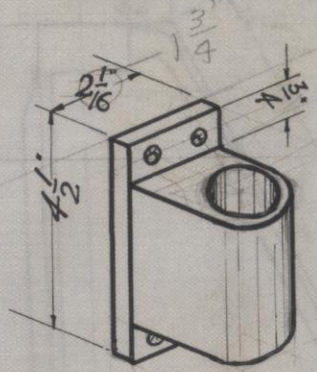

FOR 1" PIPE
1 1/8" PROJECTION

SOCKET FOR 1" PIPE.

PATTERN NO. 847

SEE B. P. NO. 453-C

A.D.

THE HAMILTON MFG. CO.

DON'T REMOVE THIS LEAF FROM BOOK

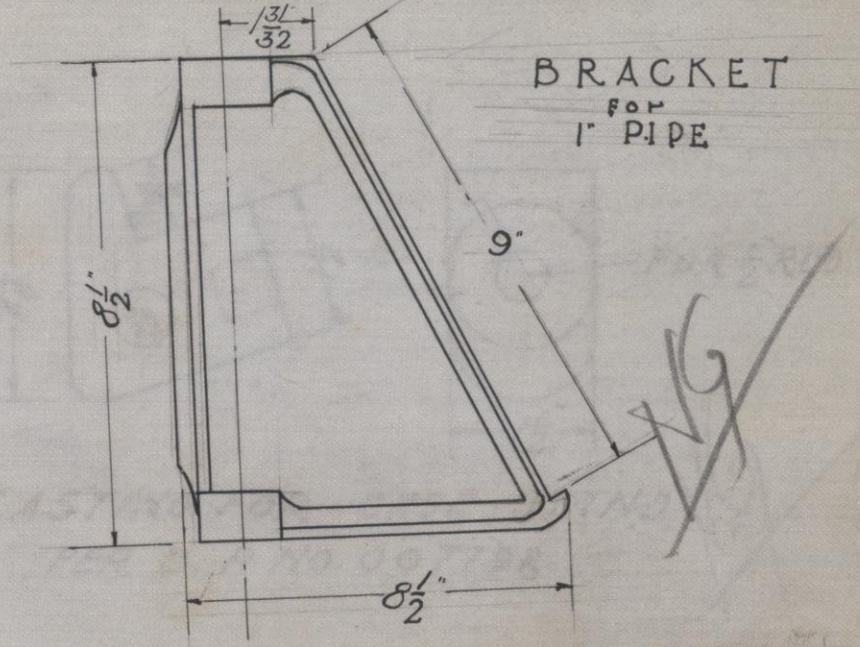

BRACKET
FOR
1" PIPE

PATTERN NO. 846

SEE B. P. NO. 452-C

THE HAMILTON MFG. CO.

DON'T REMOVE THIS LEAF FROM BOOK

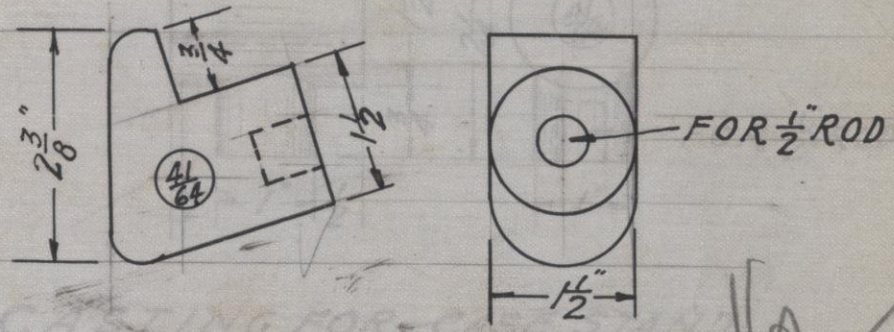

CASTING FOR CASE STAND

PER B. P. NO. 007798

PATTERN NO. 834

SEE B. P. NO. 450C

THE HAMILTON MFG. CO.

DON'T REMOVE THIS LEAF FROM BOOK

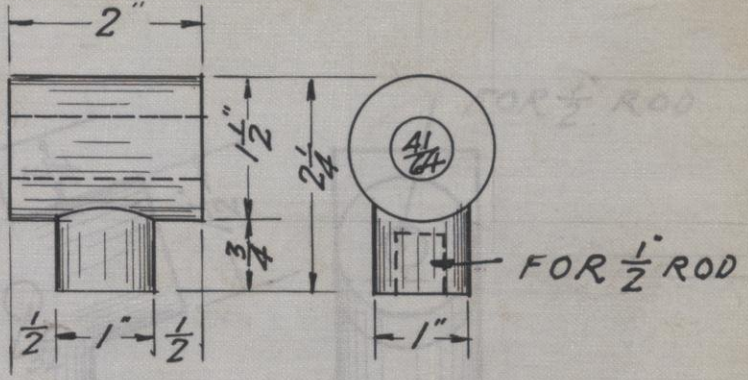

CASTING FOR CASE STAND

PER B.P. NO. D07798

PATTERN NO. 843

SEE B. P. NO. 449-C

THE HAMILTON MFG. CO.

DON'T REMOVE THIS LEAF FROM BOOK

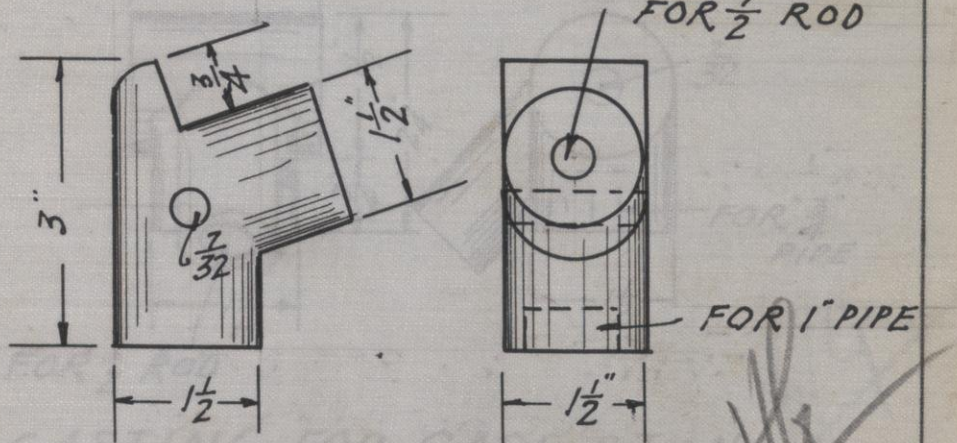

CASTING FOR CASE STAND

PER B. P. NO. 007798

PATTERN NO. 842

SEE B. P. NO. 448-C

THE HAMILTON MFG. CO.

DON'T REMOVE THIS LEAF FROM BOOK

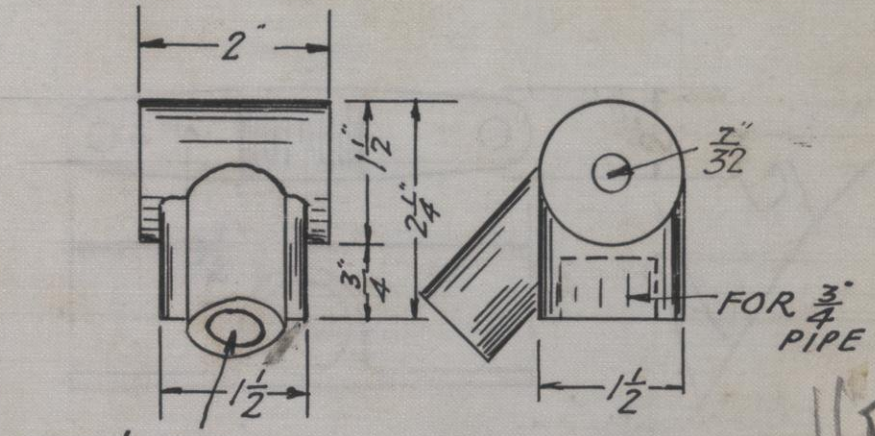

CASTING FOR CASE STAND

PER B. P. NO. 007798

PATTERN NO. 841

SEE B. P. NO. 447-C

THE HAMILTON MFG. CO.

DON'T REMOVE THIS LEAF FROM BOOK

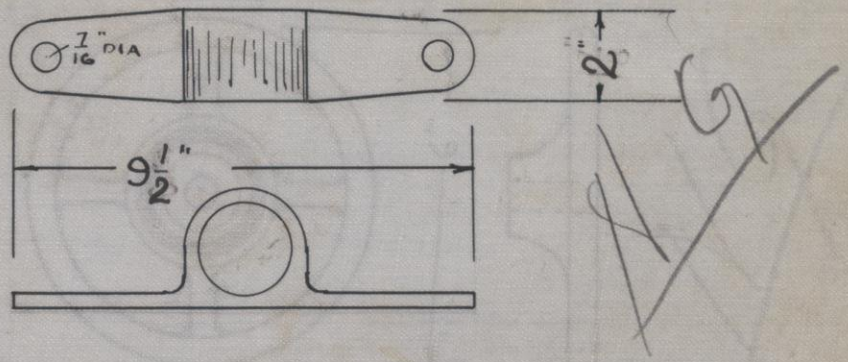

1 1/4" PIPE FLANGE WITH 7/16" OVERHANG

PATTERN NO. 839

SEE B. P. NO. 445-C

THE HAMILTON MFG. CO.

DON'T REMOVE THIS LEAF FROM BOOK

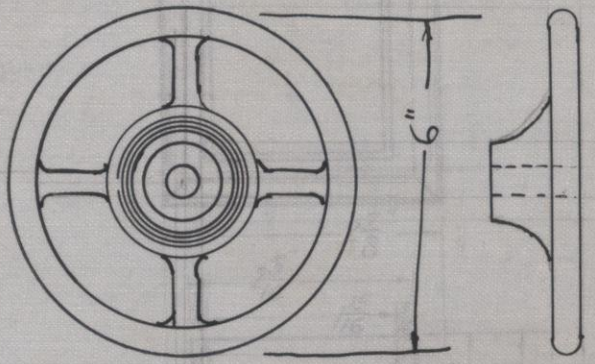

HAND WHEEL FOR NO 9218 TABLE

PATTERN NO. 837

SEE B. P. NO. 9218 AW

THE HAMILTON MFG. CO.

DON'T REMOVE THIS LEAF FROM BOOK

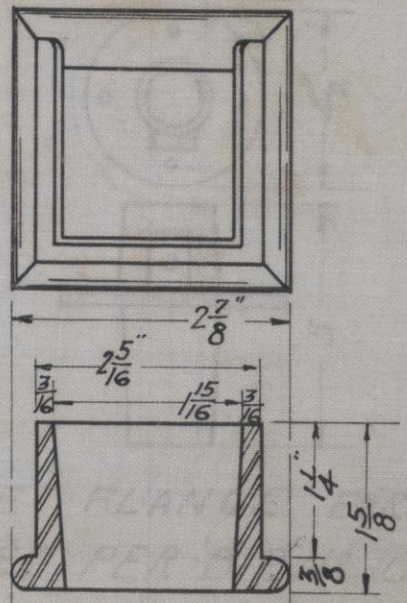

CAST IRON SHOE FOR 2 1/2" LEG

PATTERN NO. 836

SEE B. P. NO. 443

THE HAMILTON MFG. CO.

DON'T REMOVE THIS LEAF FROM BOOK

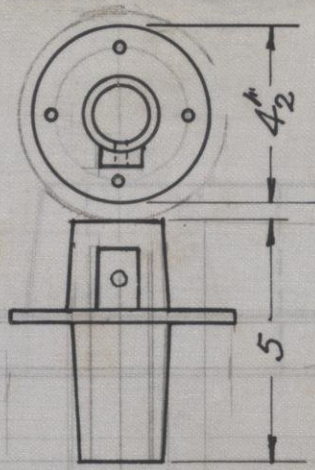

SOCKET FLANGE FOR ROLLER CABINET PER B.P.No. 00711.

PATTERN NO. 835

SEE B. P. NO. 442-C

THE HAMILTON MFG. CO.

DON'T REMOVE THIS LEAF FROM BOOK

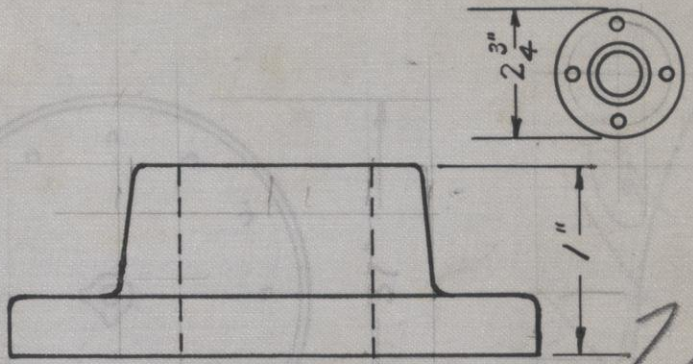

FLANGE FOR ROLLER CAB'T.
PER B.P.NO. 007111

PATTERN NO. 834

SEE B. P. NO. 441-C

THE HAMILTON MFG. CO.

DON'T REMOVE THIS LEAF FROM BOOK

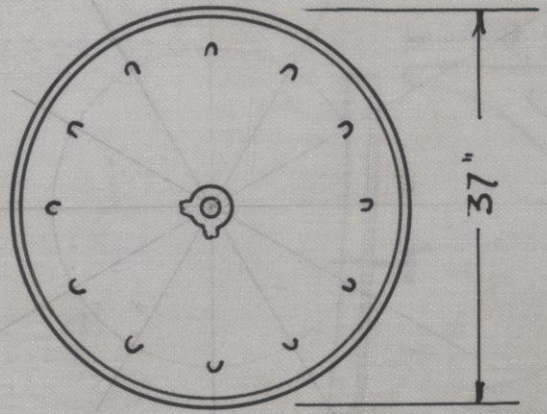

CASTING FOR ROLLER CABINET 007001

PATTERN NO. 832

SEE B. P. NO. 439-C

THE HAMILTON MFG. CO.

DON'T REMOVE THIS LEAF FROM BOOK

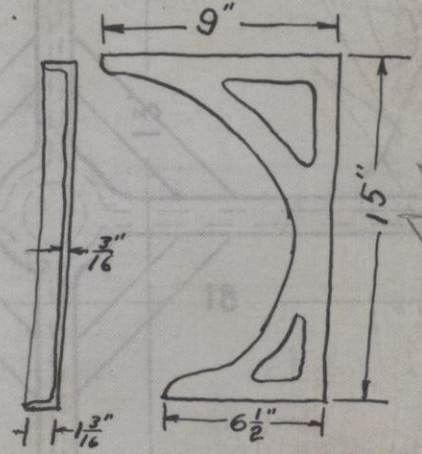

PATTERN NO. 831

SEE B. P. NO. 438-C

THE HAMILTON MFG. CO.

DON'T REMOVE THIS LEAF FROM BOOK

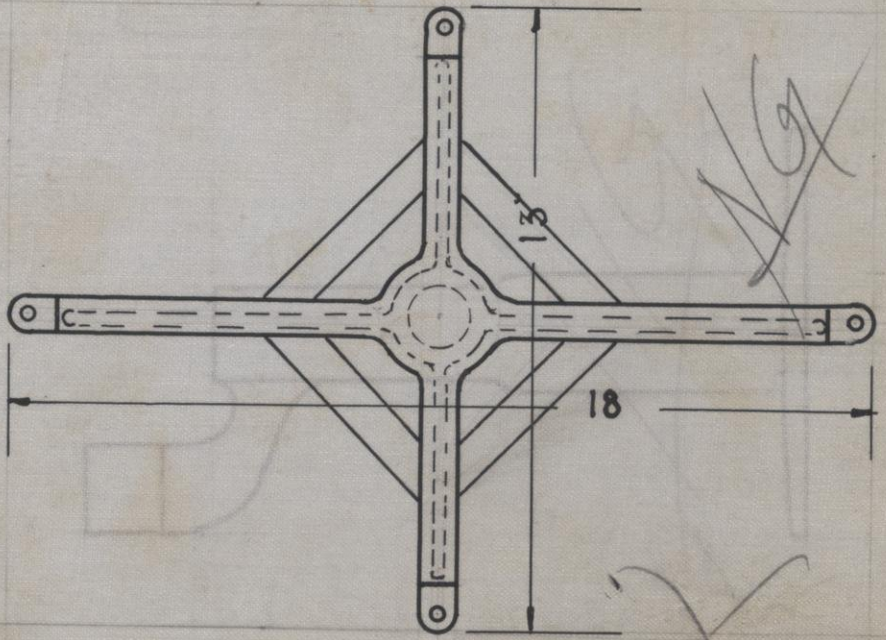

PATTERN NO. 830

SEE B. P. NO. 9216-A W

THE HAMILTON MFG. CO.

DON'T REMOVE THIS LEAF FROM BOOK

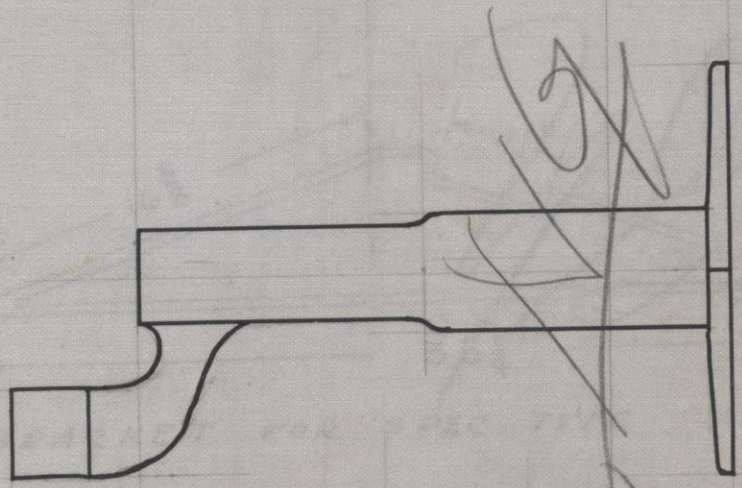

PATTERN NO. 829

SEE B. P. NO. 9216-A-W

THE HAMILTON MFG. CO.

DON'T REMOVE THIS LEAF FROM BOOK

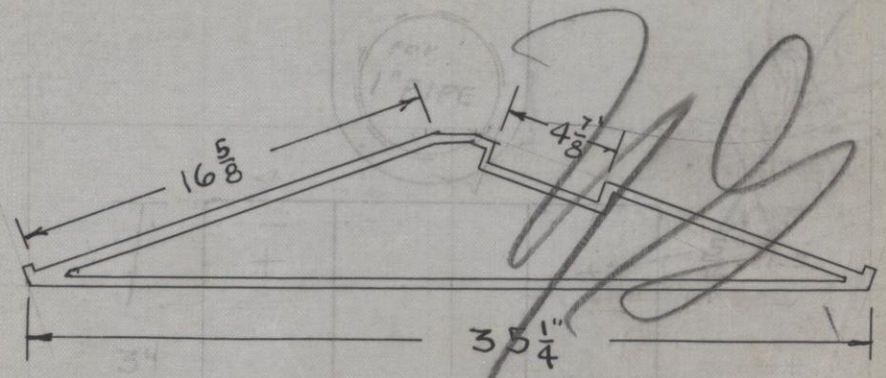

BRACKET FOR SPEC. TYPE CAB'T

PATTERN NO. 824

SEE B. P. NO. 002-0015-0016

THE HAMILTON MFG. CO.

DON'T REMOVE THIS LEAF FROM BOOK

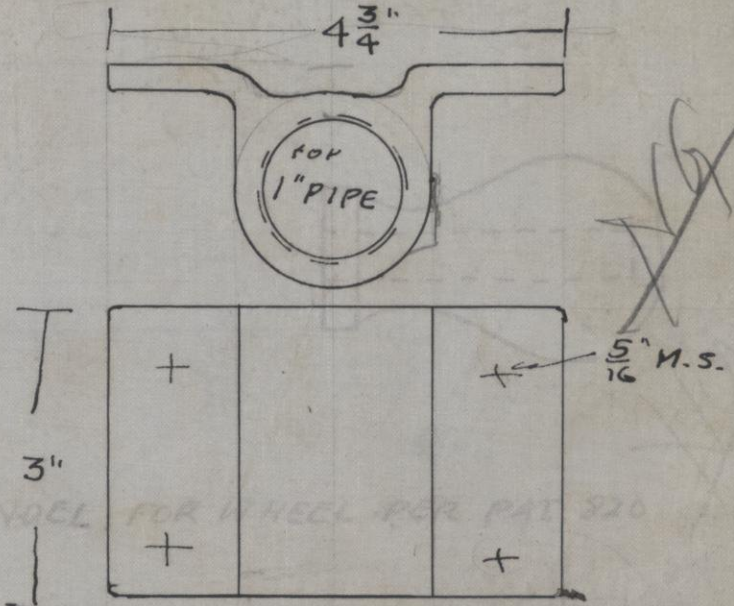

SOCKET FOR 1" PIPE 9/16 PROJECTION

PATTERN NO. 823

SEE B. P. NO. 435-C

THE HAMILTON MFG. CO.

DON'T REMOVE THIS LEAF FROM BOOK

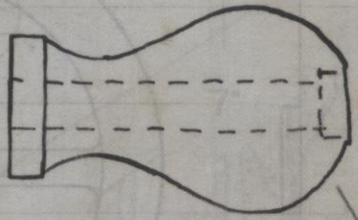

HANDEL FOR WHEEL PER PAT. 820

PATTERN NO. 821

SEE B. P. NO. 9216 A-W

THE HAMILTON MFG. CO.

DON'T REMOVE THIS LEAF FROM BOOK

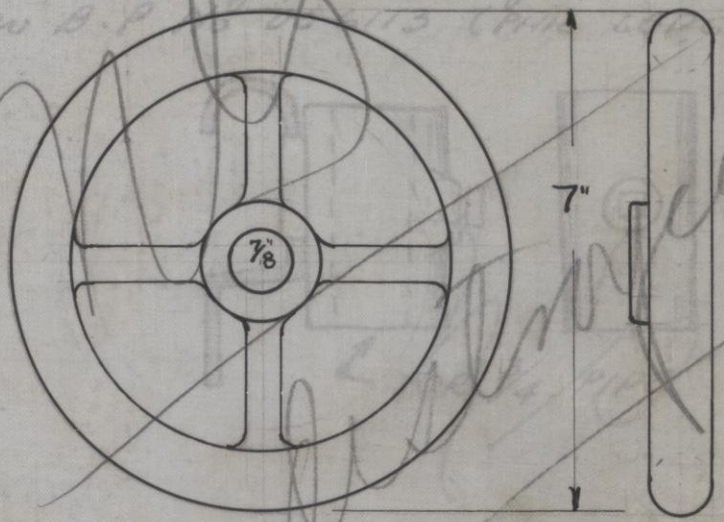

HAND-WHEEL for ADJ FITTING TABLE

PATTERN NO. 820

SEE B. P. NO. 9216-A-W

10

THE HAMILTON MFG. CO.

DON'T REMOVE THIS LEAF FROM BOOK

Spec. Casting for bolt for cabinet per B.P No 006113 (PHIL LEDGER



PATTERN NO. 819-C

SEE B. P. NO. 006113C

THE HAMILTON MFG. CO.

DON'T REMOVE THIS LEAF FROM BOOK

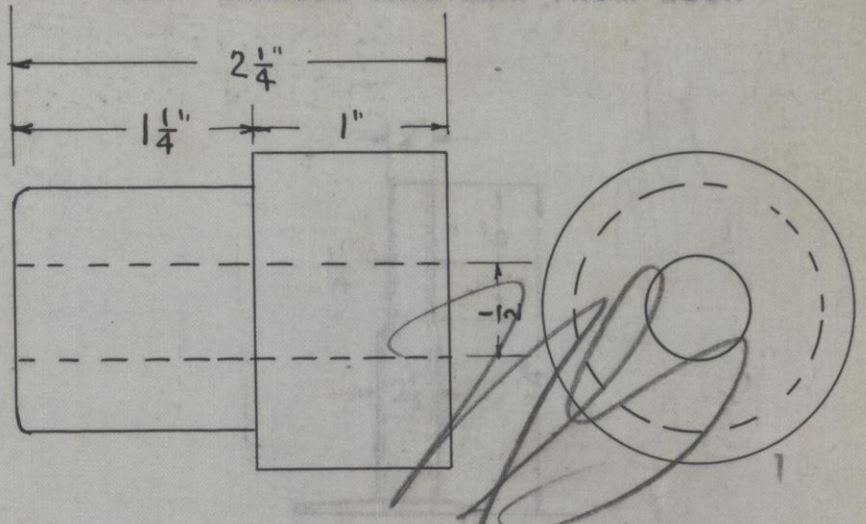

END BEARING FOR PIPE

PATTERN NO. 817

SEE B. P. NO. 006402-A

10

THE HAMILTON MFG. CO.

DON'T REMOVE THIS LEAF FROM BOOK

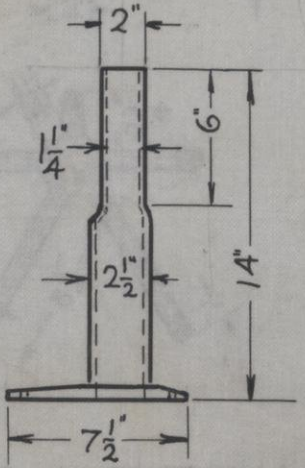

POST for ADJ. FITTING TABLE.

PATTERN NO. 816.

SEE B. P. NO. 16584-A.

THE HAMILTON MFG. CO.

DON'T REMOVE THIS LEAF FROM BOOK

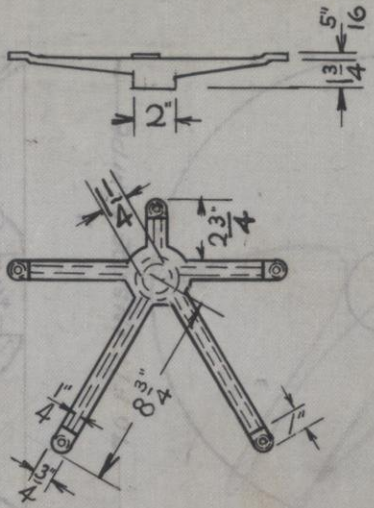

SPIDER for ADJ. FITTING TABLE.

PATTERN NO. 815

SEE B. P. NO. 16584-A.

THE HAMILTON MFG. CO.

DON'T REMOVE THIS LEAF FROM BOOK

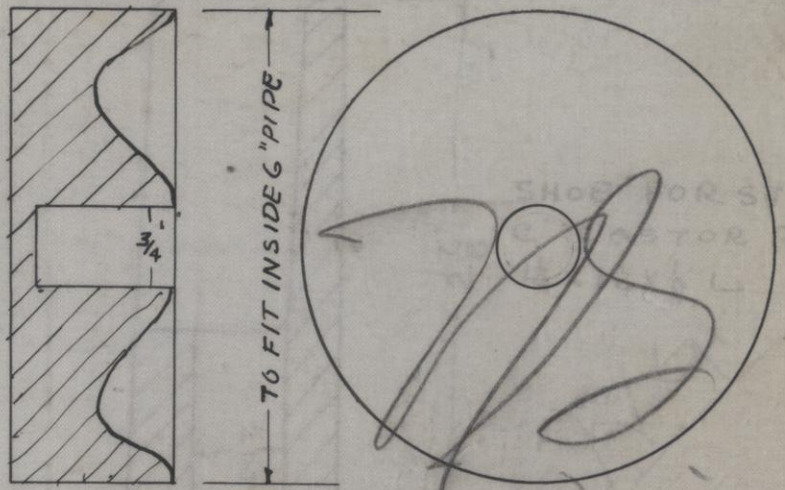

BEARING FOR SPEC. MAIL TABLES

PATTERN NO. 814

SEE B. P. NO. 006402-A

THE HAMILTON MFG. CO.

DON'T REMOVE THIS LEAF FROM BOOK

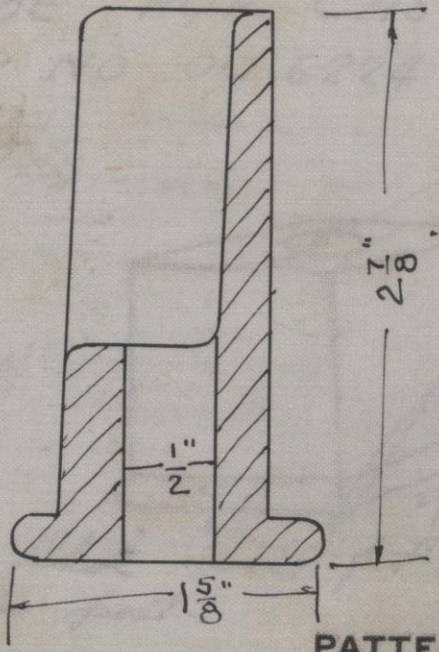

SHOE FOR STYLE "C" CASTOR FOR 1¼ x 1¼ x ⅛ L

PATTERN NO. 813

SEE B. P. NO. 434C

THE HAMILTON MFG. CO.

DON'T REMOVE THIS LEAF FROM BOOK

SHOE FOR CASTER PER
B P NO 00 6224

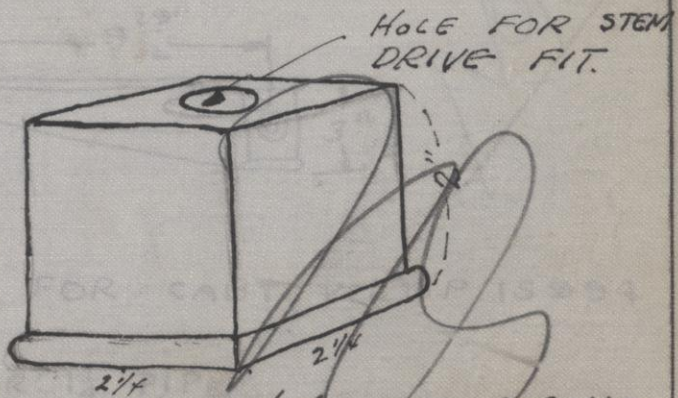

This Shoe will fit guy 2x2x11G
L iron post.

PATTERN NO. 811

SEE B. P. NO. 433C

11

THE HAMILTON MFG. CO.

DON'T REMOVE THIS LEAF FROM BOOK

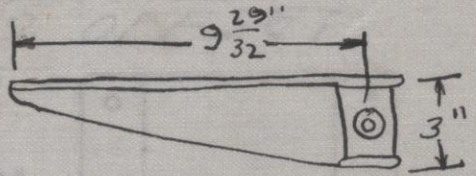

BRACKET FOR CABT. PER B.P. 15994

FOR 1¼" PIPE

PATTERN NO. 805

SEE B. P. NO. 429-C

THE HAMILTON MFG. CO.

DON'T REMOVE THIS LEAF FROM BOOK

SOCKET FOR 1¼ PIPE
FOR STEEL BRACKET
½ OFFSET

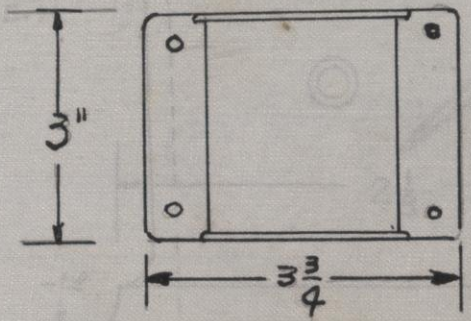

PATTERN NO. 799

SEE B. P. NO. 425C

11

THE HAMILTON MFG. CO.

DON'T REMOVE THIS LEAF FROM BOOK

BRASS SHOE
FOR DESK
FOR J.E.H.

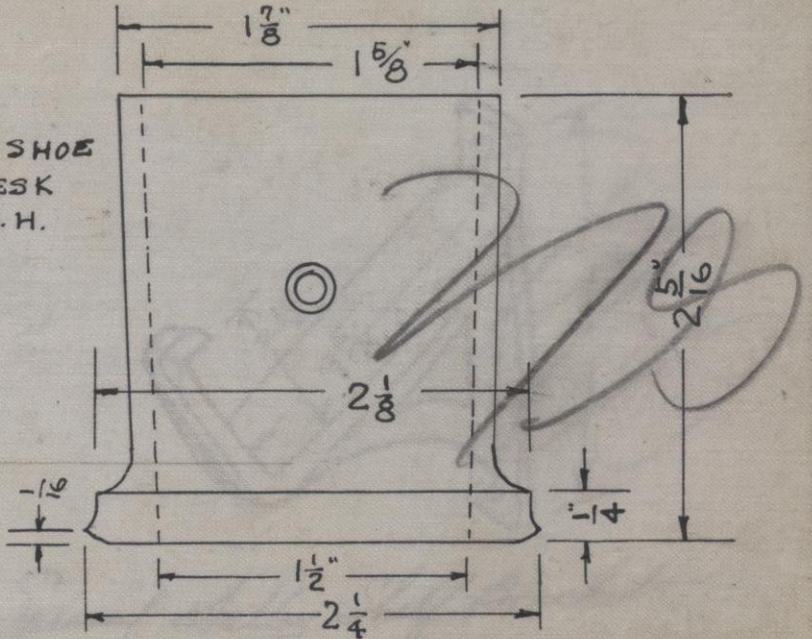

PATTERN NO. 798

SEE B. P. NO. 424-C

11

THE HAMILTON MFG. CO.

DON'T REMOVE THIS LEAF FROM BOOK

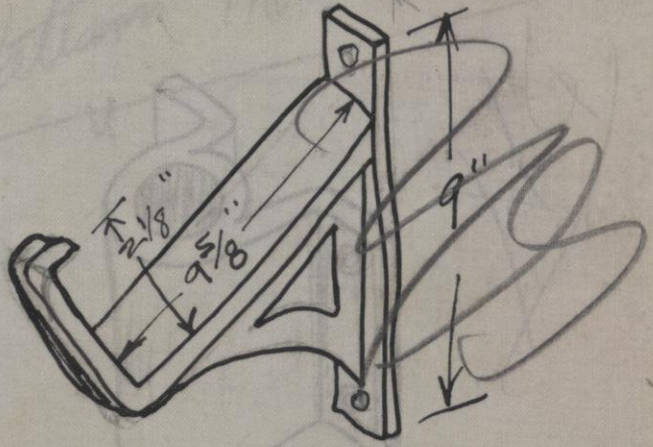

Special Valley Shelf Bracket

PATTERN NO. 795

SEE B. P. NO. 422-C

THE HAMILTON MFG. CO.

DON'T REMOVE THIS LEAF FROM BOOK

No Pattern Made

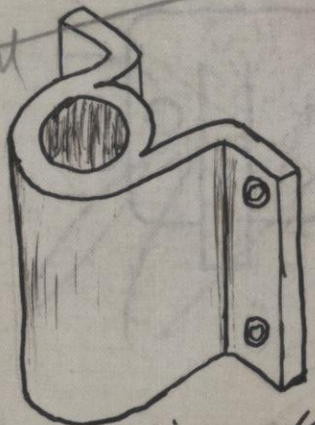

Socket for 1" pipe - 1½" Overhang

PATTERN NO. 794

SEE B. P. NO. 421-C

THE HAMILTON MFG. CO.

DON'T REMOVE THIS LEAF FROM BOOK

Catch for Keystone Dead Slug Bin

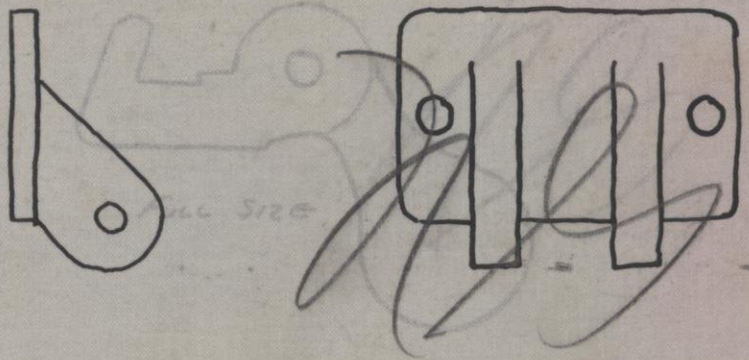

PATTERN NO. 792

SEE PAT No 791

SEE B. P. NO. 419-C

THE HAMILTON MFG. CO.

DON'T REMOVE THIS LEAF FROM BOOK

Catch for Keystone Slug Bin

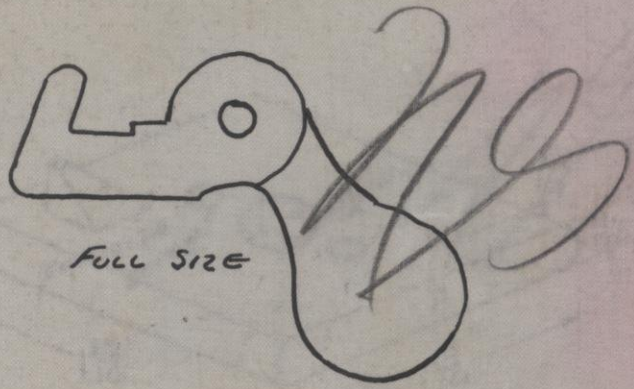

FULL SIZE

PATTERN NO. 791

SEE PAT No 792

SEE B. P. NO. 419-C

THE HAMILTON MFG. CO.

DON'T REMOVE THIS LEAF FROM BOOK

Foot Casting for Optical Cabinet

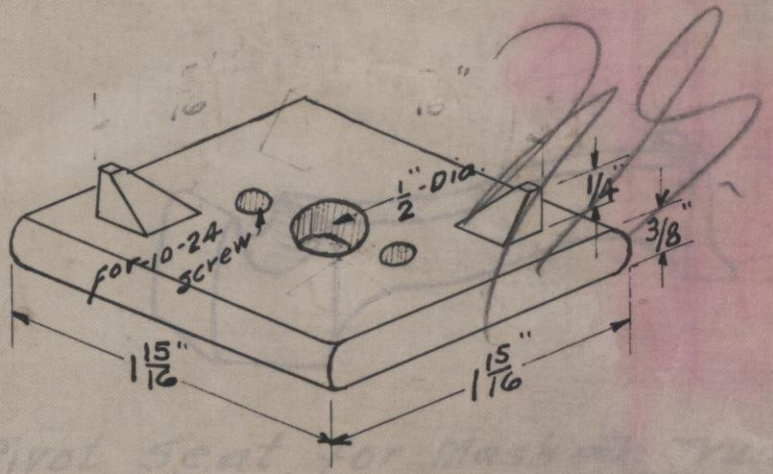

PATTERN NO. 789

SEE B. P. NO. 415-C

REV 12-23-24

THE HAMILTON MFG. CO.

DON'T REMOVE THIS LEAF FROM BOOK

NC

Saddle Mounts

#1712-L.H.

#1713-R.H.

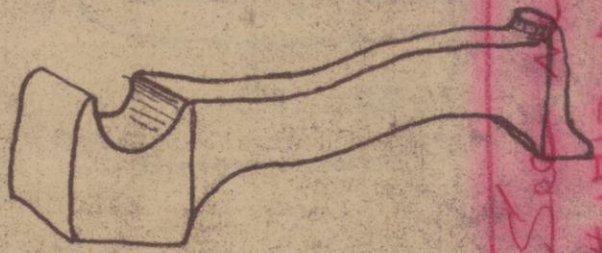

Pivot Seat for Mashek Truck

PATTERN NO. 782 L.H. R.H.

SEE B. P. NO. 408-C

THE HAMILTON MFG. CO.

DON'T REMOVE THIS LEAF FROM BOOK

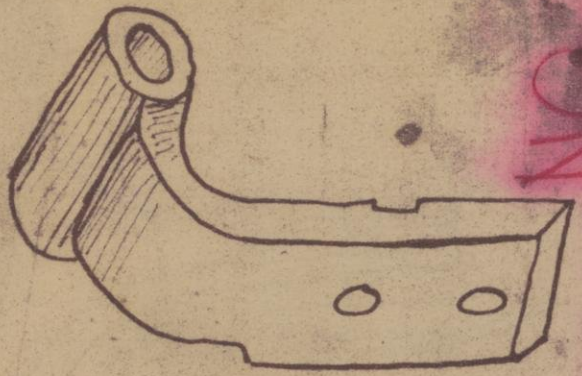

NO.

See next numbers.

1710-L.H. & # 1711-R.H.

Support for Mashek Truck

PATTERN NO. 781 L.H. R.H.

SEE B. P. NO. 407-C

THE HAMILTON MFG. CO.

DON'T REMOVE THIS LEAF FROM BOOK

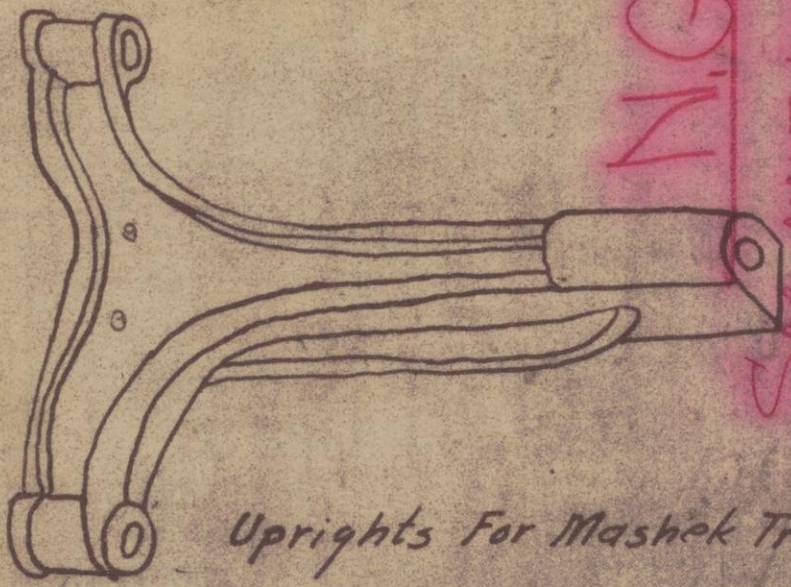

N.G.

See new numbers #1708-LH & #1709-R.H.

Uprights For Mashek Truck

PATTERN NO. 776-LH R.H.

SEE B. P. NO. 403-C

THE HAMILTON MFG. CO.

DON'T REMOVE THIS LEAF FROM BOOK

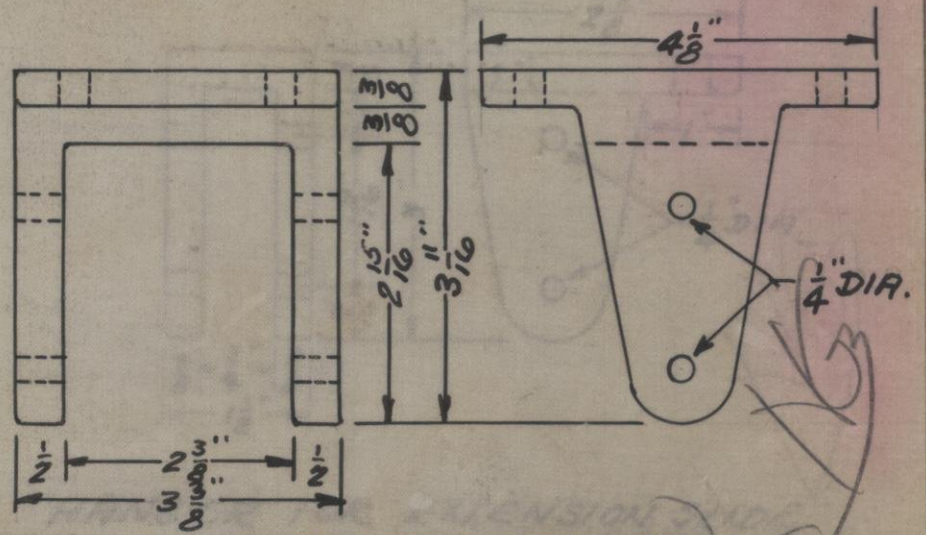

HANGER FOR EXTENSION SLIDE
ON VERTICAL FILE PLAN SAFE 005241 & 005242

PATTERN NO. 761

SEE B. P. NO. 005241-B

THE HAMILTON MFG. CO.

DON'T REMOVE THIS LEAF FROM BOOK

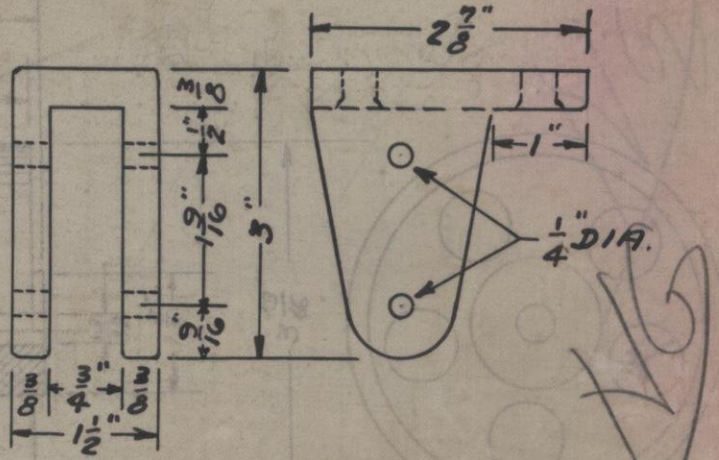

HANGER FOR EXTENSION SLIDE
ON VERTICAL FILE PLAN SAFES 005241 & 005242

PATTERN NO. 760

SEE B. P. NO. 005241-B

THE HAMILTON MFG. CO.

DON'T REMOVE THIS LEAF FROM BOOK

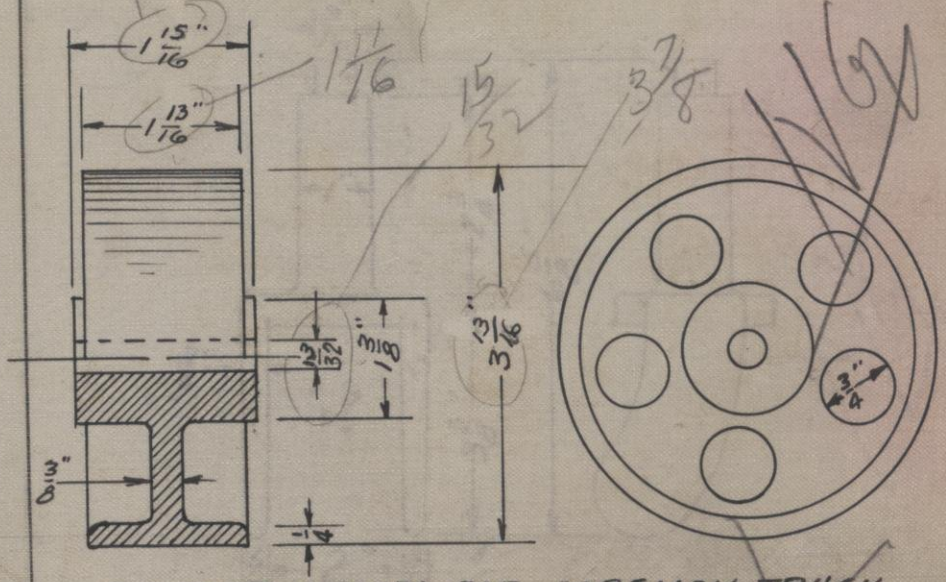

CASTER WHEEL FOR MASHEK TRUCK
PER B.P. Nº 004681

PATTERN NO. 759

SEE B. P. NO. 389

THE HAMILTON MFG. CO.

DON'T REMOVE THIS LEAF FROM BOOK

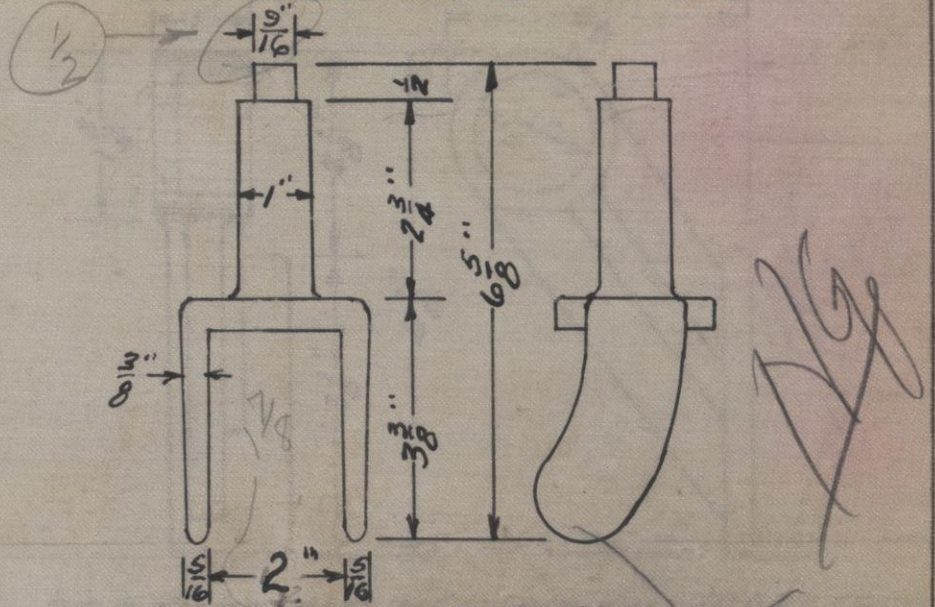

FORK FOR MASHEK TRUCK
PER B.P. No 004681

PATTERN NO. 758

SEE B. P. NO. 389

THE HAMILTON MFG. CO.

DON'T REMOVE THIS LEAF FROM BOOK

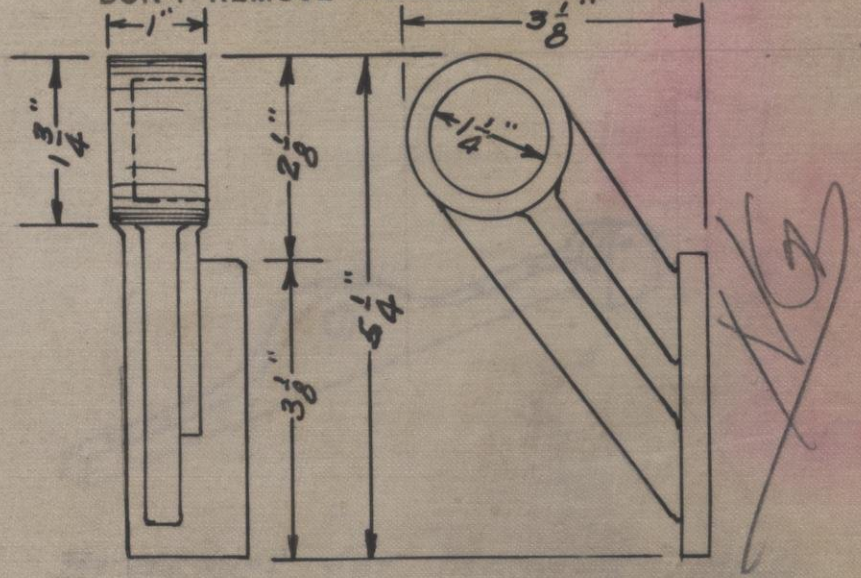

BRACKET FOR HANDLE ON No. 849 TRUCK

PATTERN NO. 755 R&L

SEE B. P. NO. 386-C

THE HAMILTON MFG. CO.

DON'T REMOVE THIS LEAF FROM BOOK

NC

See new numbers

#1714-L.H.

#1715-R.H.

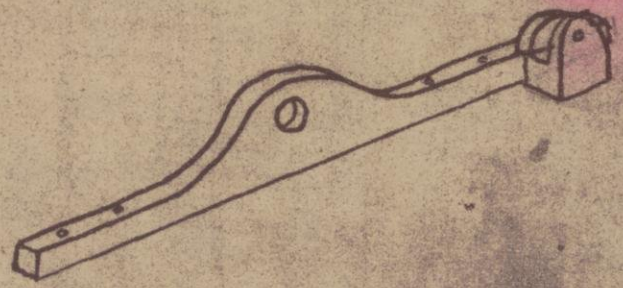

Bracket for Mashek Truck

PATTERN NO. 748-L.H. R.H.

SEE B. P. NO. 410-C

THE HAMILTON MFG. CO.

DON'T REMOVE THIS LEAF FROM BOOK

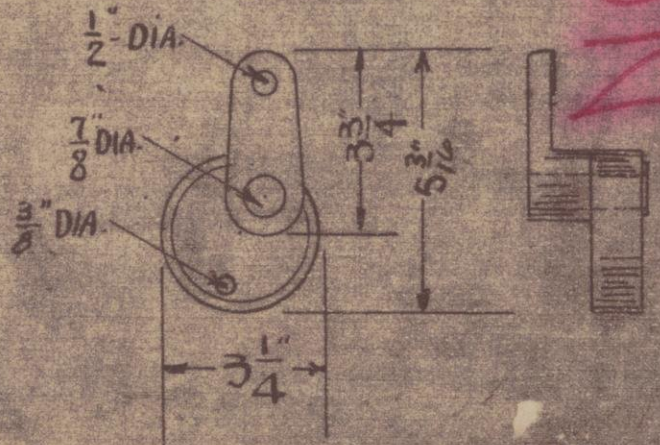

ECCENTRIC FOR SMOUSE TRUCK

PATTERN NO. 749 L&R

SEE B. R. NO. 380-C

N.G.

See new numbers #1706-L.H. & #1707-R.H.

THE HAMILTON MFG. CO.

DON'T REMOVE THIS LEAF FROM BOOK

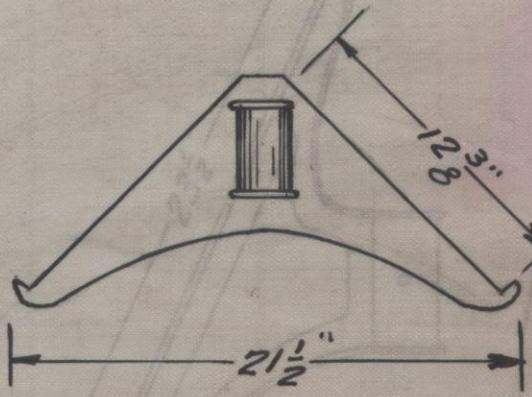

NG

BRACKET for OVERHEAD BANK
1¼" PIPE

PATTERN NO. 746

SEE B. P. NO. 377-C

N

THE HAMILTON MFG. CO.

DON'T REMOVE THIS LEAF FROM BOOK

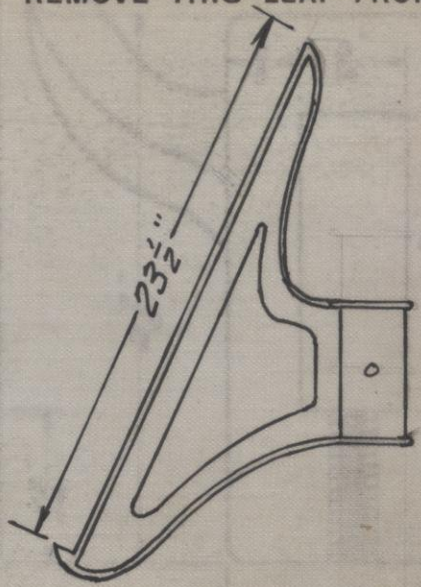

BRACKET FOR CASE 25⅛" WIDE FOR 1¼" PIPE

PATTERN NO. 745

SEE B. P. NO. 376-C

12

THE HAMILTON MFG. CO.

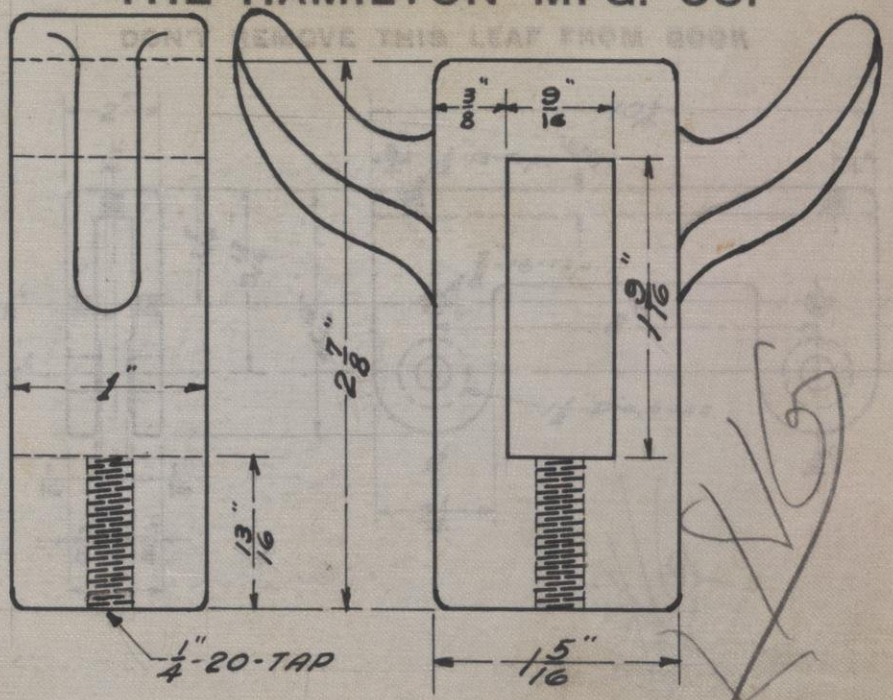

PATTERN NO. 744

SEE B. P. NO. 005243.

12

THE HAMILTON MFG. CO.

DON'T REMOVE THIS LEAF FROM BOOK

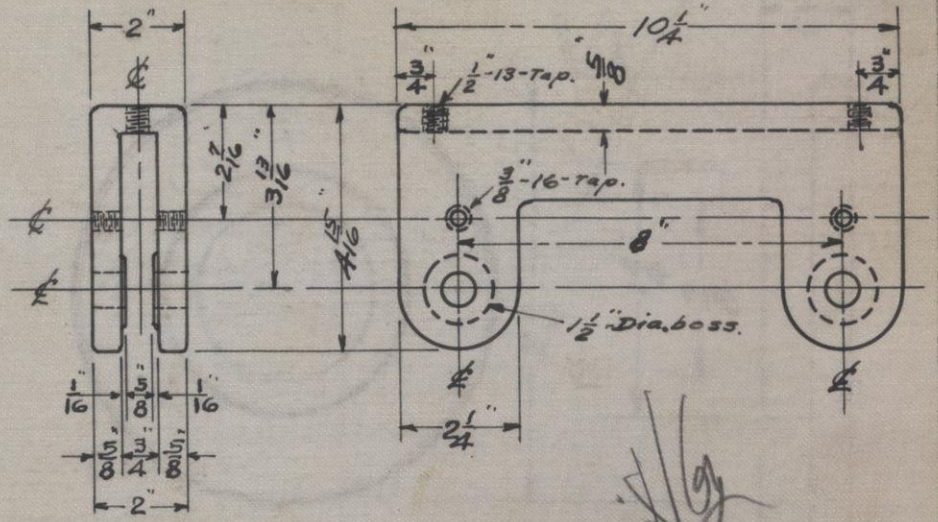

PATTERN NO. 743

SEE B. P. NO. 005243.

THE HAMILTON MFG. CO.

DON'T REMOVE THIS LEAF FROM BOOK

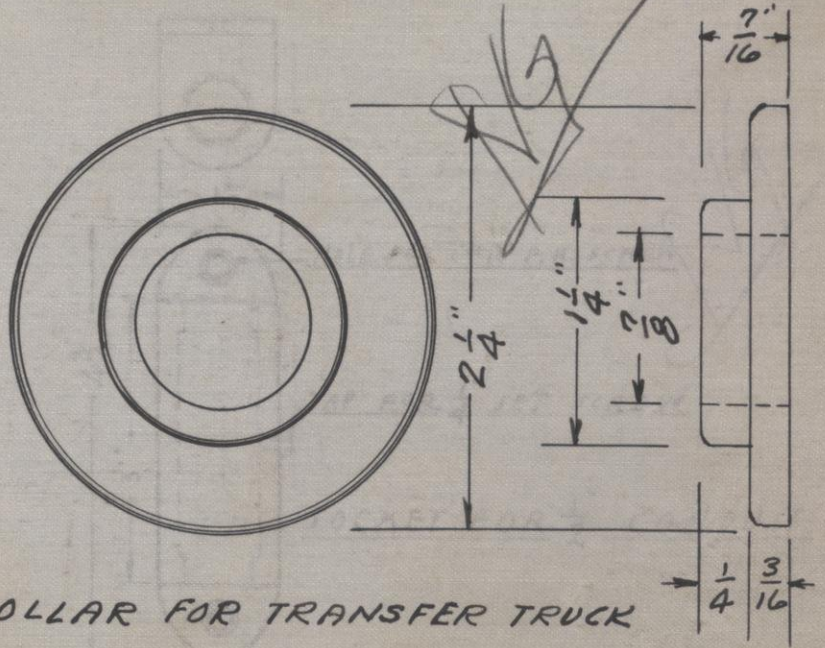

COLLAR FOR TRANSFER TRUCK

PATTERN NO. 742

SEE B. P. NO. 5601-B

THE HAMILTON MFG. CO.

DON'T REMOVE THIS LEAF FROM BOOK

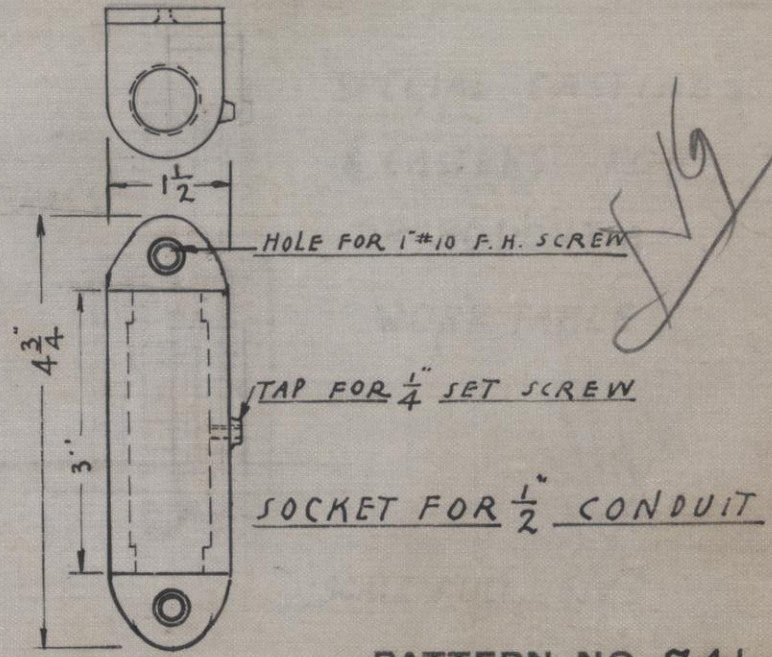

PATTERN NO. 741

SEE B. P. NO. 375

THE HAMILTON MFG. CO.

DON'T REMOVE THIS LEAF FROM BOOK

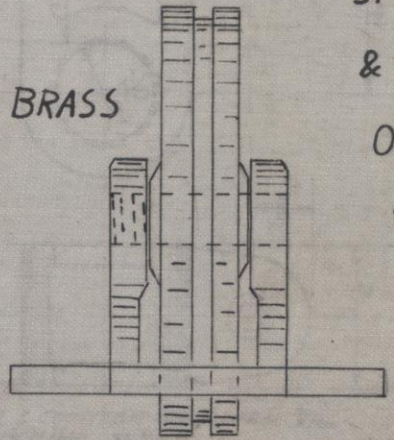

BRASS

SPECIAL CASTINGS & CASTERS FOR ORTHODONTIA WORK TABLE

SCALE FULL SIZE

PATTERN NO. 740

SEE B. P. NO. 1163-B

C.G.H. 2-17-21

THE HAMILTON MFG. CO.

DON'T REMOVE THIS LEAF FROM BOOK

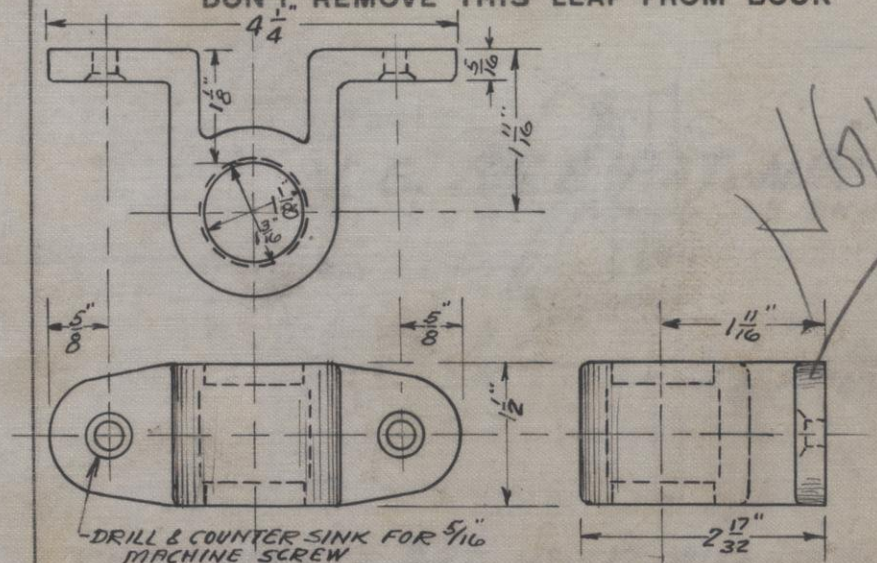

SPECIAL SOCKET FOR 3/4" PIPE
FOR 1 1/8" PROJECTION

PATTERN NO. 737

SEE B. P. NO. 372-C

11

THE HAMILTON MFG. CO.

DON'T REMOVE THIS LEAF FROM BOOK

No Pattern See Pattern E 53

N. G. SEE PAT. NO. 1099.

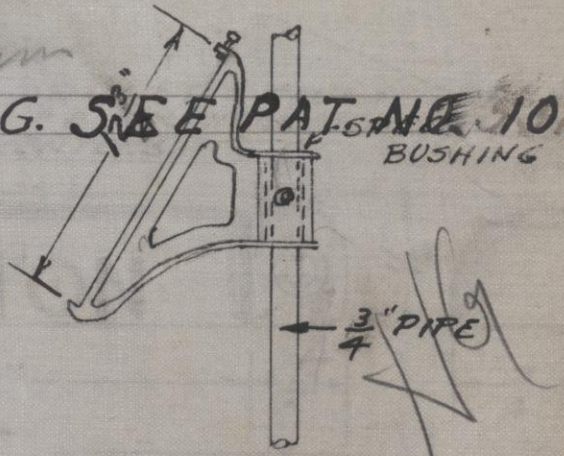

REG. BRACKET PAT. Nº 377 WITH SPECIAL BUSHING TO FIT ¾" PIPE

PATTERN NO. 736

SEE B. P. NO. 371-C

ADDED SET SCREW 8/20/25
REV. BRACKET

THE HAMILTON MFG. CO.

DON'T REMOVE THIS LEAF FROM BOOK

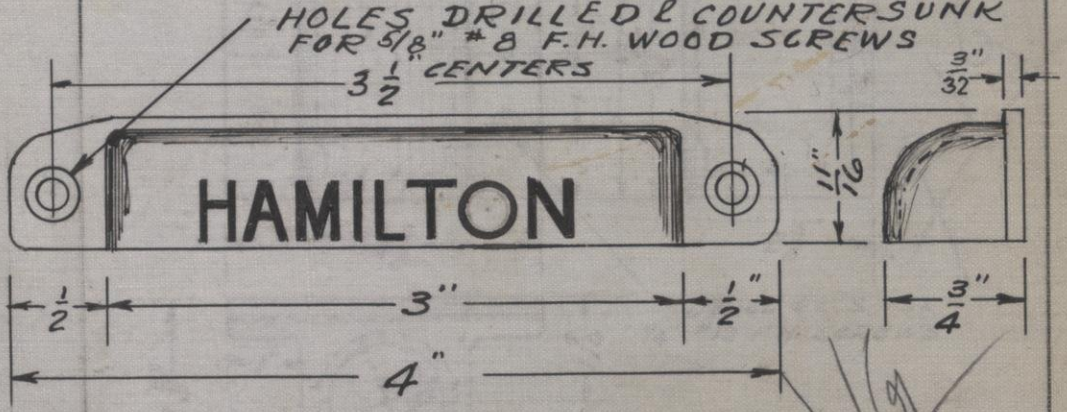

CAST IRON PULL
JAPAN FINISH

PATTERN NO. 735

SEE B. P. NO. 370-C

THE HAMILTON MFG. CO.

DON'T REMOVE THIS LEAF FROM BOOK

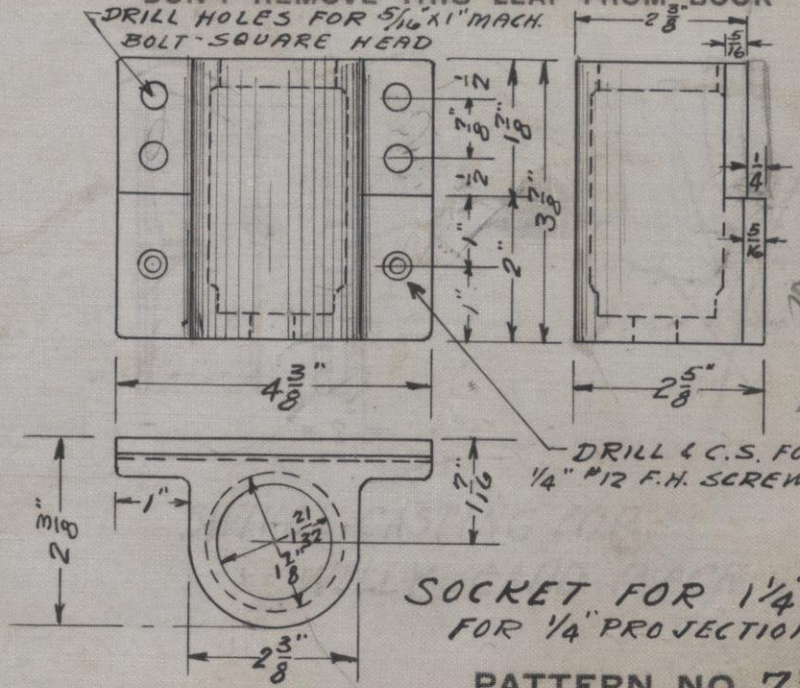

SOCKET FOR 1¼" PIPE
FOR ¼" PROJECTION

PATTERN NO. 734

SEE B. P. NO. 369-C

THE HAMILTON MFG. CO.

DON'T REMOVE THIS LEAF FROM BOOK

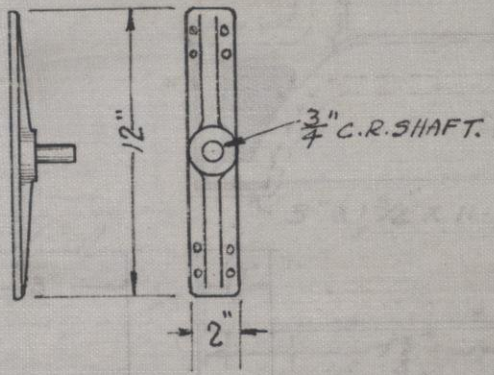

SWIVEL CASTING FOR
WILLY CARD RACK

SEE B. P. NO. 365-C PATTERN NO. 730

THE HAMILTON MFG. CO.

DON'T REMOVE THIS LEAF FROM BOOK

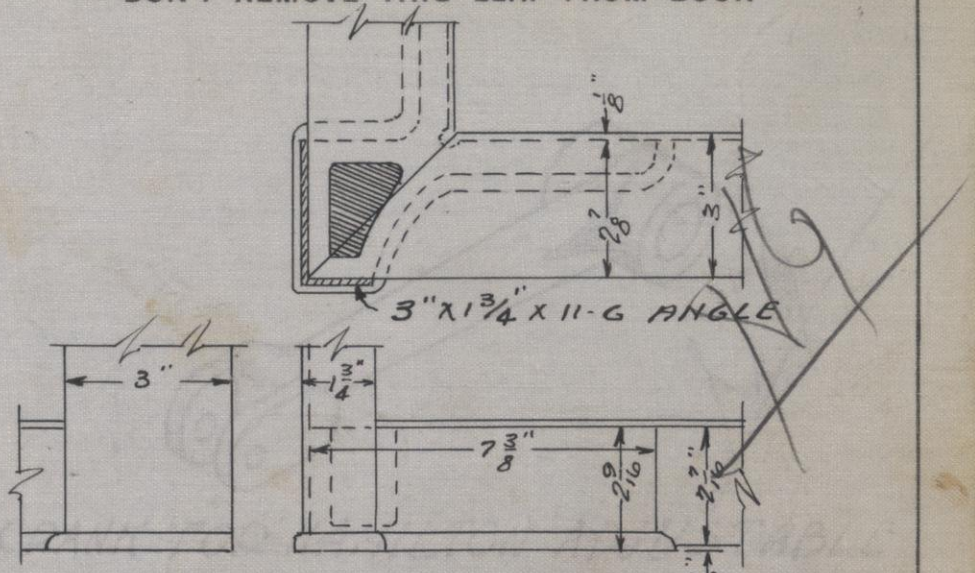

FILLET FOR 3" X 1 3/4" X 11-G L
1 - RIGHT & 1 LEFT

PATTERN NO. 729-L
729-R

SEE B. P. NO. 364-C

479

THE HAMILTON MFG. CO.

DON'T REMOVE THIS LEAF FROM BOOK

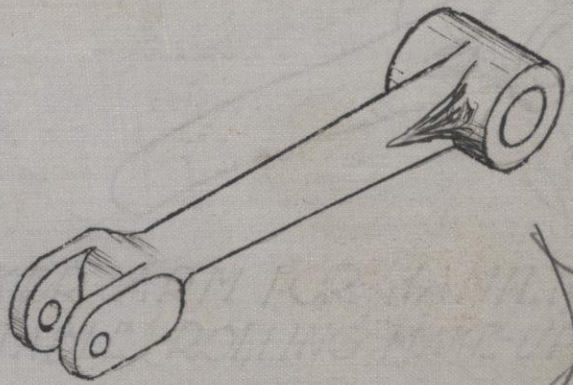

CRANK FOR HAMILTON ADJUSTABLE ROLLING MAKE-UP TABLE

SEE B. P. NO. 362-C PATTERN NO. 728

THE HAMILTON MFG. CO.

DON'T REMOVE THIS LEAF FROM BOOK



ROCKER ARM FOR HAMILTON ADJUSTABLE ROLLING MAKE-UP TABLE

SEE B. P. NO. 361-C

PATTERN NO. 727

THE HAMILTON MFG. CO.

DON'T REMOVE THIS LEAF FROM BOOK

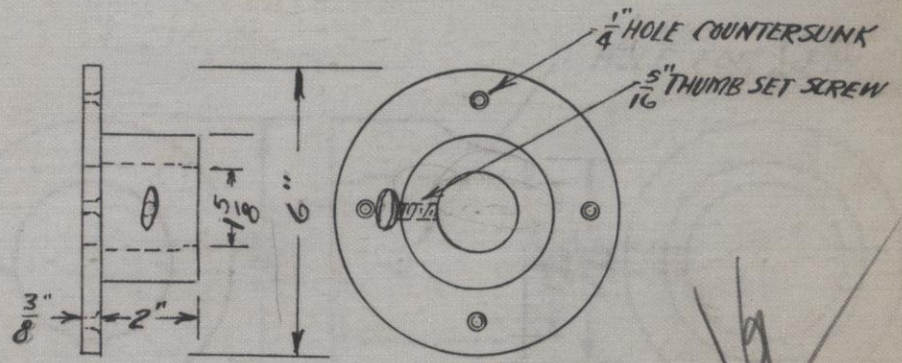

FLANGE FOR 1¼" PIPE

PATTERN NO. 126

SEE B. P. NO. 360

THE HAMILTON MFG. CO.

DON'T REMOVE THIS LEAF FROM BOOK

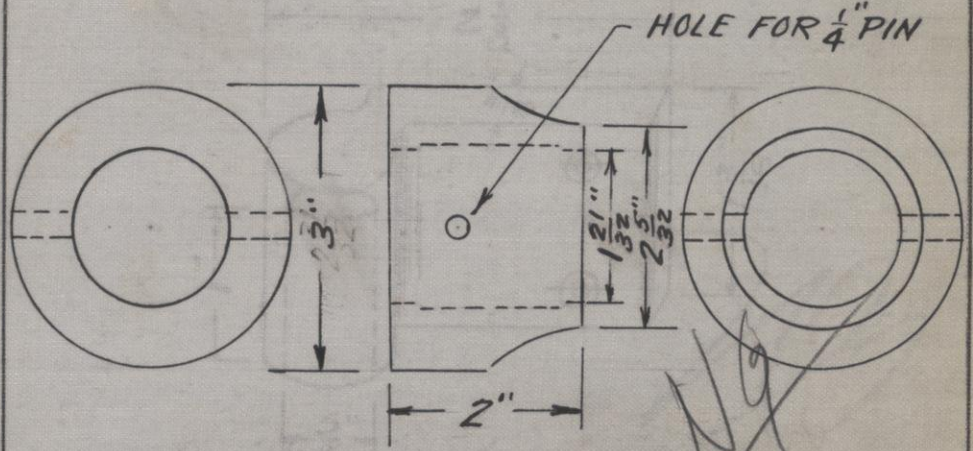

FLANGE FOR 1 1/4" PIPE

PATTERN NO. 725

SEE B. P. NO. 359-C

THE HAMILTON MFG. CO.

DON'T REMOVE THIS LEAF FROM BOOK

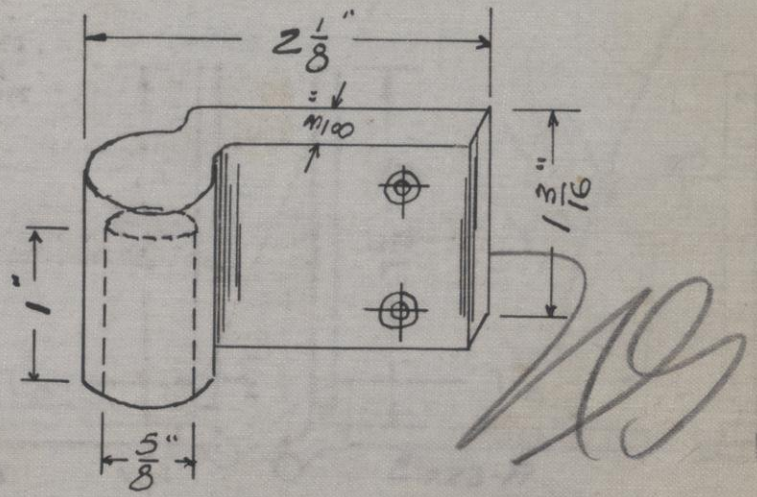

SPEC. SOCKET FOR DENTAL CABT. PER B.P.#12574

PATTERN NO. 724

SEE B. P. NO. 352-C

THE HAMILTON MFG. CO.

DON'T REMOVE THIS LEAF FROM BOOK

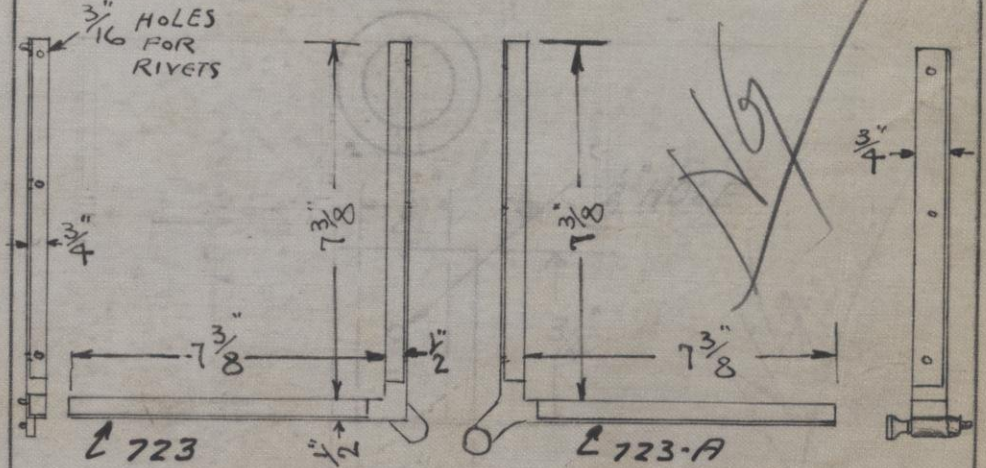

PARTS FOR PARAGON TABLET PRESS

PATTERN NO. 723
723-A

SEE B. P. NO. 358-C

THE HAMILTON MFG. CO.

DON'T REMOVE THIS LEAF FROM BOOK

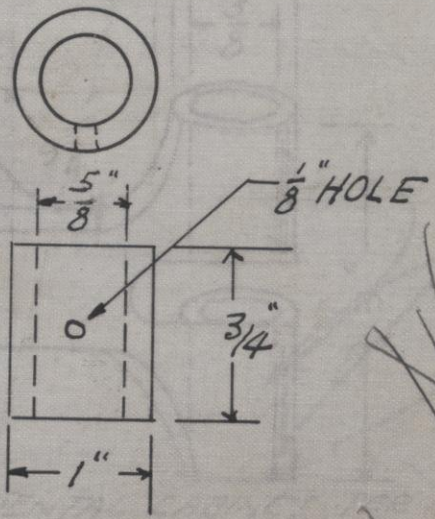

COLLAR FOR DENTAL CABT. PER B.R.# 12574

PATTERN NO. 722

SEE B. P. NO. 357-C.

THE HAMILTON MFG. CO.

DON'T REMOVE THIS LEAF FROM BOOK

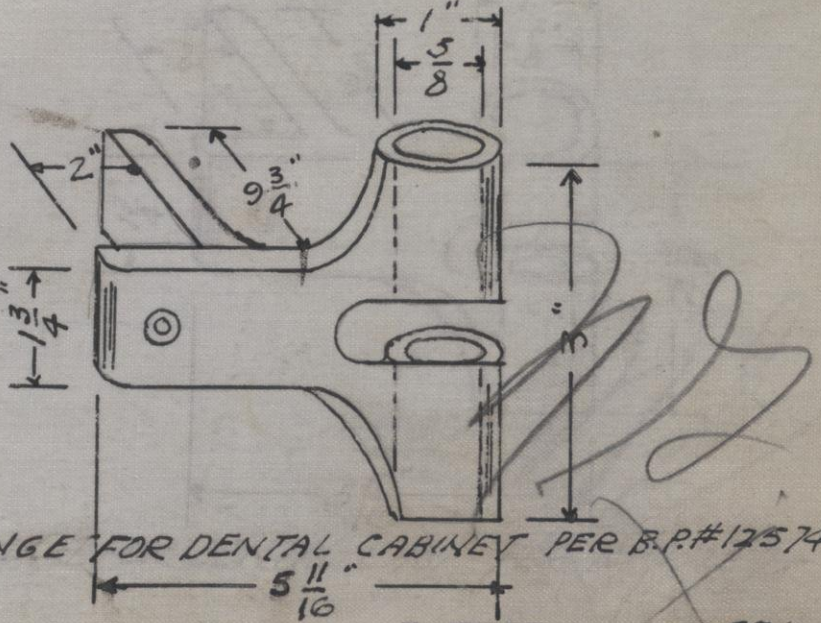

HINGE FOR DENTAL CABINET PER B.P.#12574

PATTERN NO. 721

SEE B. P. NO. 355-C.

THE HAMILTON MFG. CO.

DON'T REMOVE THIS LEAF FROM BOOK

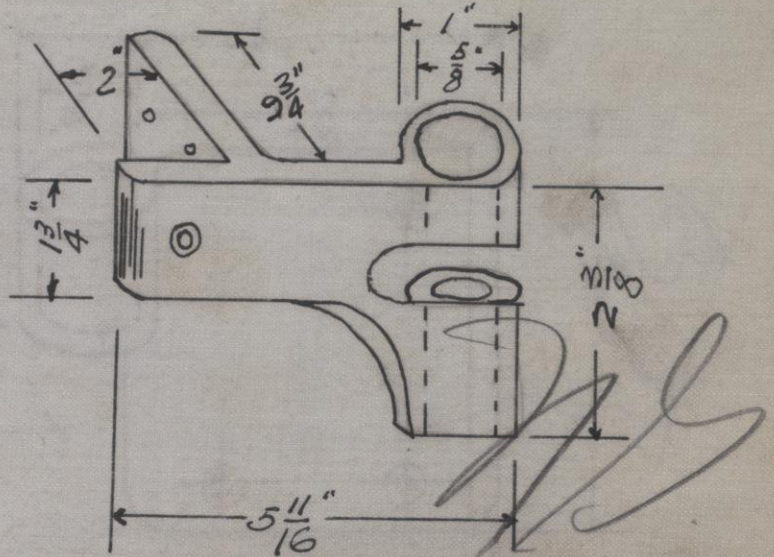

HINGE FOR DENTAL CABT. PER B.P.# 12574

PATTERN NO. 719

SEE B. P. NO. 354-C.

476

THE HAMILTON MFG. CO.

DON'T REMOVE THIS LEAF FROM BOOK

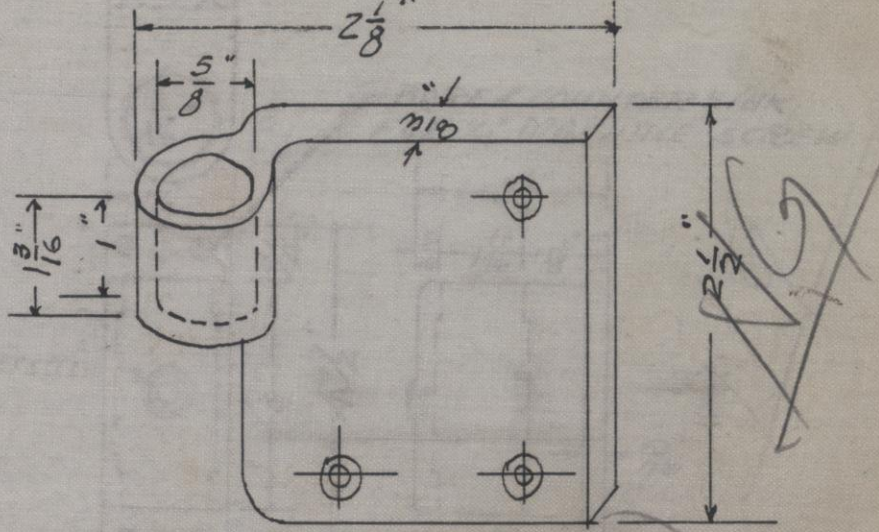

SPEC. SOCKET FOR DENTAL CABT. PER B.P.#12574

PATTERN NO. 718

SEE B. P. NO. 353-C

THE HAMILTON MFG. CO.

DON'T REMOVE THIS LEAF FROM BOOK

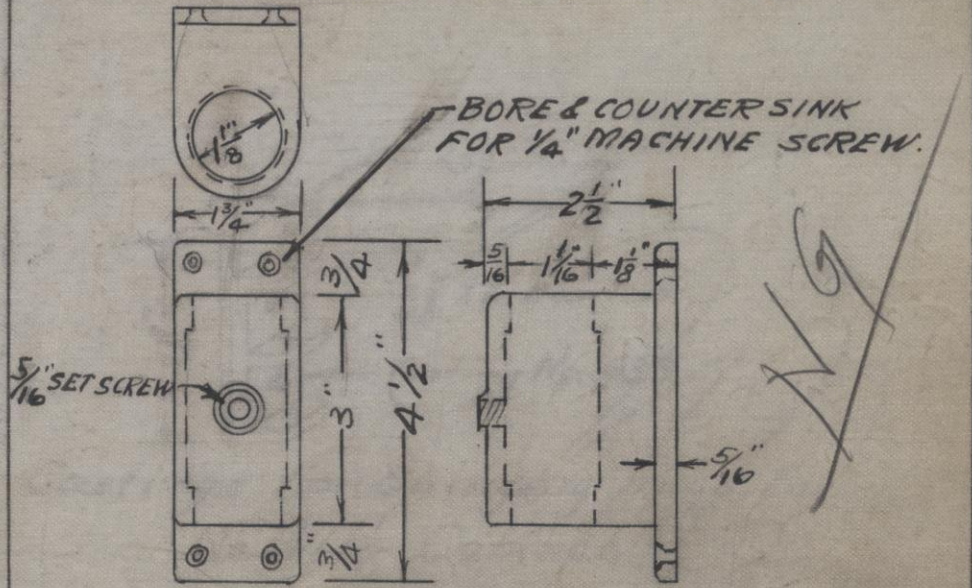

SOCKET FOR 3/4" PIPE - 1 1/8" OVERHANG

PATTERN NO. 717

SEE B. P. NO. 351-C

THE HAMILTON MFG. CO.

DON'T REMOVE THIS LEAF FROM BOOK

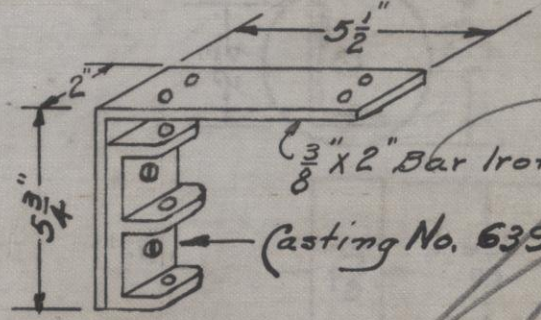

Castings For Swinging Trays For No. 471 1/2 Cabinet.

N. G. See Pat # 639

PATTERN NO. 716.

SEE B. P. NO. 350-C & 350-"C"-"A"

THE HAMILTON MFG. CO.

DON'T REMOVE THIS LEAF FROM BOOK

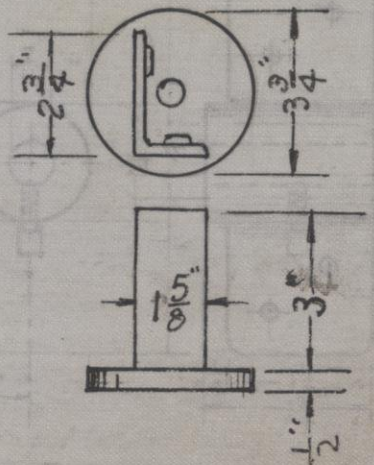

NG

CASTER FLANGE FOR 3"x2"x1/8" ∠

SEE B. P. NO. 349-C PATTERN NO. 715

466

THE HAMILTON MFG. CO.

DON'T REMOVE THIS LEAF FROM BOOK

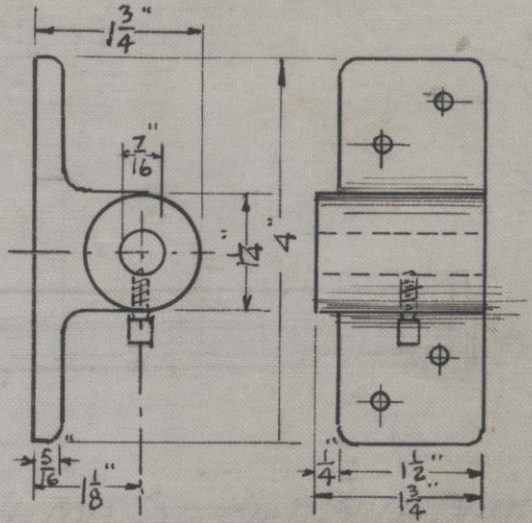

AXLE BOX FOR BOSWORTH AUXILIARY CAB'T.

SEE B. P. NO. 348-C PATTERN NO. 714

THE HAMILTON MFG. CO.

DON'T REMOVE THIS LEAF FROM BOOK

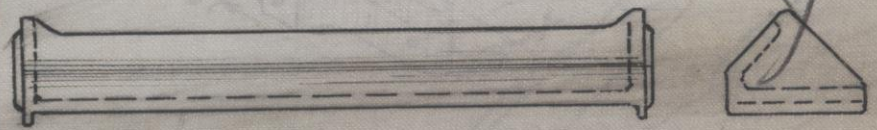

RAIL FOR SPECIAL SELF-DUMPING TRUCK

SEE B. P. NO. 347-C PATTERN NO. 713

THE HAMILTON MFG. CO.

DON'T REMOVE THIS LEAF FROM BOOK

Toe Space – $2\frac{11}{16}$" high Overall.

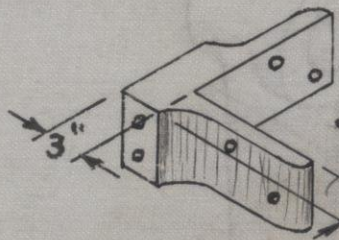

3"x3"–Toe Space

Toe Space Corner Casting For Special Cabinets per Blue Print Number 003768.

PATTERN NO. 712

SEE B. P. NO. 346-C

THE HAMILTON MFG. CO.

DON'T REMOVE THIS LEAF FROM BOOK



See Pat

CRANK FOR
HAMILTON ADJUSTABLE
ROLLING MAKE-UP
TABLE

SEE B. P. NO. 345-C

PATTERN NO. 711

THE HAMILTON MFG. CO.

DON'T REMOVE THIS LEAF FROM BOOK

See Pat No 727

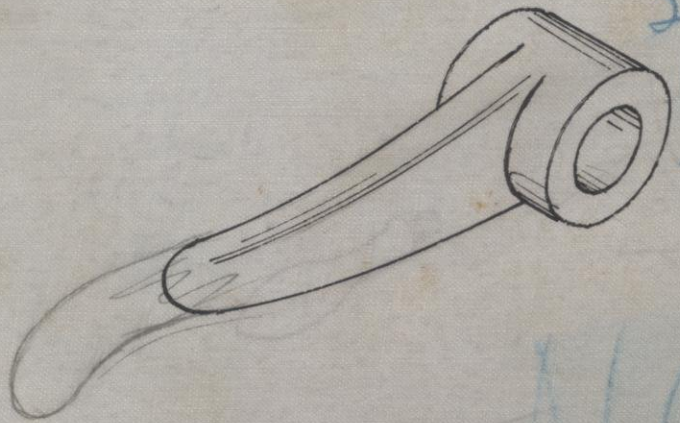

ROCKER ARM FOR
HAMILTON ADJUSTABLE ROLLING
MAKE-UP TABLE

SEE B. P. NO. 344-C

PATTERN NO. 710

THE HAMILTON MFG. CO.

DON'T REMOVE THIS LEAF FROM BOOK

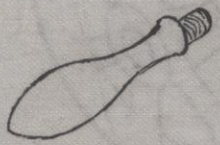

HANDLE FOR HANDWHEEL ON HAMILTON ROLLING MAKE-UP TABLE

SEE B. P. NO. 343-C PATTERN NO. 709-A

THE HAMILTON MFG. CO.

DON'T REMOVE THIS LEAF FROM BOOK

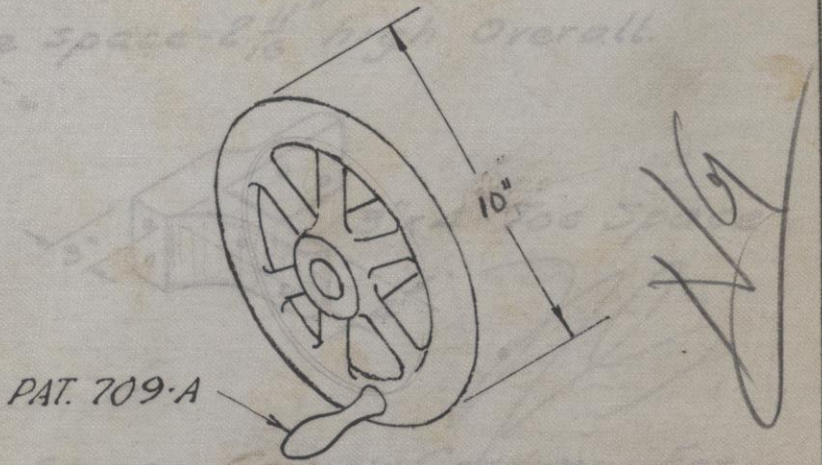

HANDWHEEL - FOR HAMILTON ADJUSTABLE ROLLING MAKE-UP TABLE

SEE B. P. NO. 343-C PATTERN NO. 709

THE HAMILTON MFG. CO.

DON'T REMOVE THIS LEAF FROM BOOK

Toe space-$2\frac{11}{16}$" high Overall.

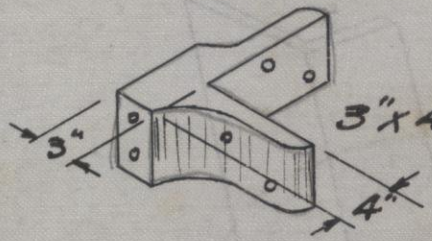

3"x4" Toe Space

Toe Space Corner Casting For Special Cabinets per Blue Print Number 003768.

PATTERN NO. 707

SEE B. P. NO. 342-C.

THE HAMILTON MFG. CO.

DON'T REMOVE THIS LEAF FROM BOOK

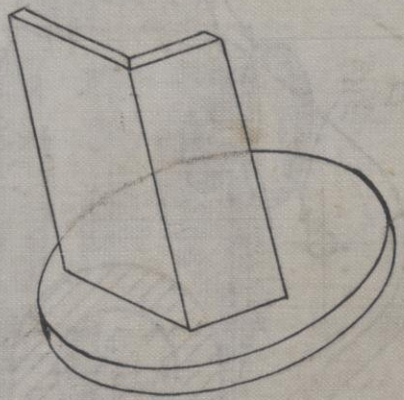

SPECIAL CASTOR FLANGE FOR $1\frac{1}{2}$" X $3\frac{1}{4}$" X 11-9
STEEL ANGLE FOR #789 TABLE

PATTERN NO. 706R&L

SEE B. P. NO. 341-C

THE HAMILTON MFG. CO.

DON'T REMOVE THIS LEAF FROM BOOK

SOCKET FOR No 37-D DR. TABLE

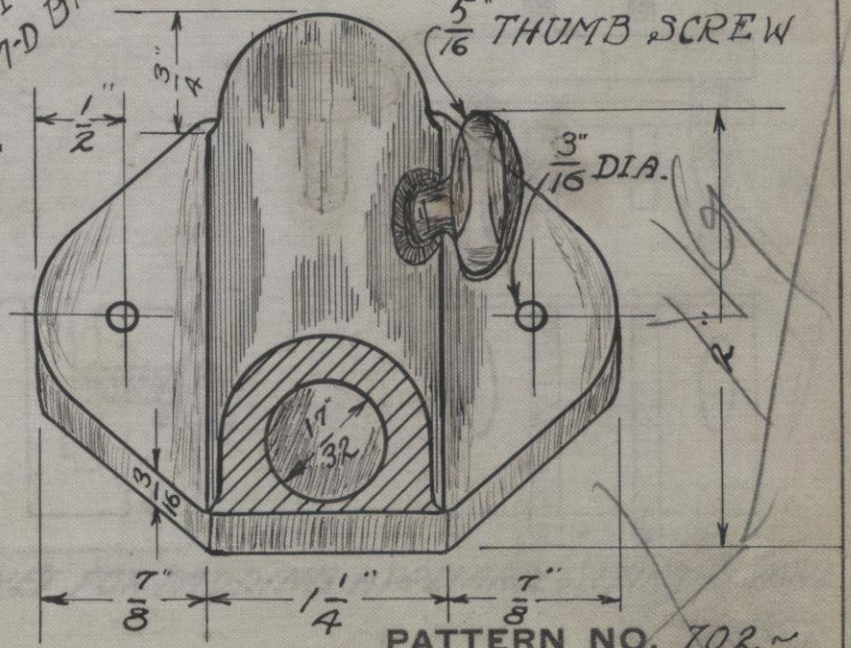

PATTERN NO. 702~

SEE B. P. NO. 338-C-

THE HAMILTON MFG. CO.

DON'T REMOVE THIS LEAF FROM BOOK

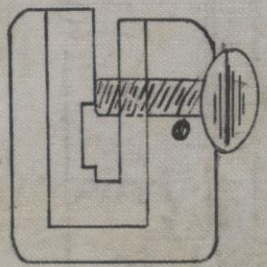

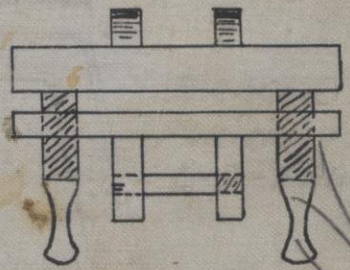

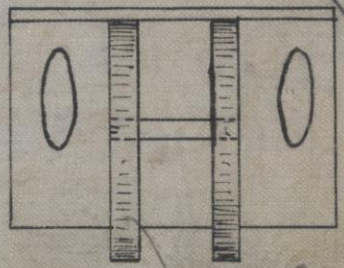

BRACKET FOR PADDING APPLIANCE ON BINDERY TABLE

PATTERN NO. 701

SEE B. P. NO 1986

THE HAMILTON MFG. CO.

DON'T REMOVE THIS LEAF FROM BOOK

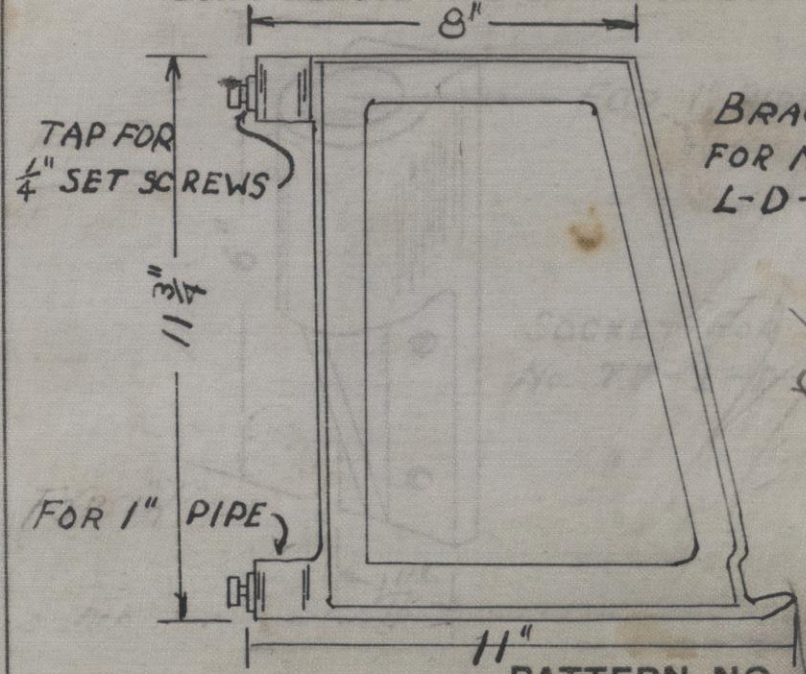

BRACKET
FOR No. 77
L-D-FRAME

PATTERN NO. 699

SEE B. P. NO. NO DRAWING.

THE HAMILTON MFG. CO.

DON'T REMOVE THIS LEAF FROM BOOK

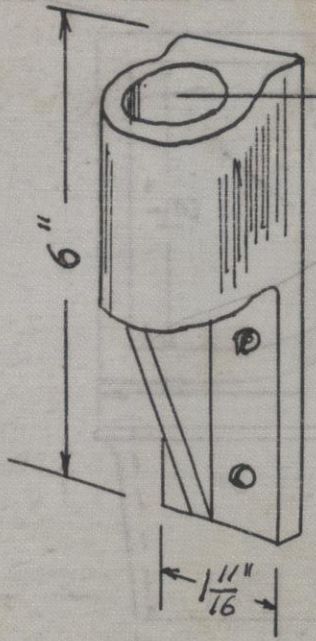

FOR 1" PIPE.

YG

SOCKET FOR
No. 77-L-D-FRAME.

PATTERN NO. 698

SEE B. P. NO. 337-C

431

THE HAMILTON MFG. CO.

DON'T REMOVE THIS LEAF FROM BOOK

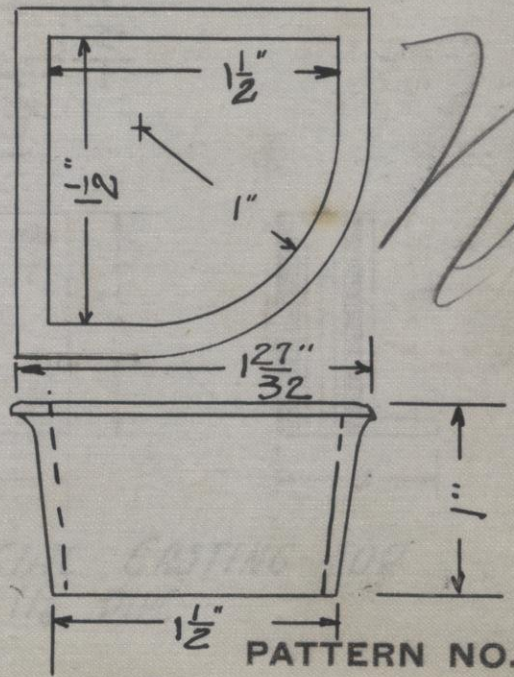

PATTERN NO. C97

SEE B. P. NO. 335-C.

450

THE HAMILTON MFG. CO.

DON'T REMOVE THIS LEAF FROM BOOK

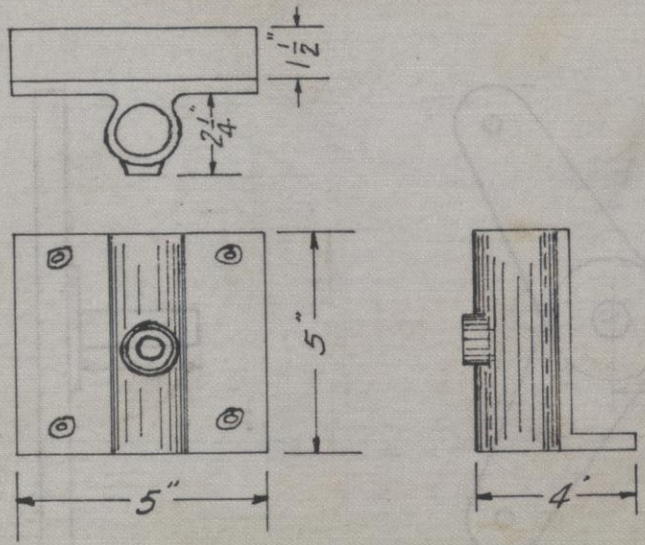

SPECIAL CASTING FOR
1 1/4" PIPE

PATTERN NO. 696

SEE B. P. NO. 334-C

THE HAMILTON MFG. CO.

DON'T REMOVE THIS LEAF FROM BOOK

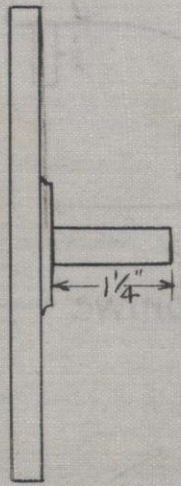

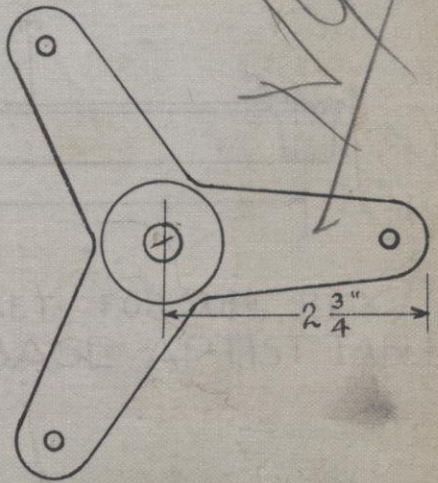

SPIDER FOR TOOL BOX.

IRON BASE ARTIST TABLE.

PATTERN NO. 693.

SEE B. P. NO. 12500-W.

THE HAMILTON MFG. CO.

DON'T REMOVE THIS LEAF FROM BOOK

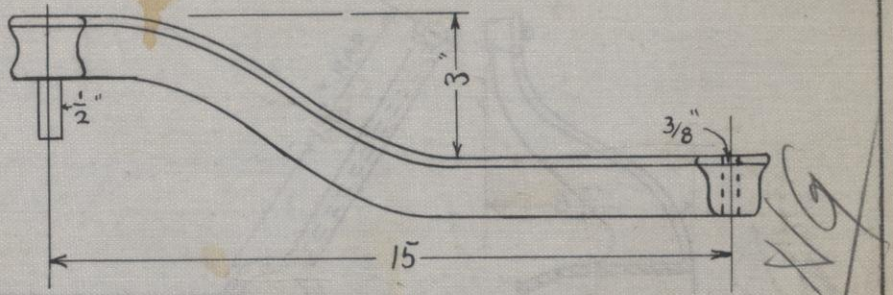

SWINGING BRACKET FOR TOOL BOX.
IRON BASE ARTIST TABLE

PATTERN NO. 692.

SEE B. P. NO. 12500-W

THE HAMILTON MFG. CO.

DON'T REMOVE THIS LEAF FROM BOOK

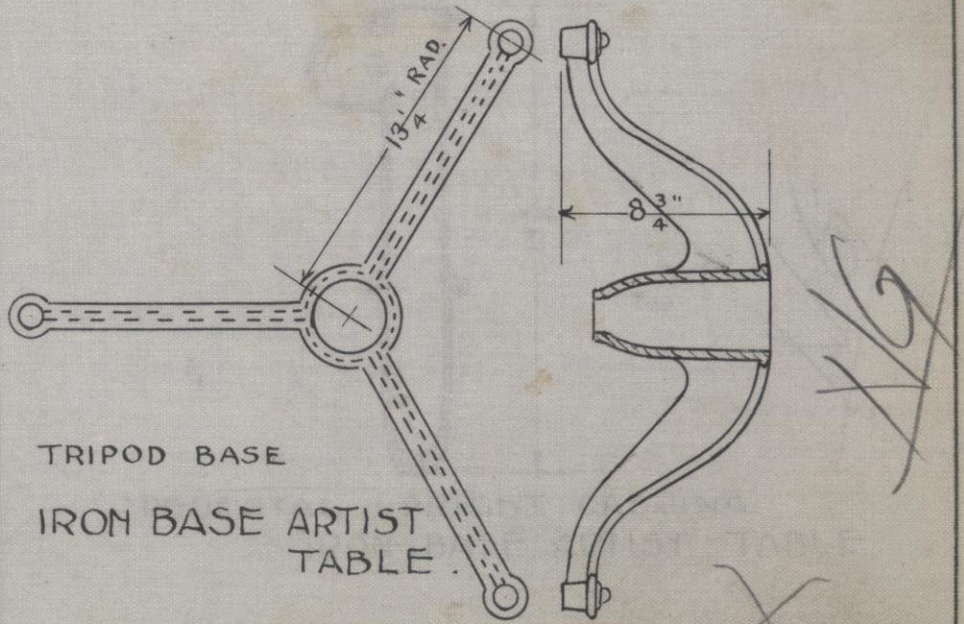

TRIPOD BASE

IRON BASE ARTIST TABLE.

PATTERN NO. 691.

SEE B. P. NO. 12500-W.

445

THE HAMILTON MFG. CO.

DON'T REMOVE THIS LEAF FROM BOOK

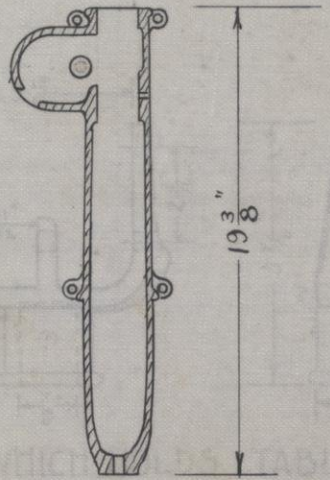

PEDESTAL UPRIGHT CASTING
IRON BASE ARTIST TABLE.

PATTERN NO. 690.

SEE B. P. NO. 12500-W.

THE HAMILTON MFG. CO.

DON'T REMOVE THIS LEAF FROM BOOK

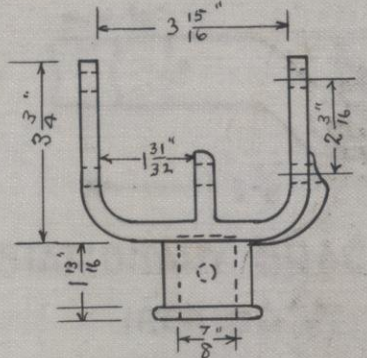

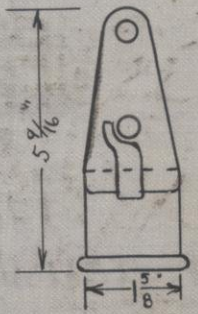

FORK, WHICH HOLDS TABLETOP AND REVOLVES ON PEDESTAL SHAFT.

IRON BASE ARTIST TABLE.

PATTERN NO. 689.

SEE B. P. NO. 12500-W.

THE HAMILTON MFG. CO.

DON'T REMOVE THIS LEAF FROM BOOK

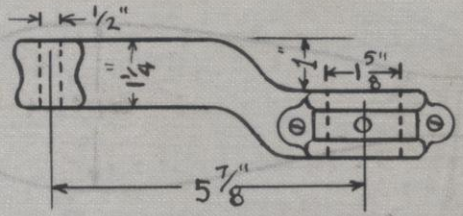

STATIONARY BRACKET
IRON BASE ARTIST TABLE.

PATTERN NO. 688.

SEE B. P. NO. 12500-W.

THE HAMILTON MFG. CO.

DON'T REMOVE THIS LEAF FROM BOOK

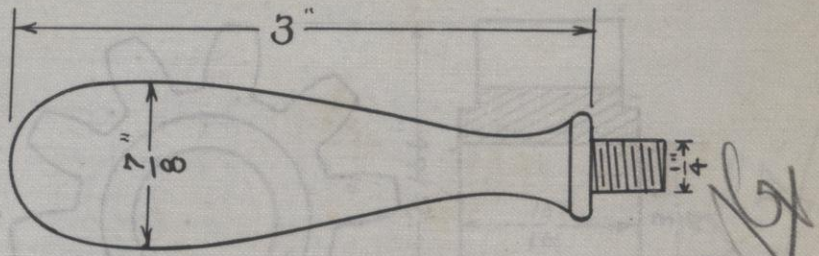

HANDLE FOR HAND WHEEL.

IRON BASE ARTIST TABLE.

PATTERN NO. 687.

SEE B. P. NO. 12500-W.

THE HAMILTON MFG. CO.

DON'T REMOVE THIS LEAF FROM BOOK

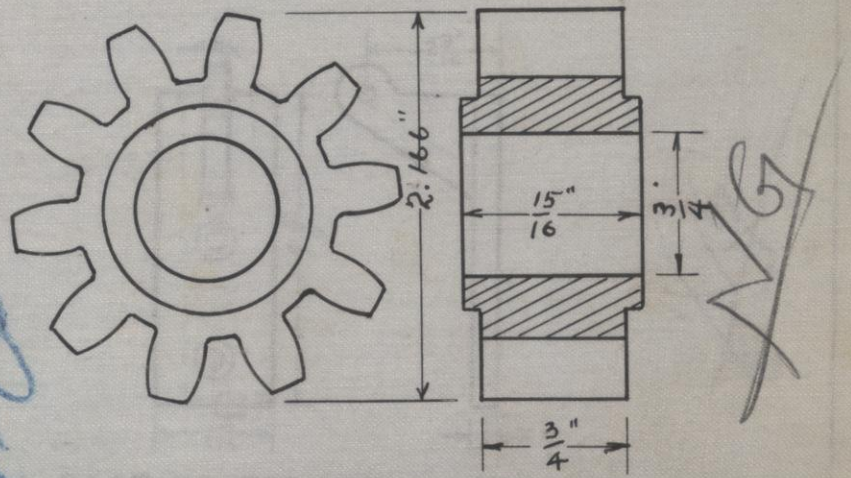

2" GEAR WHEEL, 10 TEETH, 6 DIA. PITCH.
IRON BASE ARTIST TABLE.

PATTERN NO. 686.

SEE B. P. NO. 12500-W

THE HAMILTON MFG. CO.

DON'T REMOVE THIS LEAF FROM BOOK

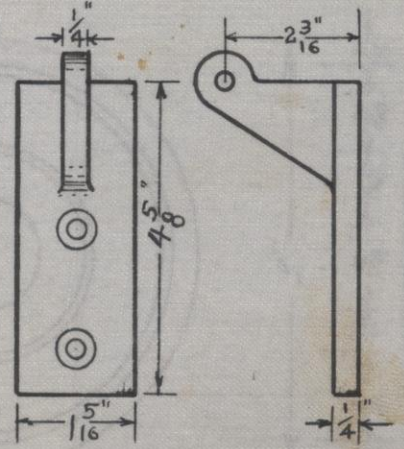

CASTING FOR HORIZONTAL SHELF.
IRON BASE ARTIST TABLE.

PATTERN NO. 685.

SEE B. P. NO. 12500-W. A.

THE HAMILTON MFG. CO.

DON'T REMOVE THIS LEAF FROM BOOK

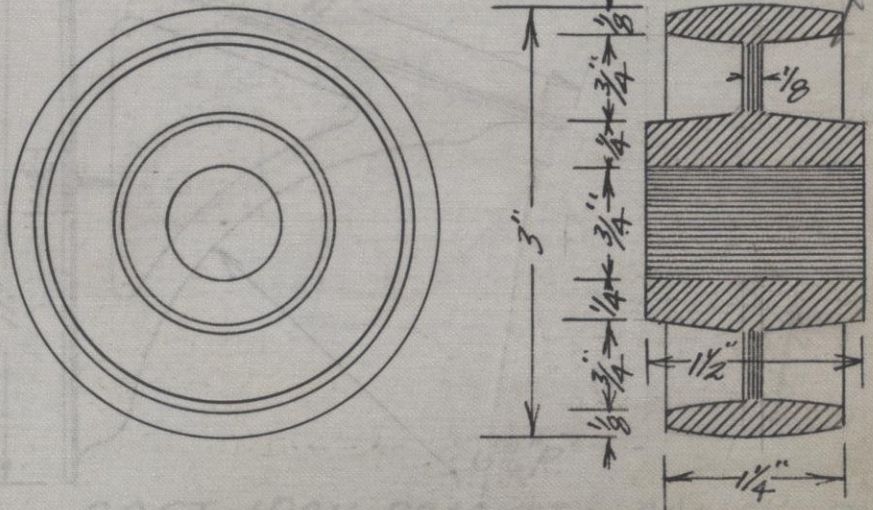

3" CAST IRON WHEEL

PATTERN NO. 684

SEE B. P. NO. 332-C-A

THE HAMILTON MFG. CO.

DON'T REMOVE THIS LEAF FROM BOOK

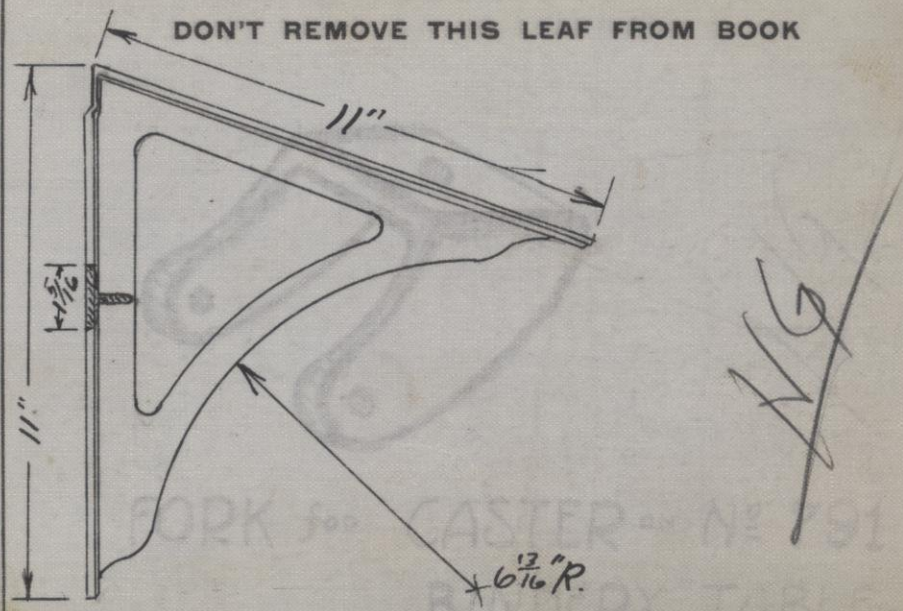

CAST IRON BRACKET for GALLEY DUMP

PATTERN NO. 683

SEE B. P. NO. 332-C

THE HAMILTON MFG. CO.

DON'T REMOVE THIS LEAF FROM BOOK

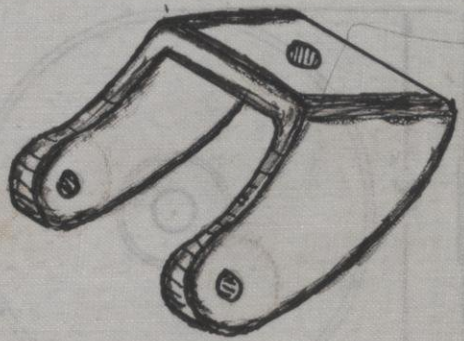

FORK for CASTER on No. 791 BINDERY TABLE

PATTERN NO. 682

SEE B. P. NO. 331-C.

THE HAMILTON MFG. CO.

DON'T REMOVE THIS LEAF FROM BOOK

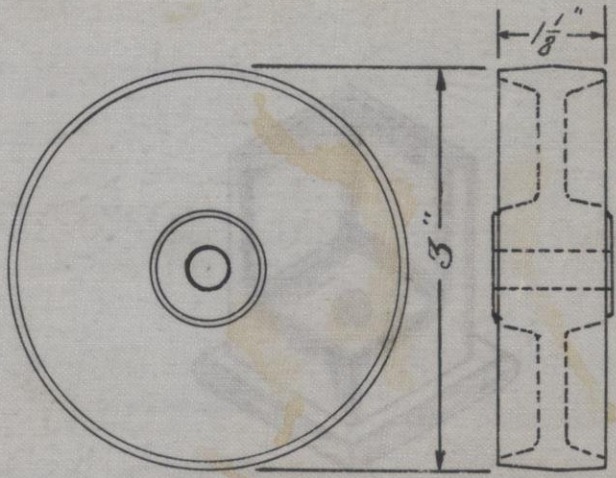

3" WHEEL for CASTER on №791-
BINDERY TABLE

PATTERN NO. 681

SEE B. P. NO. 331-C

435

THE HAMILTON MFG. CO.

DON'T REMOVE THIS LEAF FROM BOOK

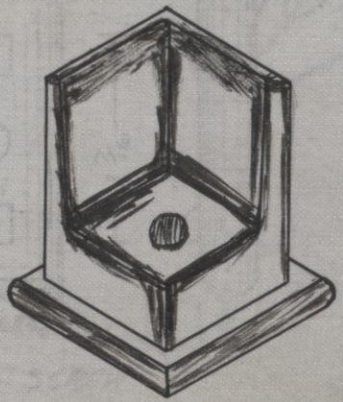

SHOE for CASTER on No 791 BINDERY TABLE

PATTERN NO. 680

SEE B. P. NO. 331-C.

THE HAMILTON MFG. CO.

DON'T REMOVE THIS LEAF FROM BOOK

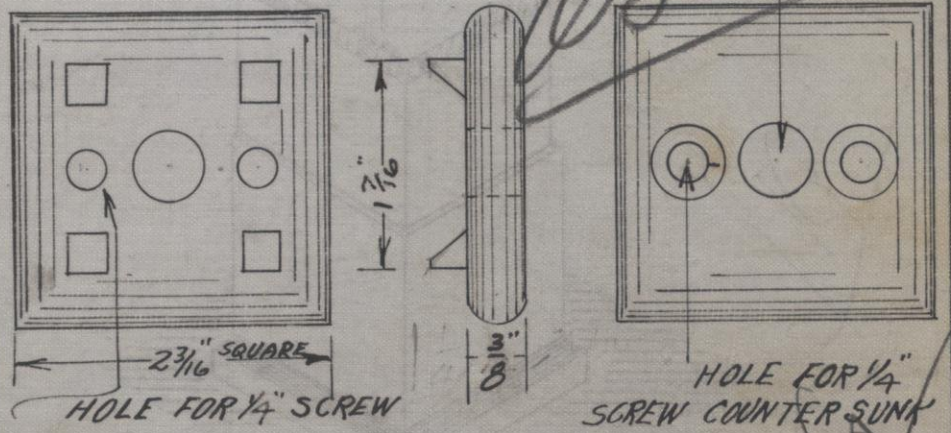

SHOE CASTING FOR No. 110 DENT CABT

PATTERN NO. 679

SEE B. P. NO. 330-C

THE HAMILTON MFG. CO.

DON'T REMOVE THIS LEAF FROM BOOK

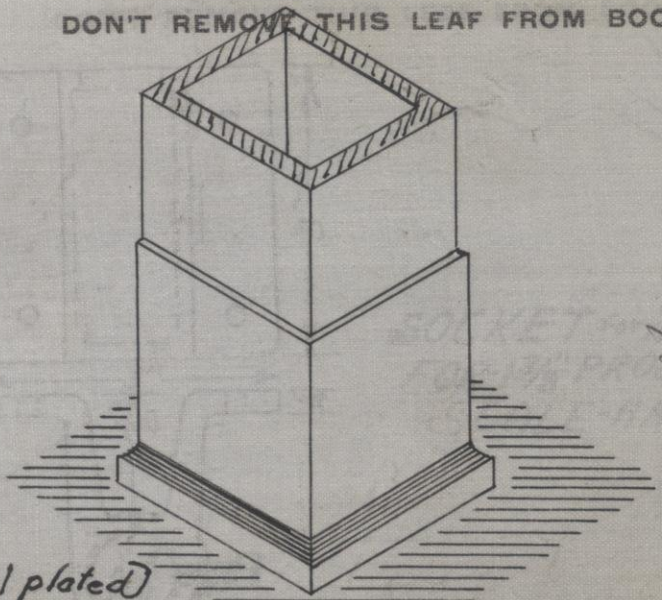

(Nickel plated)

SHOE for Nº 825 TABLES

PATTERN NO. 678

SEE B. P. NO. 329-C

432

THE HAMILTON MFG. CO.

DON'T REMOVE THIS LEAF FROM BOOK

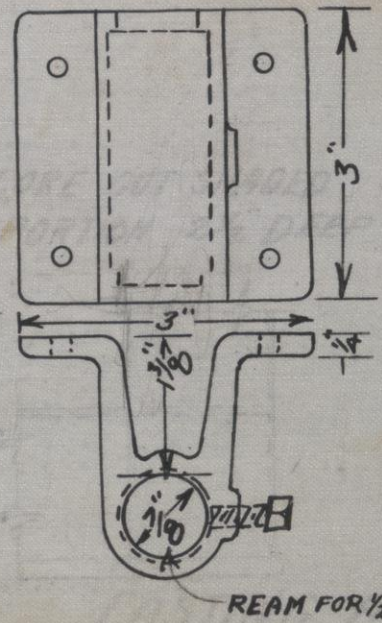

SOCKET for 1/2" PIPE
FOR-1 3/8" PROJECTION
SCALE-HALF SIZE

PATTERN NO. 677

SEE B. P. NO. 328-C

THE HAMILTON MFG. CO.

DON'T REMOVE THIS LEAF FROM BOOK

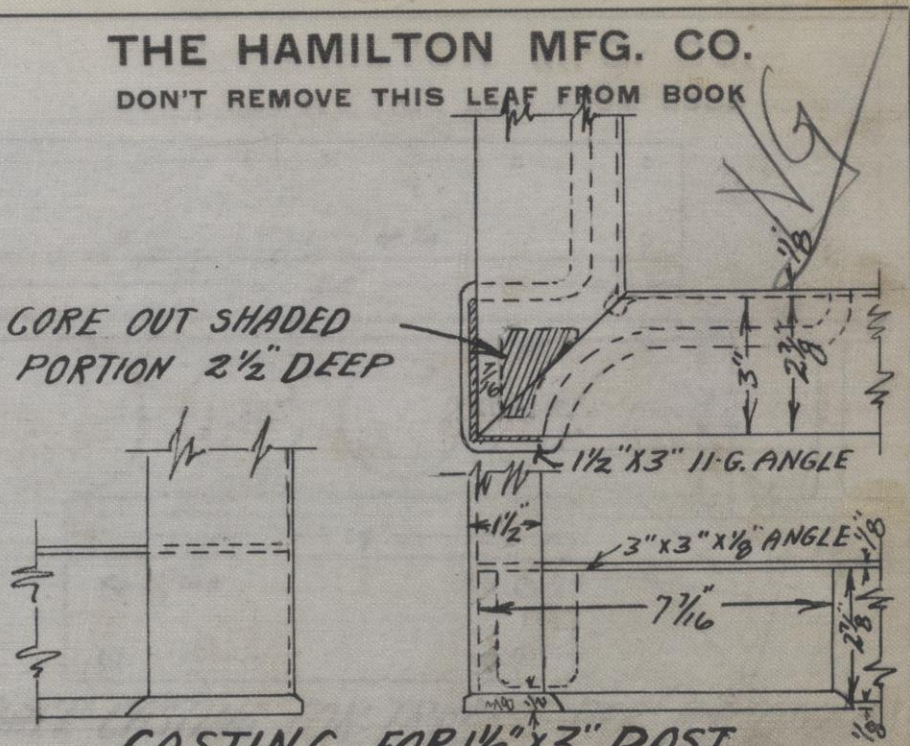

CASTING FOR 1½"X3" POST

PATTERN NO. 676-R & 676-L

SEE B. P. NO. 327-C

THE HAMILTON MFG. CO.

DON'T REMOVE THIS LEAF FROM BOOK

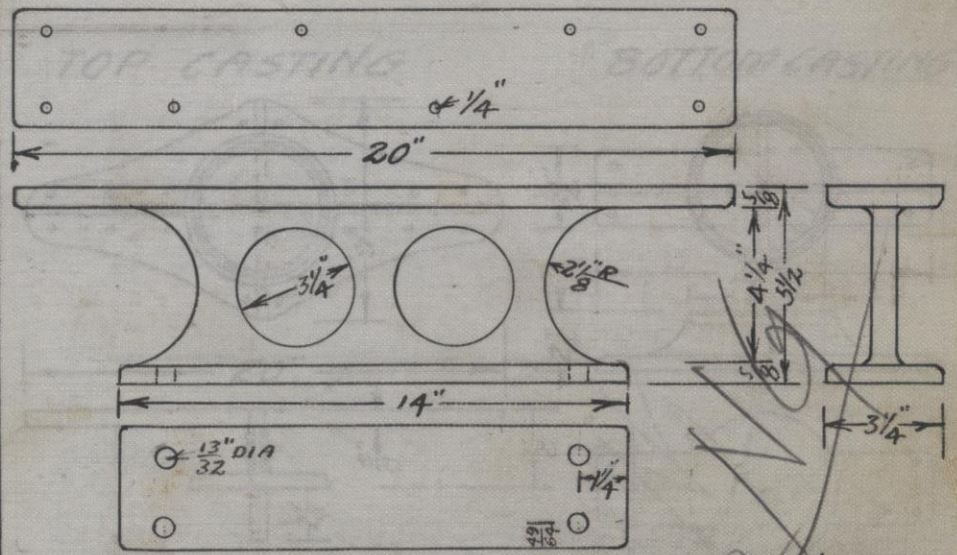

BACK CASTING FOR TRUCK'S PER B.P.# 002951

PATTERN NO. 675

SEE B. P. NO. 326-C

THE HAMILTON MFG. CO.

DON'T REMOVE THIS LEAF FROM BOOK

TOP CASTING

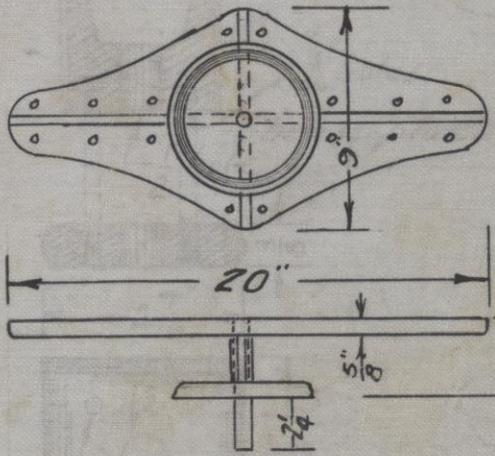

BOTTOM CASTING

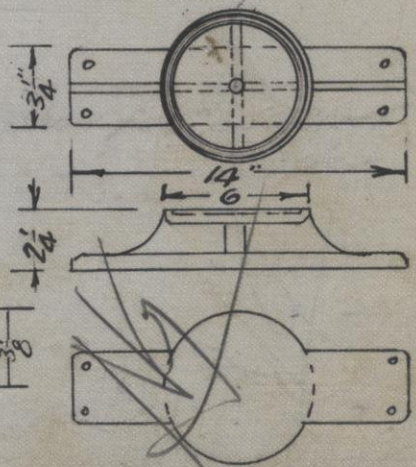

CASTINGS FOR TRUCK PER B.P. No. 002951

PATTERN NO. 674

SEE B. P. NO. 325-C

THE HAMILTON MFG. CO.

DON'T REMOVE THIS LEAF FROM BOOK

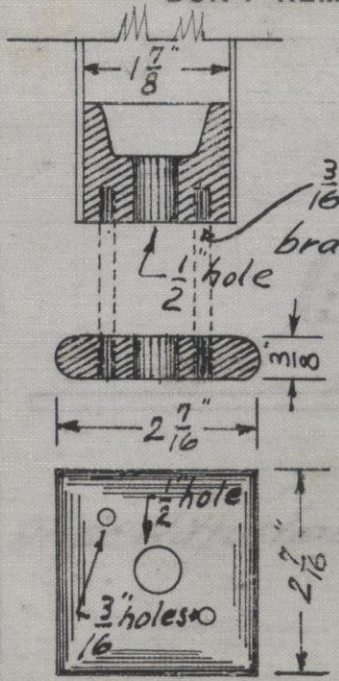

brass-plated shoe for #824 Steel desk.

PATTERN NO. 671.

SEE B. P. NO. 322-C.

THE HAMILTON MFG. CO.

DON'T REMOVE THIS LEAF FROM BOOK

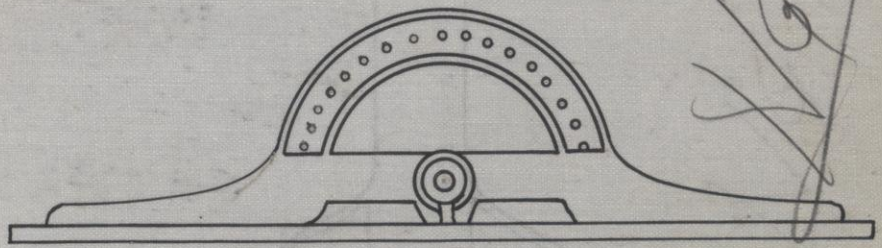

Angle Adjustment for Adj drawing table

PATTERN NO. 670

SEE B. P. NO. 12505-B.

THE HAMILTON MFG. CO.

DON'T REMOVE THIS LEAF FROM BOOK

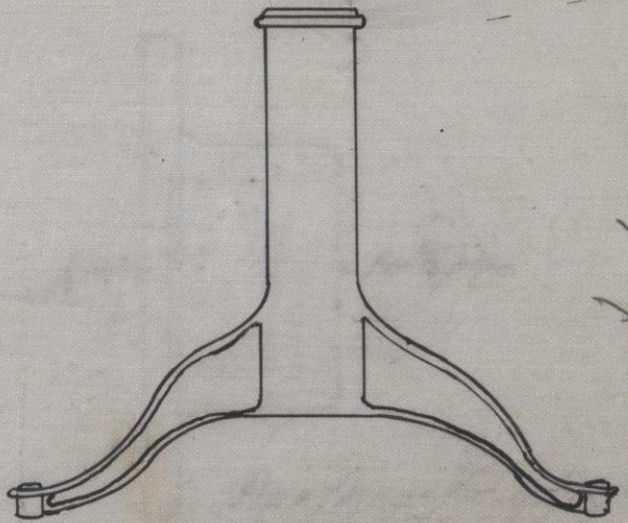

Leg for Adj Drawing Table

PATTERN NO. 669

SEE B. P. NO. 12505-C

THE HAMILTON MFG. CO.

DON'T REMOVE THIS LEAF FROM BOOK

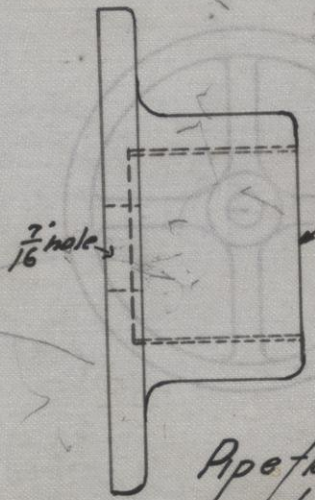

Pipe flange for adjustable drawing table.

PATTERN NO. 668

SEE B. P. NO. 12505-A.

THE HAMILTON MFG. CO.

DON'T REMOVE THIS LEAF FROM BOOK

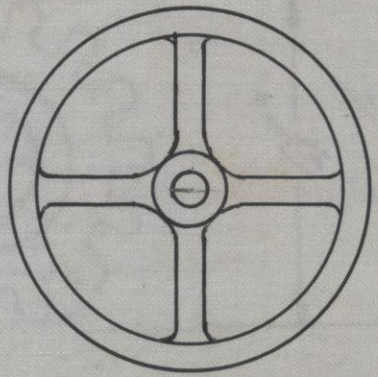

Hand Wheel for Adj' drawing table.

PATTERN NO. 667

SEE B. P. NO. 12505-A.

THE HAMILTON MFG. CO.

DON'T REMOVE THIS LEAF FROM BOOK

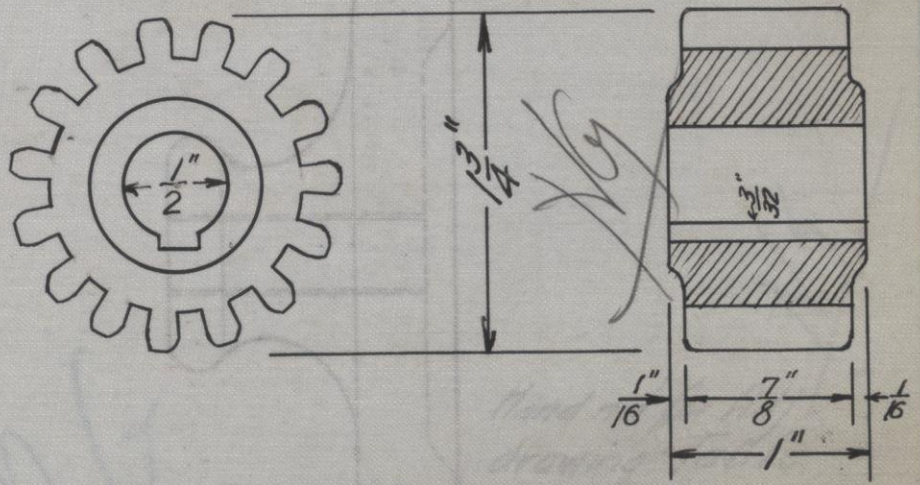

Cog Wheel for Adj. Drawing Table.

PATTERN NO. 666

SEE B. P. NO. 12505-A

THE HAMILTON MFG. CO.

DON'T REMOVE THIS LEAF FROM BOOK

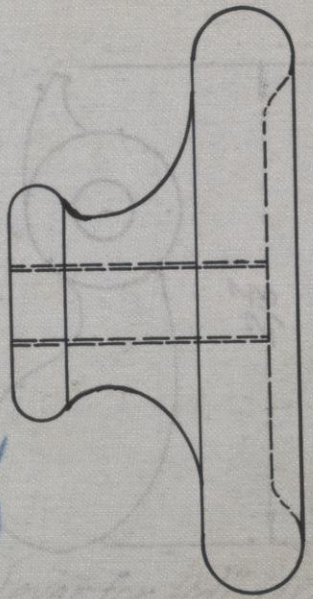

Hand nut for Adj drawing Table.

PATTERN NO. 665

SEE B. P. NO. 12505-A.

THE HAMILTON MFG. CO.

DON'T REMOVE THIS LEAF FROM BOOK

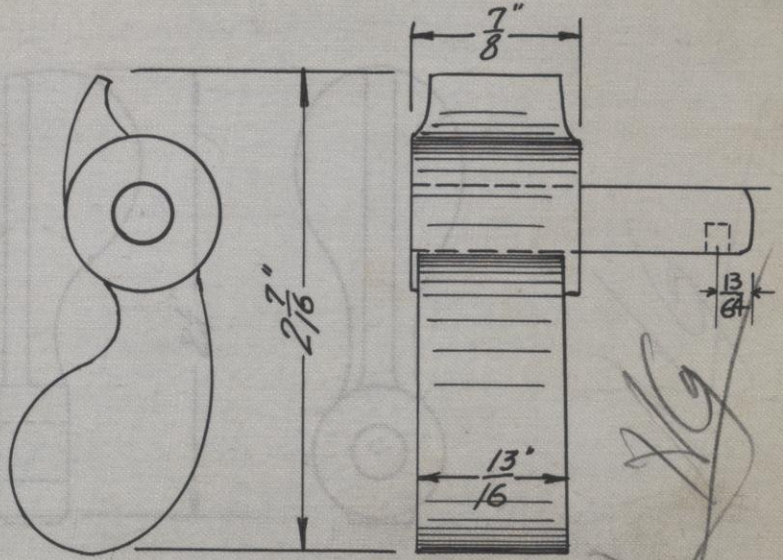

Trip lever for Adj drawing table.

PATTERN NO. 664

SEE B. P. NO. 12505-A.

THE HAMILTON MFG. CO.

DON'T REMOVE THIS LEAF FROM BOOK

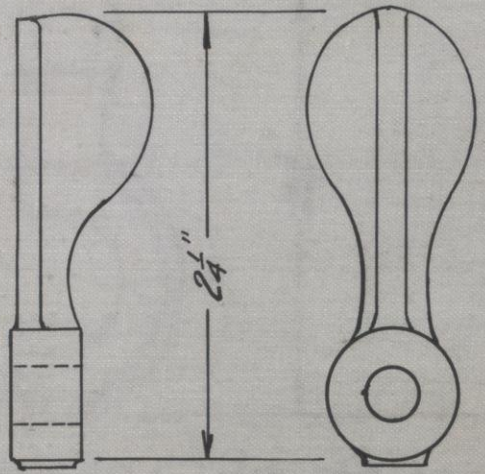

Lever for Adjustable drawing table.

PATTERN NO. 663

SEE B. P. NO. *12505-A.*

THE HAMILTON MFG. CO.

DON'T REMOVE THIS LEAF FROM BOOK

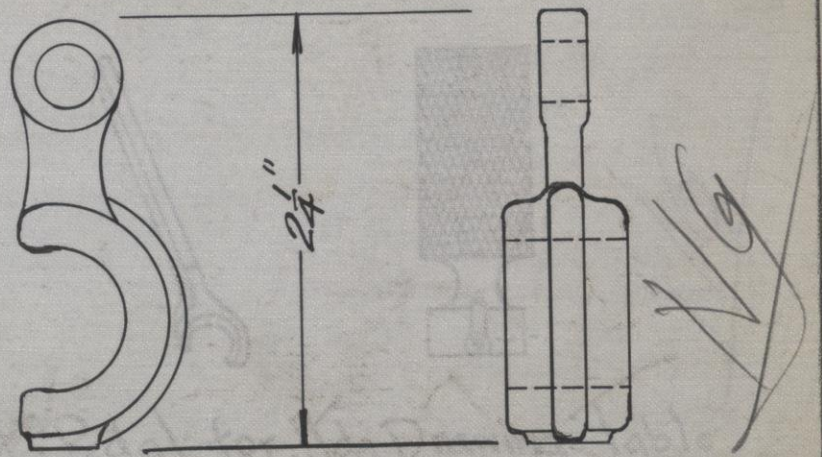

BOTTOM ADJ. ARM FOR ADJ. DRWG TABLE

PATTERN NO. 662

SEE B. P. NO. 12505-A

THE HAMILTON MFG. CO.

DON'T REMOVE THIS LEAF FROM BOOK

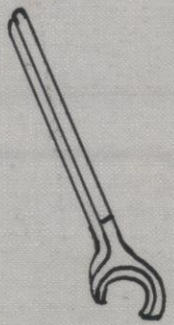



Foot Pedal for Adj. Drawing Table

PATTERN NO. 661

SEE B. P. NO. 12505-A

THE HAMILTON MFG. CO.

DON'T REMOVE THIS LEAF FROM BOOK

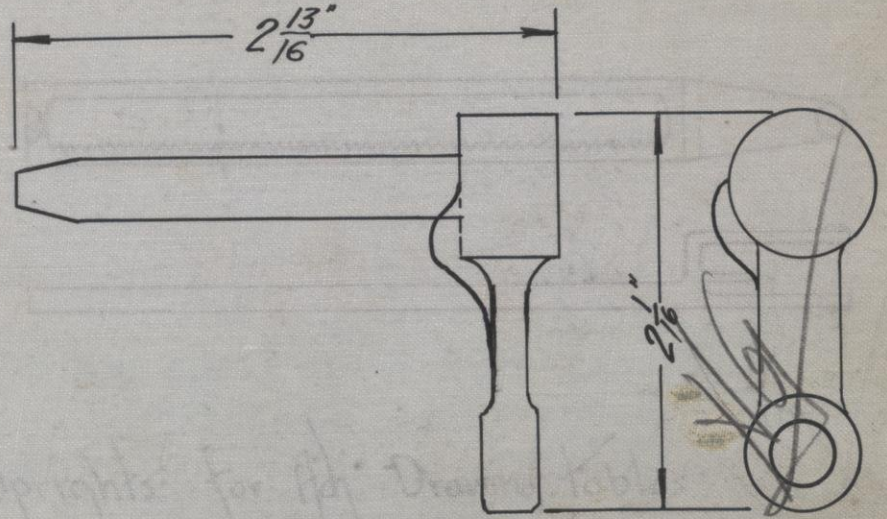

Top adj arm for adj drawing table.

PATTERN NO. 660 R & L

SEE B. P. NO. 12505-A.

THE HAMILTON MFG. CO.

DON'T REMOVE THIS LEAF FROM BOOK

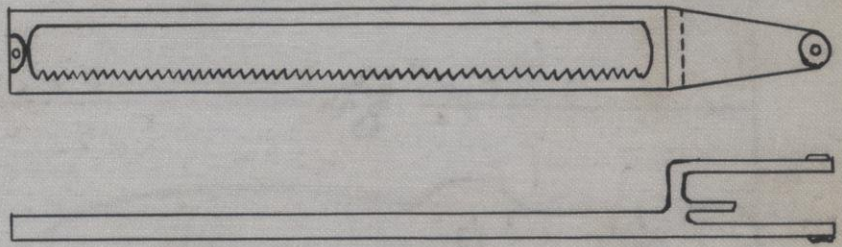

Uprights for Adj Drawing Tables

PATTERN NO. 659 R&L

SEE B. P. NO. 12505-A.

THE HAMILTON MFG. CO.

DON'T REMOVE THIS LEAF FROM BOOK

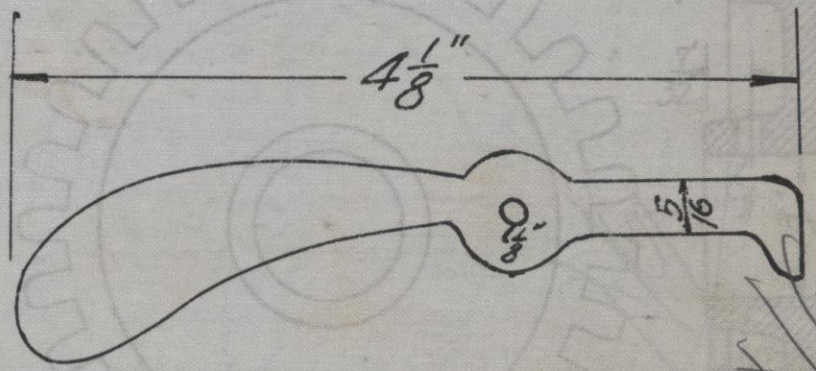

Lever for Artists Table.

PATTERN NO. 658

SEE B. P. NO. 12500-W-A.

THE HAMILTON MFG. CO.

DON'T REMOVE THIS LEAF FROM BOOK

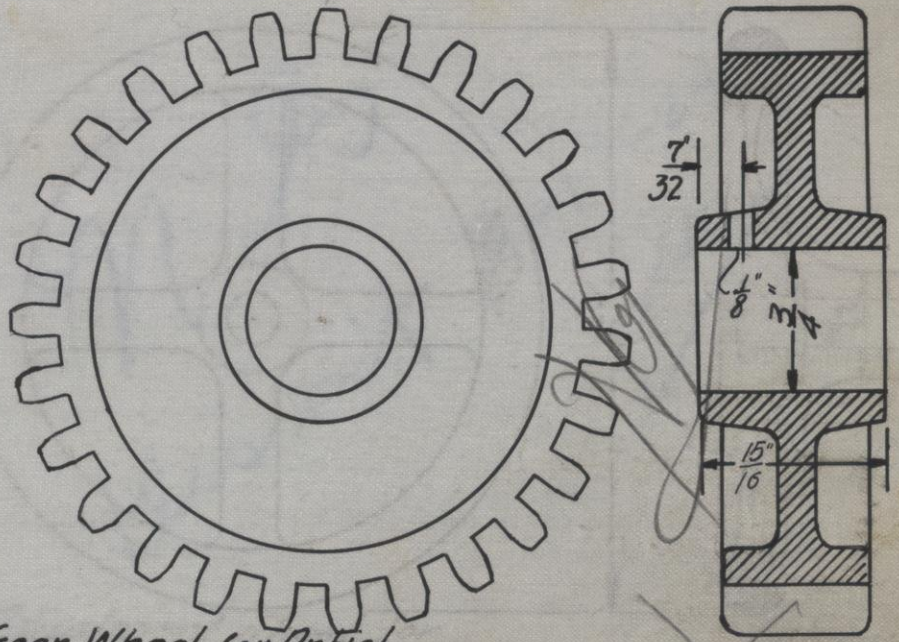

Gear Wheel for Artist Table

PATTERN NO. 657

SEE B. P. NO. 12500-W.-A

THE HAMILTON MFG. CO.

DON'T REMOVE THIS LEAF FROM BOOK

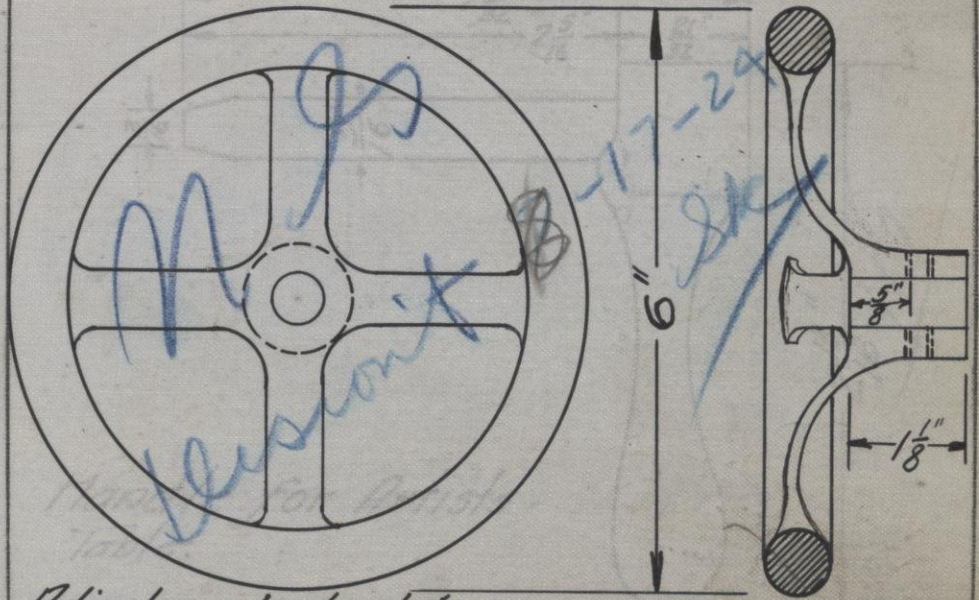

Adjustment wheel for Artists Table.

PATTERN NO. 656

SEE B. P. NO. 12500-W-A.

THE HAMILTON MFG. CO.

DON'T REMOVE THIS LEAF FROM BOOK

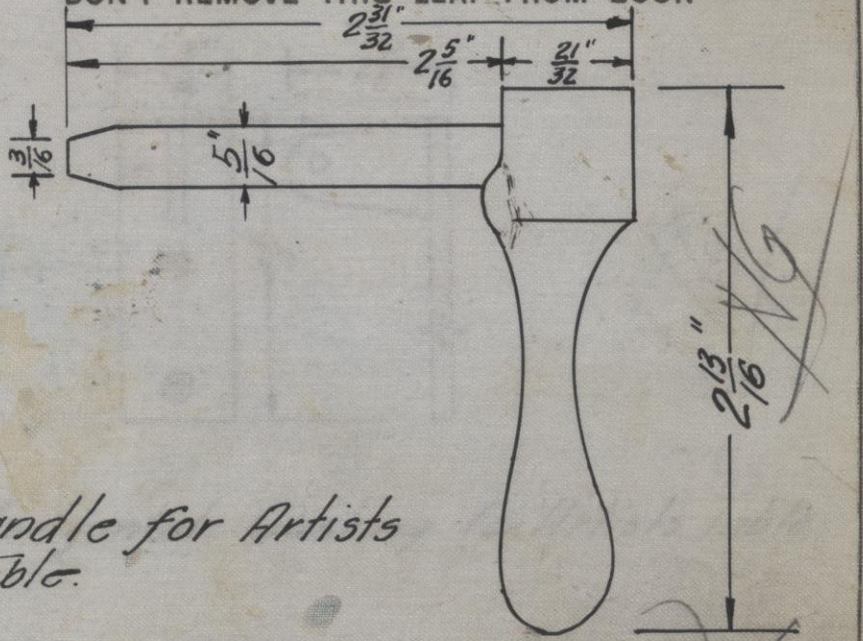

Handle for Artists Table.

PATTERN NO. 655

SEE B. P. NO. 12500-W.A.

THE HAMILTON MFG. CO.

DON'T REMOVE THIS LEAF FROM BOOK

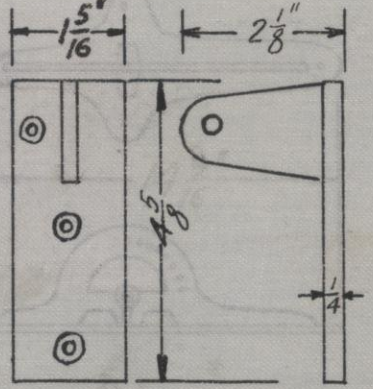

M.G

1/9

Horizontal Casting For Artists Table.

PATTERN NO. 654

SEE B. P. NO. 12500 - A

THE HAMILTON MFG. CO.

DON'T REMOVE THIS LEAF FROM BOOK

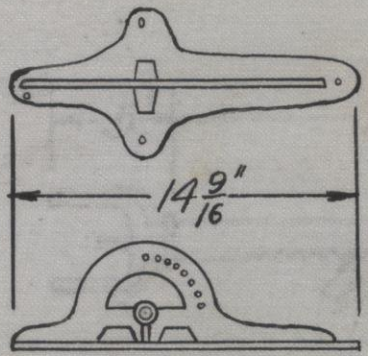

NG

Angle Adjustment for Artists Table.

PATTERN NO. 653

SEE B. P. NO. 12500-W-A

THE HAMILTON MFG. CO.

DON'T REMOVE THIS LEAF FROM BOOK

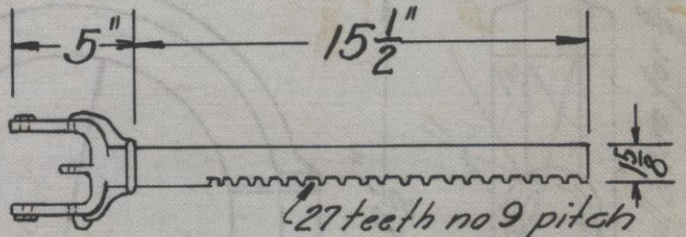

Fork & standard for Artists Table

PATTERN NO. 652

SEE B. P. NO. 12500-W-A

THE HAMILTON MFG. CO.

DON'T REMOVE THIS LEAF FROM BOOK

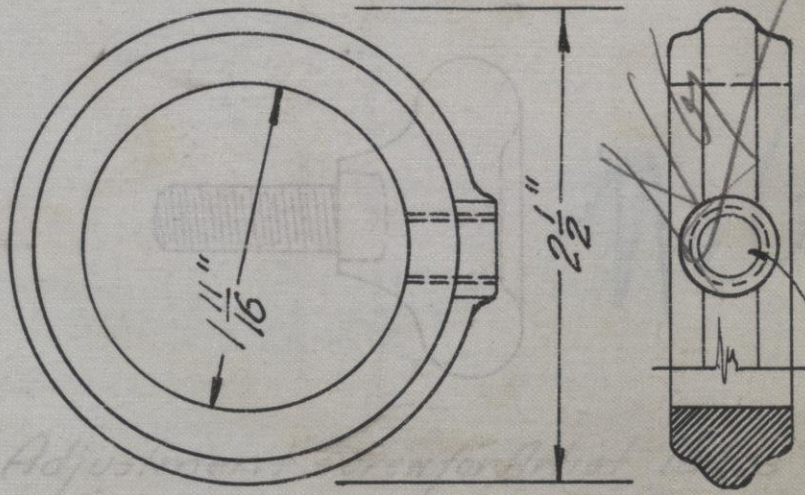

Adjustment ring for artists table.

PATTERN NO. 651

SEE B. P. NO. 12500-A.

THE HAMILTON MFG. CO.

DON'T REMOVE THIS LEAF FROM BOOK

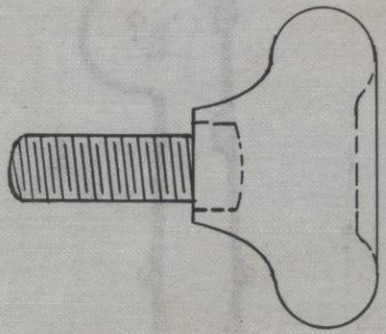

W. G.

Adjustment screw for Artist Table

PATTERN NO. 650

SEE B. P. NO. 12500-A.

THE HAMILTON MFG. CO.

DON'T REMOVE THIS LEAF FROM BOOK



Upright for Artists Table

PATTERN NO. 649

SEE B. P. NO. 12500-A

THE HAMILTON MFG. CO.

DON'T REMOVE THIS LEAF FROM BOOK

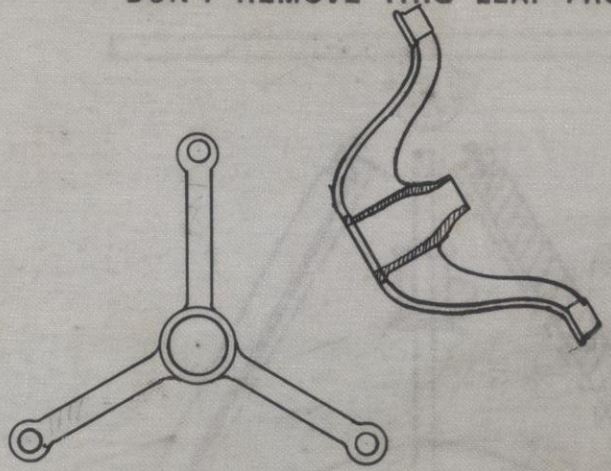

Stand for Artists Table.

PATTERN NO. 648

SEE B. P. NO. 12500-W

THE HAMILTON MFG. CO.

DON'T REMOVE THIS LEAF FROM BOOK

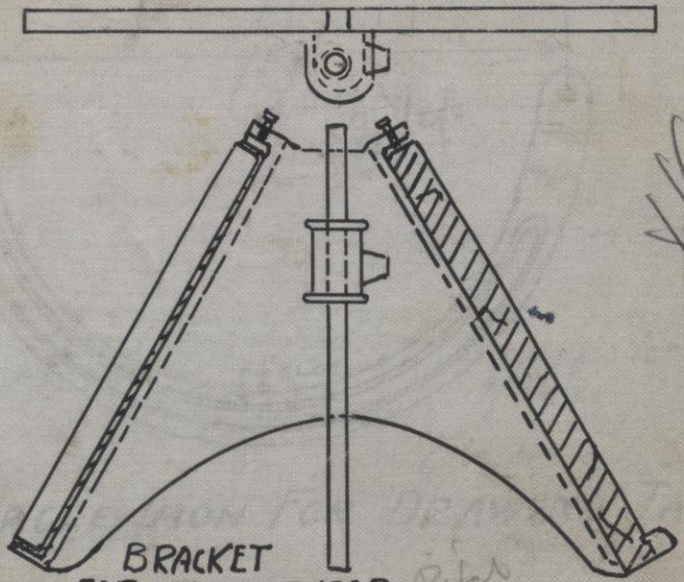

BRACKET
FOR 12" OVERHEAD
BANK

PATTERN NO. 647

SEE B. P. NO. 321-C.

THE HAMILTON MFG. CO.

DON'T REMOVE THIS LEAF FROM BOOK

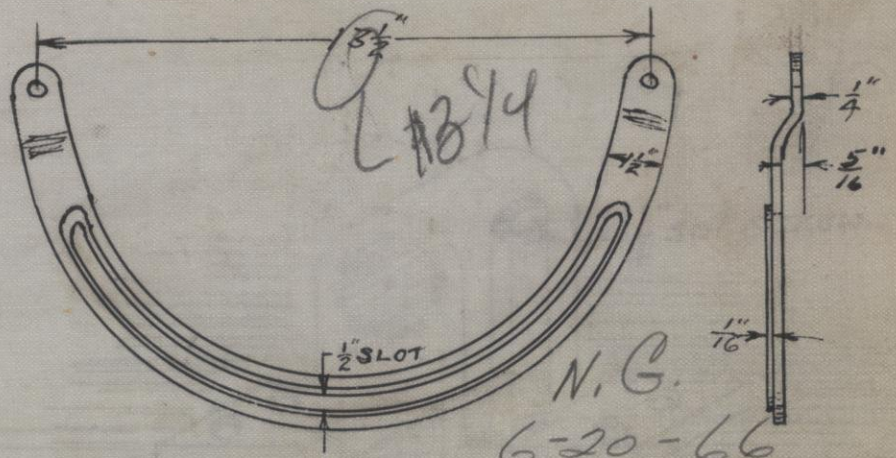

#1814

N. G.
6-20-66

CIRCLE IRON FOR DRAWING TABLE

PATTERN NO. 646

SEE B. P. NO. 320-C

401

THE HAMILTON MFG. CO.

DON'T REMOVE THIS LEAF FROM BOOK

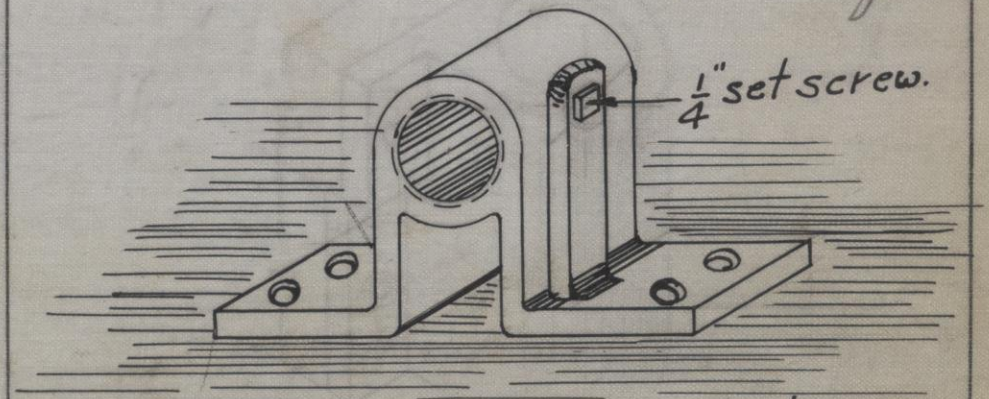

Socket for 1/2" conduit to support wiring. for #542 cut cost cabinet.

PATTERN NO. 645

SEE B. P. NO. 319-C.

THE HAMILTON MFG. CO.

DON'T REMOVE THIS LEAF FROM BOOK

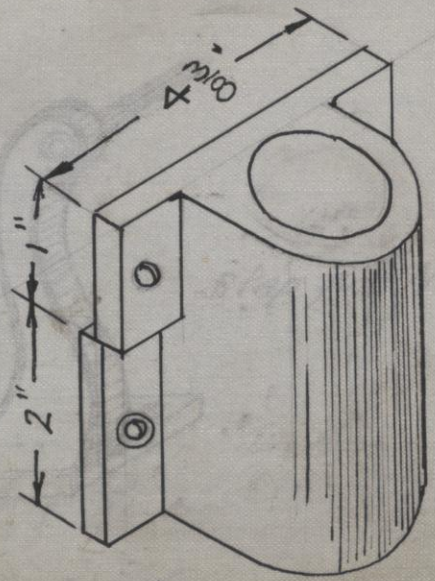

NG

SOCKET FOR 1¼" PIPE FOR ¼" OVERHANG

PATTERN NO. 644

SEE B. P. NO. 318-C

394

THE HAMILTON MFG. CO.

DON'T REMOVE THIS LEAF FROM BOOK



Step for No. 2 Bellows.

PATTERN NO. 643

SEE B. P. NO. 317-C.

398

THE HAMILTON MFG. CO.

DON'T REMOVE THIS LEAF FROM BOOK

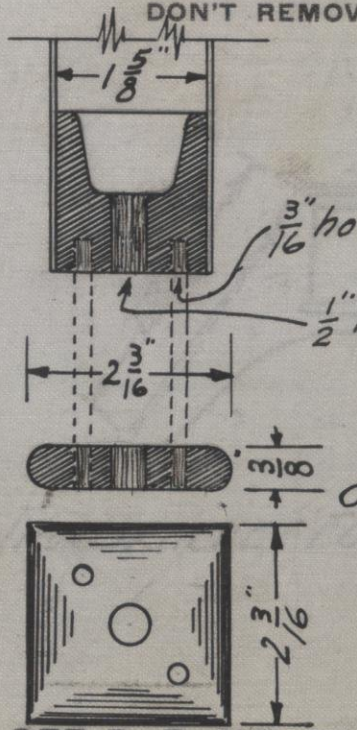

Cast iron shoe for Steel dental cab't. to be nickel plated.

PATTERN NO. 642

SEE B. P. NO. 316-C.

THE HAMILTON MFG. CO.

DON'T REMOVE THIS LEAF FROM BOOK

12 3/4

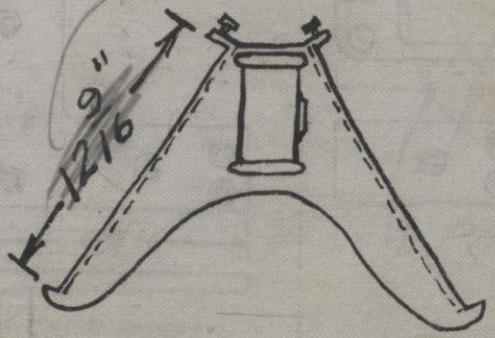

Use Intermediate Bracket 356

No 6

IRON BRACKET FOR 1¼" PIPE

PATTERN NO. 640

SEE B. P. NO. 314-C

THE HAMILTON MFG. CO.

DON'T REMOVE THIS LEAF FROM BOOK

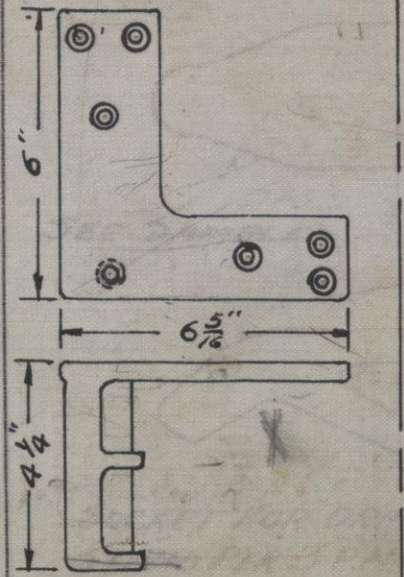

PATTERN No. 639-W

SEE B. P. NO. 313-C

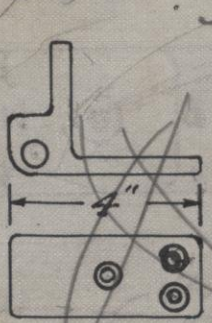

PATTERN No. 639-S

SWINGING TRAY
FOR
SINGLE TIER CABT'S

PATTERN NO. 639-S & 639-W

A.H. VOELKER

THE HAMILTON MFG. CO.

DON'T REMOVE THIS LEAF FROM BOOK

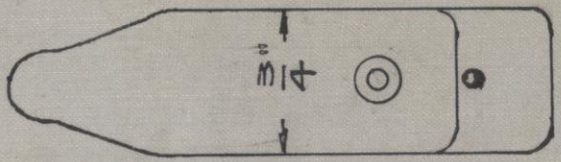

SEE SAMPLE

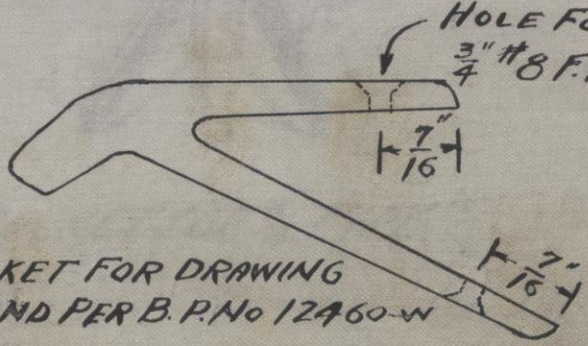

SOCKET FOR DRAWING
STAND PER B. P. No 12460-W
12465-W

PATTERN NO. 638

SEE B. P. NO. 312-C

No Drawing

THE HAMILTON MFG. CO.

DON'T REMOVE THIS LEAF FROM BOOK

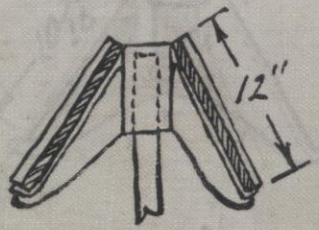

BRACKET FOR 3/4" PIPE.

PATTERN NO. 637

SEE B. P. NO. 311-C

6

THE HAMILTON MFG. CO.

DON'T REMOVE THIS LEAF FROM BOOK



IRON BRACKET for 1" PIPE

PATTERN NO. 636

SEE B. P. NO. 310-C

9

THE HAMILTON MFG. CO.

DON'T REMOVE THIS LEAF FROM BOOK

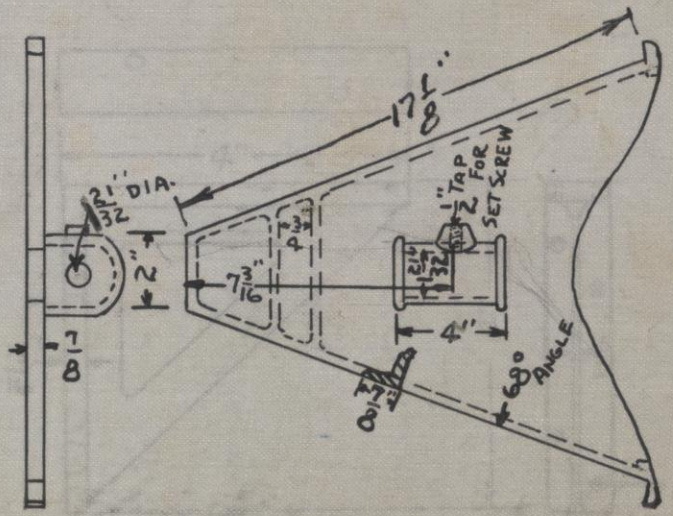

SPECIAL OVERHEAD BANK BRACKET

PATTERN NO. 635

SEE B. P. NO. 309-C

THE HAMILTON MFG. CO.

DON'T REMOVE THIS LEAF FROM BOOK

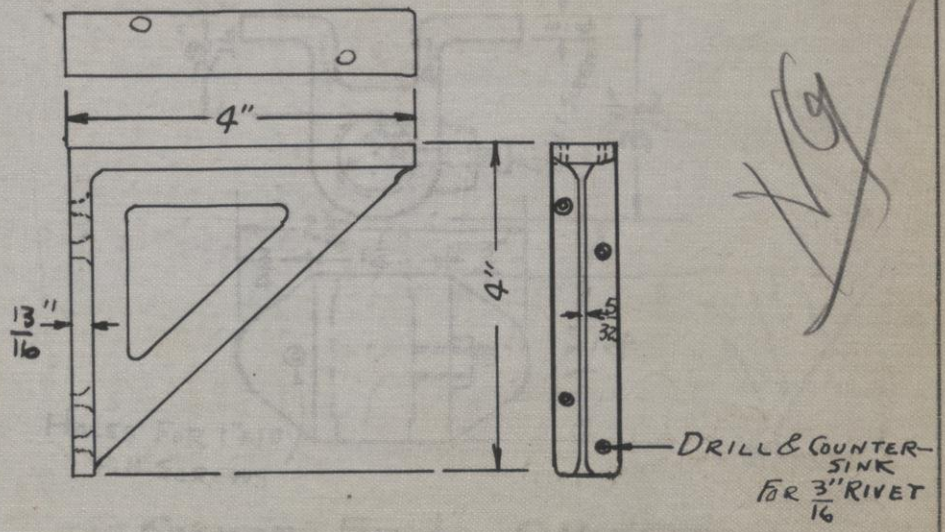

PATTERN NO. 634

SEE B. P. NO. 308-C

9

THE HAMILTON MFG. CO.

DON'T REMOVE THIS LEAF FROM BOOK

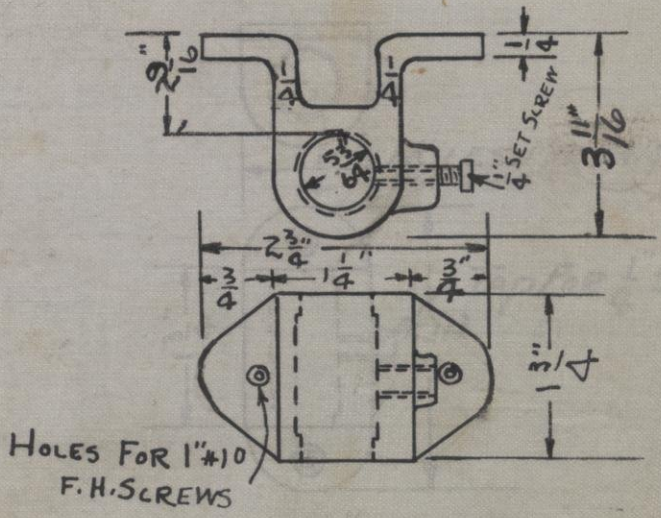

SOCKET FOR 1/2" CONDUIT

PATTERN NO. 633

SEE B. P. NO. 307-C

389

THE HAMILTON MFG. CO.

DON'T REMOVE THIS LEAF FROM BOOK

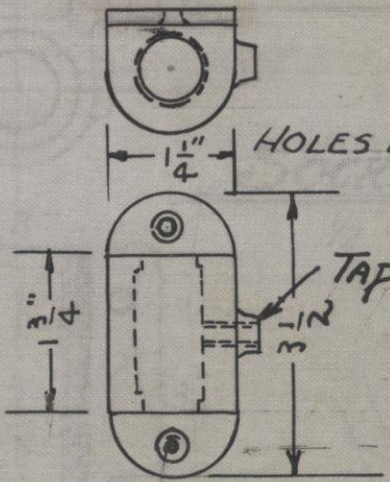

NG

SOCKET FOR 1/2" CONDUIT

PATTERN NO. 632

SEE B. P. NO. 306-C

THE HAMILTON MFG. CO.

DON'T REMOVE THIS LEAF FROM BOOK

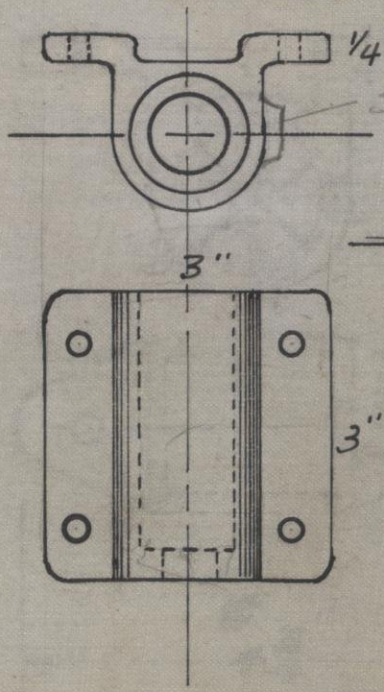

SOCKET FOR 3/4 PIPE.

1/2" Overhang

N 19

SEE B. P. NO. 305-C

PATTERN NO. 631

THE HAMILTON MFG. CO.

DON'T REMOVE THIS LEAF FROM BOOK

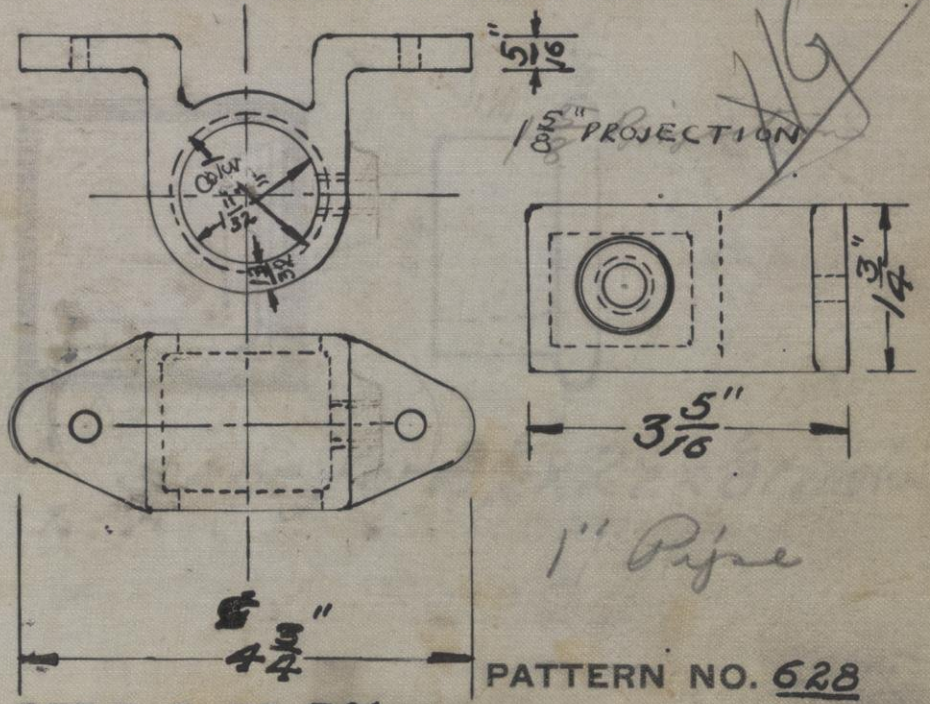

PATTERN NO. 628

SEE B. P. NO. 301-C

THE HAMILTON MFG. CO.

DON'T REMOVE THIS LEAF FROM BOOK

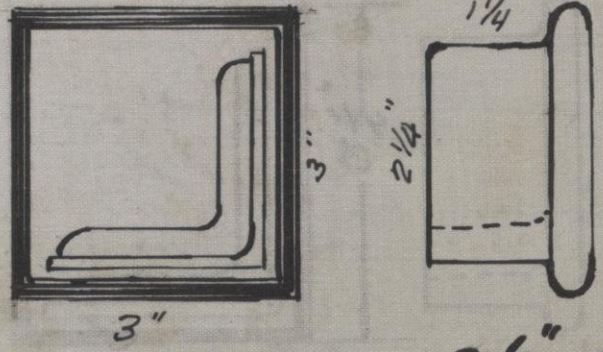

Shoe for 2½" x 2½" x ⅜ Angles

PATTERN NO. 627

SEE B. P. NO. 300-C.

383

THE HAMILTON MFG. CO.

DON'T REMOVE THIS LEAF FROM BOOK

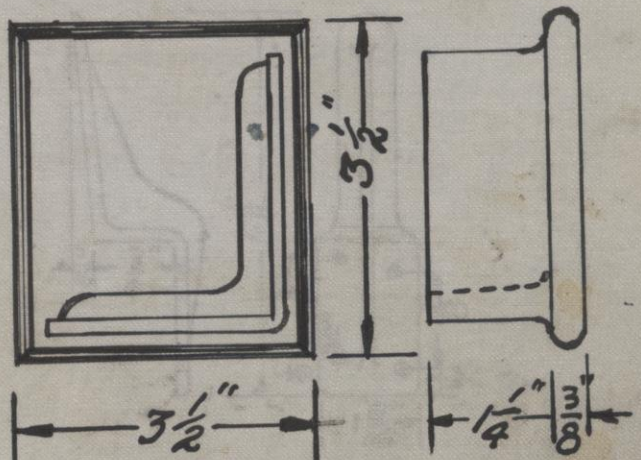

Shoe for 3"x3"x⅛ Angles.

PATTERN NO. 626

SEE B. P. NO. 288-C.

THE HAMILTON MFG. CO.

DON'T REMOVE THIS LEAF FROM BOOK

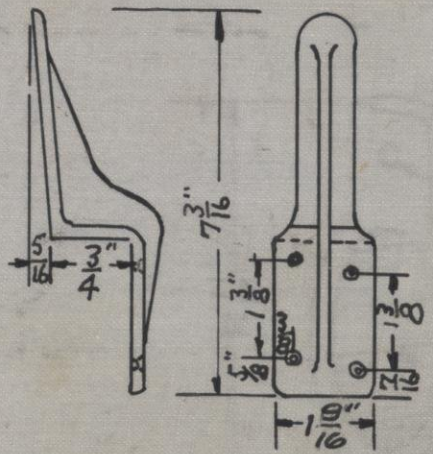

CASE BRACKET FOR AUXILIARY BANK
CUT COST CABT No. 9001

PATTERN NO. 625

SEE B. P. NO. 298-C

THE HAMILTON MFG. CO.

DON'T REMOVE THIS LEAF FROM BOOK

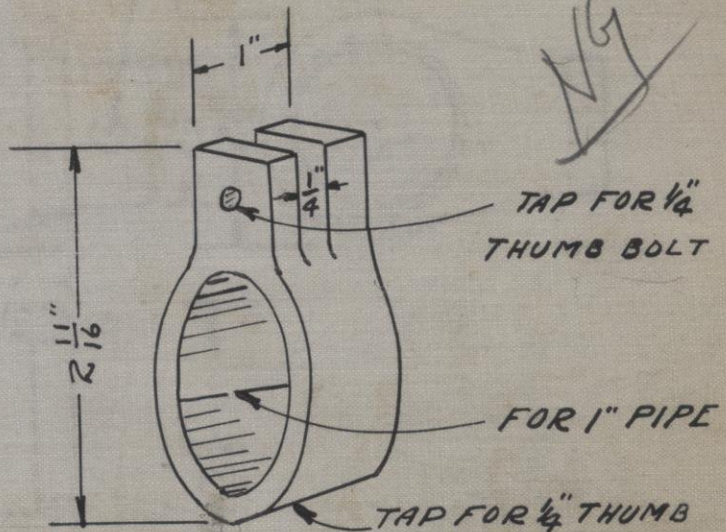

Socket

PATTERN NO. 624

SEE B. P. NO. 297-C

J.S.

THE HAMILTON MFG. CO.

DON'T REMOVE THIS LEAF FROM BOOK

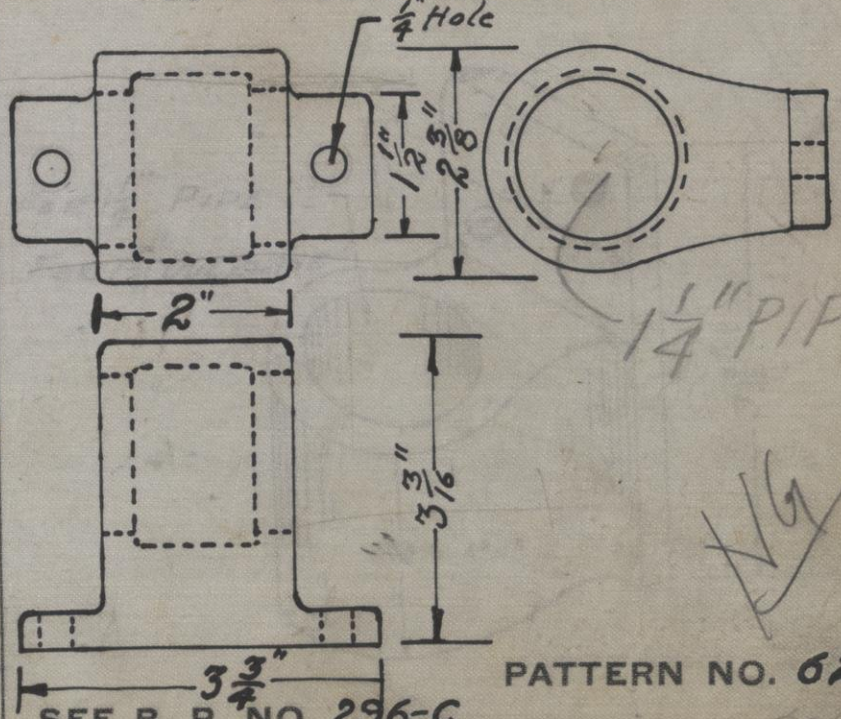

1 1/4" PIPE, lock

NG

PATTERN NO. 623

SEE B. P. NO. 296-C

379

THE HAMILTON MFG. CO.

DON'T REMOVE THIS LEAF FROM BOOK

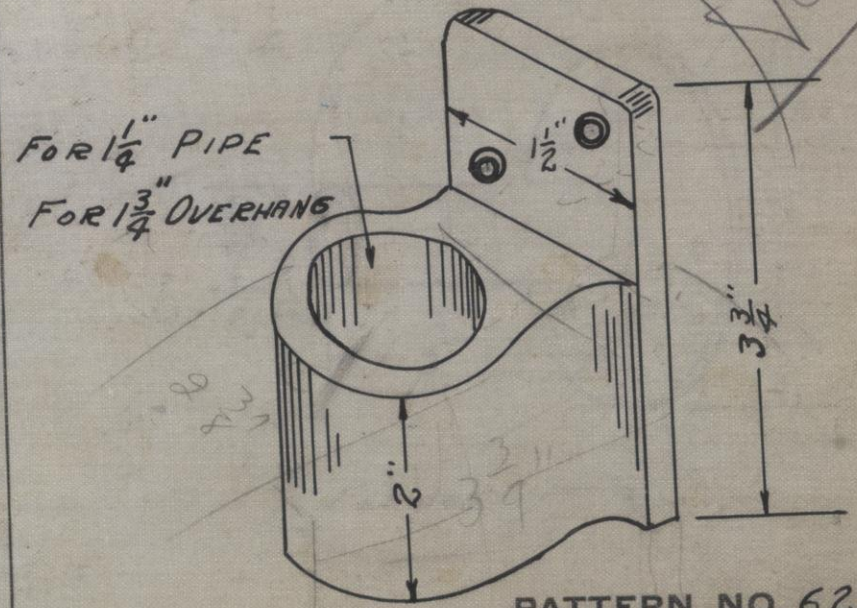

PATTERN NO. 622

SEE B. P. NO. 295-C

THE HAMILTON MFG. CO.

DON'T REMOVE THIS LEAF FROM BOOK

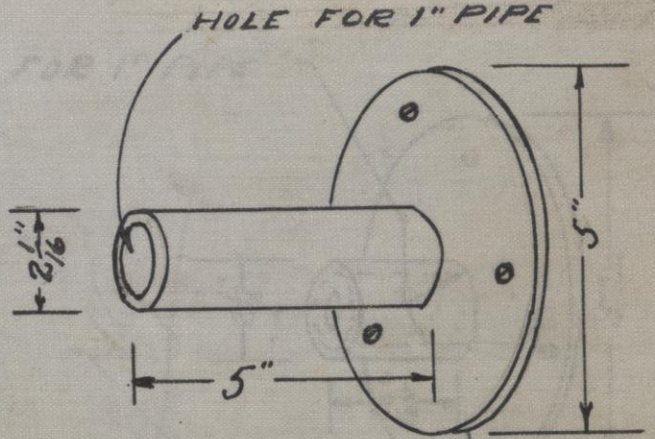

PATTERN NO. 621

SEE B. P. NO. 294-C

THE HAMILTON MFG. CO.

DON'T REMOVE THIS LEAF FROM BOOK

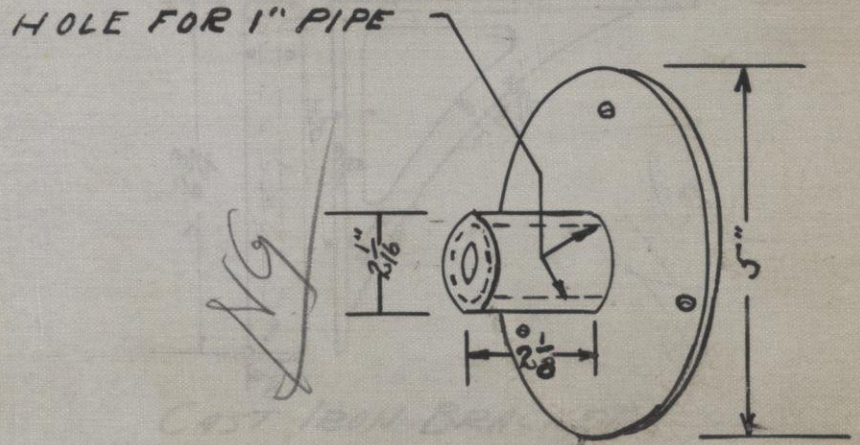

FLANGE

PATTERN NO. 620

SEE B. P. NO. 293-C

THE HAMILTON MFG. CO.

DON'T REMOVE THIS LEAF FROM BOOK

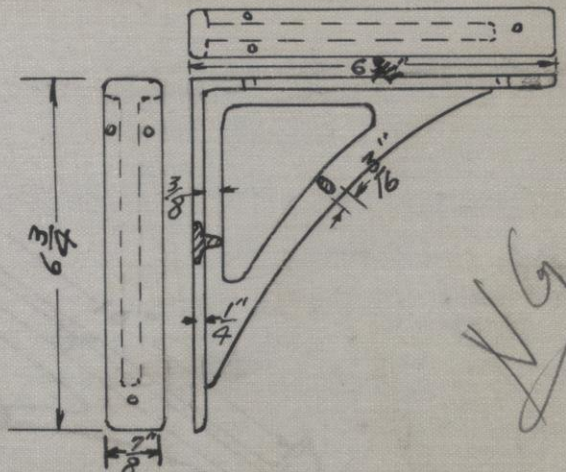

CAST IRON BRACKET

PATTERN NO. 619

SEE B. P. NO. 292-C

375

THE HAMILTON MFG. CO.

DON'T REMOVE THIS LEAF FROM BOOK

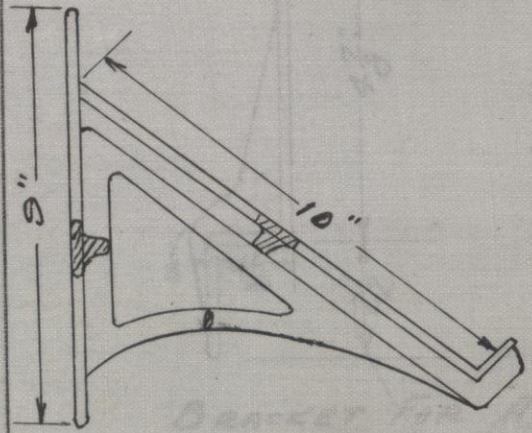

CAST IRON BRACKET

PATTERN NO. 618

SEE B. P. NO. 291-C

THE HAMILTON MFG. CO.

DON'T REMOVE THIS LEAF FROM BOOK

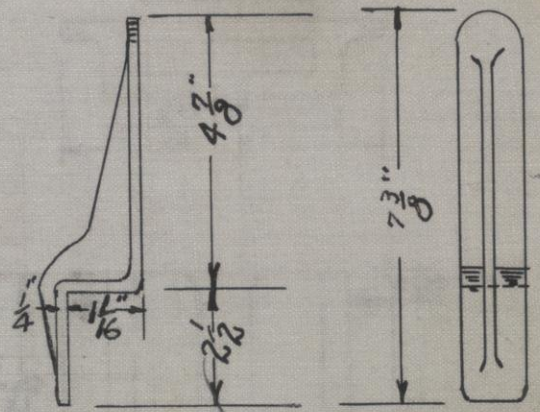

BRACKET FOR AMERICAN CUT COST CABT.

PATTERN NO. 617

SEE B. P. NO. 290-C

373

THE HAMILTON MFG. CO.

DON'T REMOVE THIS LEAF FROM BOOK

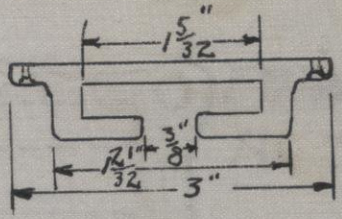

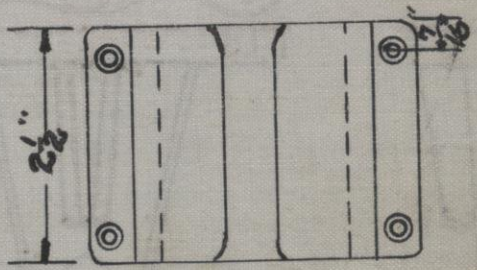

SOCKET FOR BRACKET ON PAT. # 617

PATTERN NO. 616

SEE B. P. NO. 290-C

372

THE HAMILTON MFG. CO.

DON'T REMOVE THIS LEAF FROM BOOK

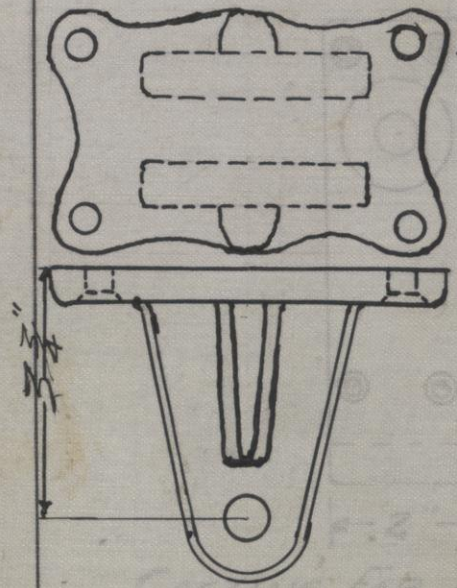

FORK FOR STATIONARY
M& T. R.S. CASTER.

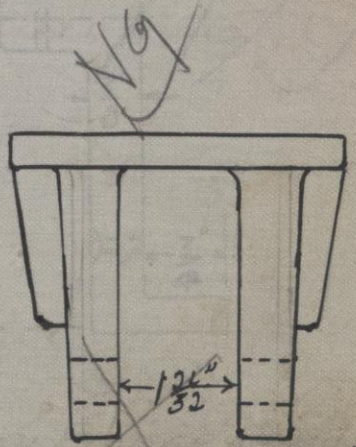

SEE B. P. NO. 287.

PATTERN NO. 615.

THE HAMILTON MFG. CO.

DON'T REMOVE THIS LEAF FROM BOOK

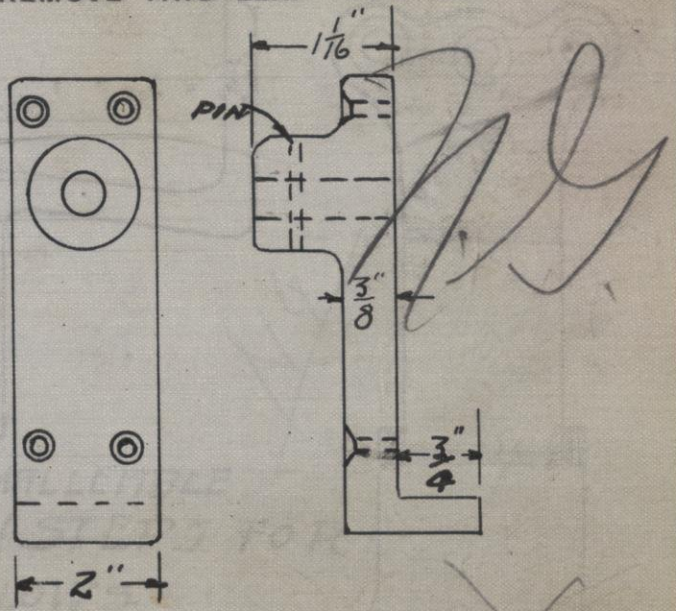

CASTING FOR WAUGH RADIOGRAPHIC UNIT
PATTERN NO. 614

SEE B. P. NO. 9426-A

THE HAMILTON MFG. CO.

DON'T REMOVE THIS LEAF FROM BOOK

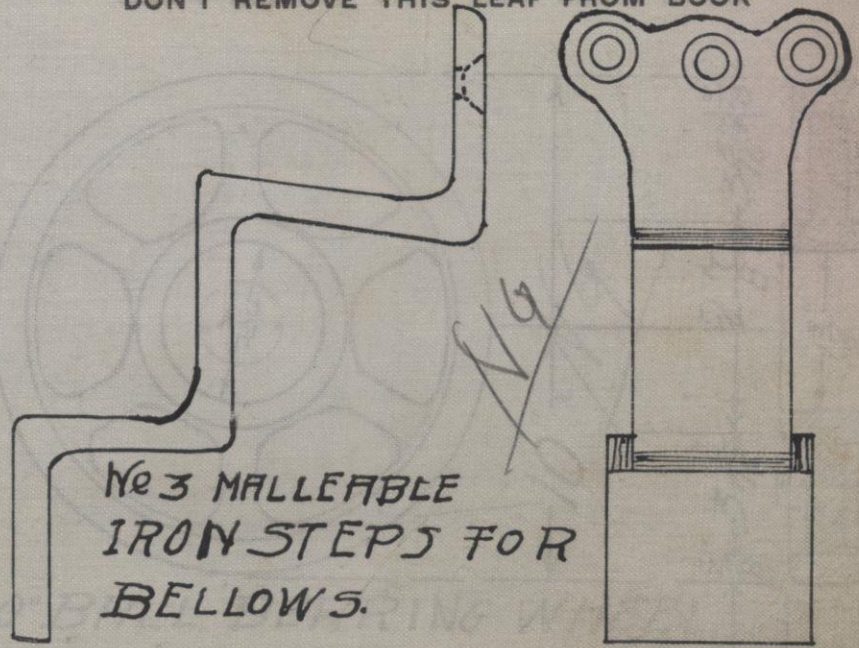

No 3 MALLEABLE
IRON STEPS FOR
BELLOWS.

PATTERN NO. 613.

SEE B. P. NO. 286.

THE HAMILTON MFG. CO.

DON'T REMOVE THIS LEAF FROM BOOK

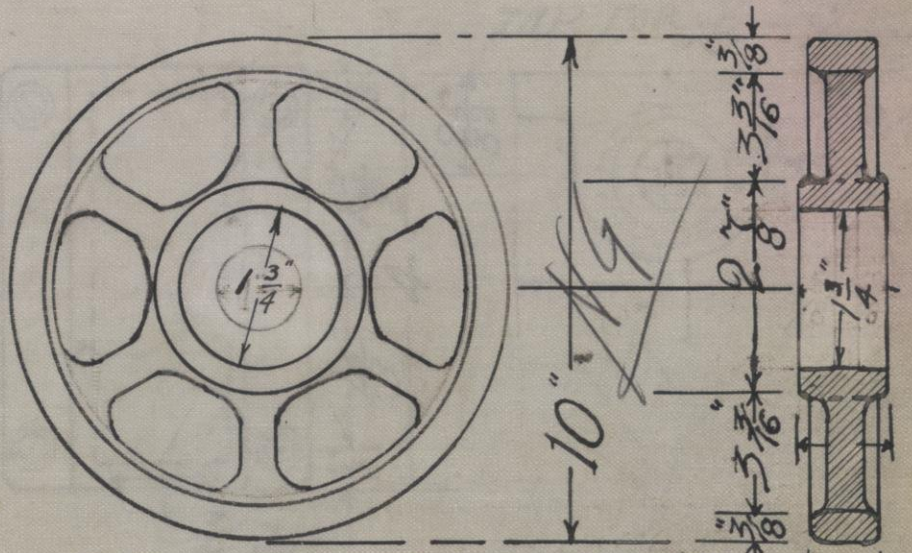

10" BALL BEARING WHEEL

PATTERN NO. 611.

SEE B. P. NO. 283C.

THE HAMILTON MFG. CO.

DON'T REMOVE THIS LEAF FROM BOOK

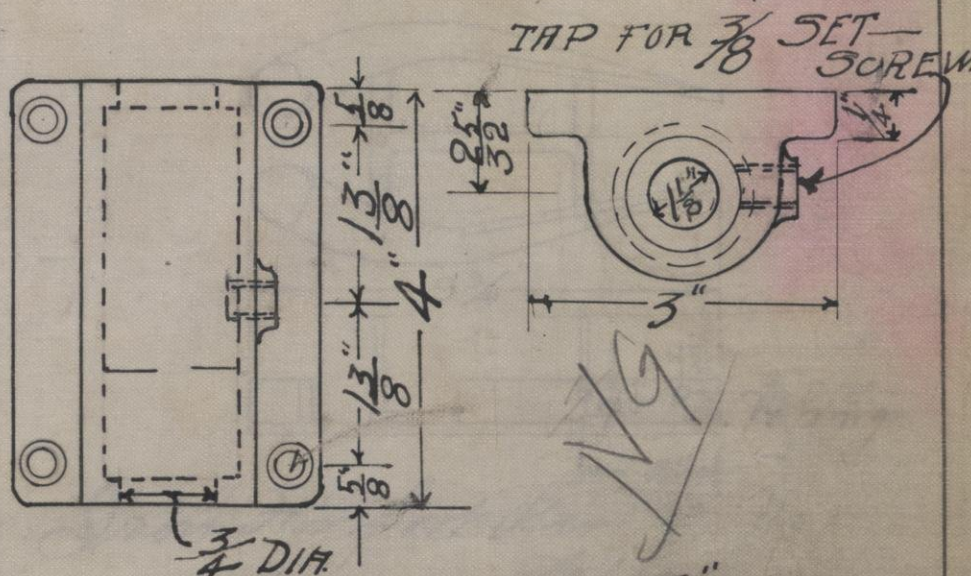

NG

SOCKET FOR 3/4" PIPE

PATTERN NO. 610.5

SEE B. P. NO. 282.C

THE HAMILTON MFG. CO.

DONT REMOVE THIS LEAF FROM BOOK

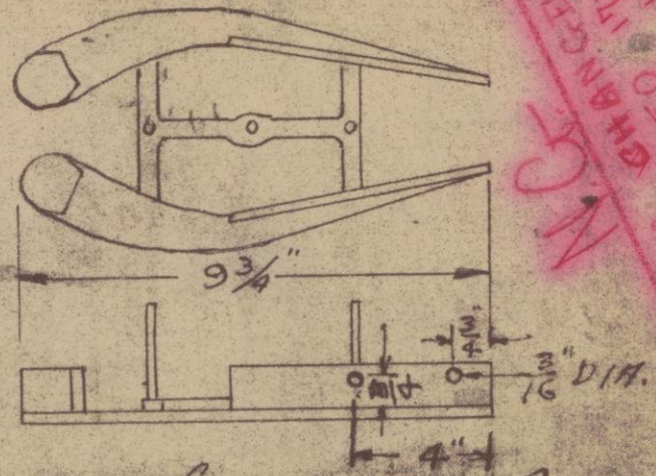

Iron For foot Rest on Fry tables

PATTERN NO. 597

SEE B. P. NO. 269

No Drawing

B.P. No. CHANGED TO 1728 1729 R.H. 1-2-53 N.C.

5 3/16 WAS 5 1/2

THE HAMILTON MFG. CO.

DONT REMOVE THIS LEAF FROM BOOK

Mitch gasted 2 castings

G

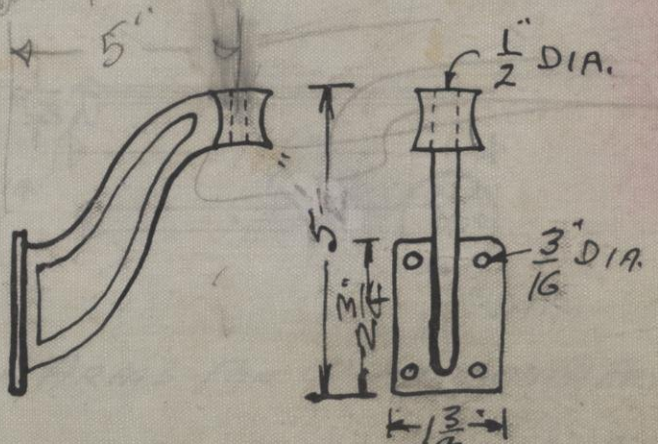

Used on Champion & Ideal

BRACKET FOR SWING ARM FOR CHAMPION & 25" C" COMBINATION

38873-A PATTERN NO. 582

SEE B. P. NO. ~~255~~

No Drawing

THE HAMILTON MFG. CO.

DONT REMOVE THIS LEAF FROM BOOK

See B.P. No. 38873 for Plate

When ordering #580 Casting order #597 Plates

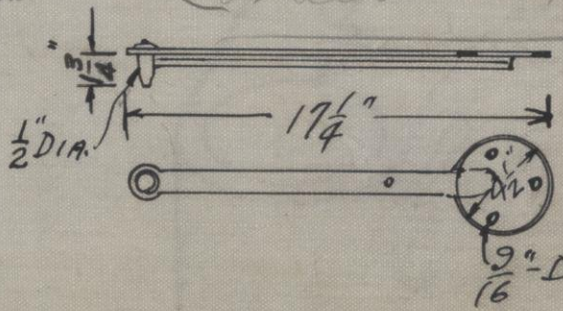

Used on Champion & Fry

SWING ARMS FOR CHAMPION & FRY TABLES

C-101672

38873-A

PATTERN NO. 580

SEE B. P. NO. 253

No Drawing

THE HAMILTON MFG. CO.

DONT REMOVE THIS LEAF FROM BOOK

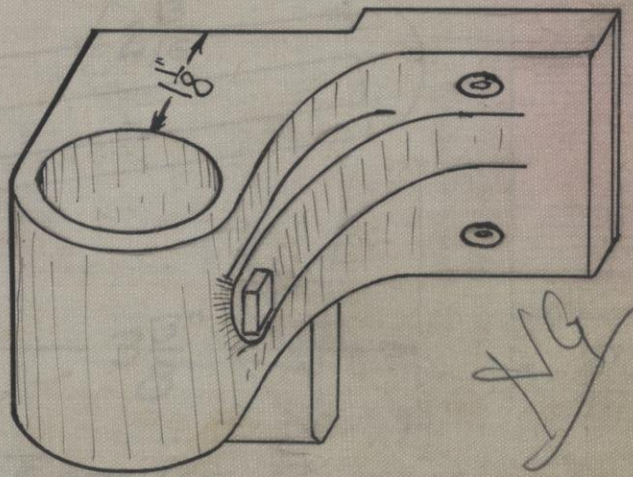

¾" Pipe Socket for Angle Iron Upright.

PATTERN NO. 577.

SEE B. P. NO. 250.

333

THE HAMILTON MFG. CO.

DONT REMOVE THIS LEAF FROM BOOK

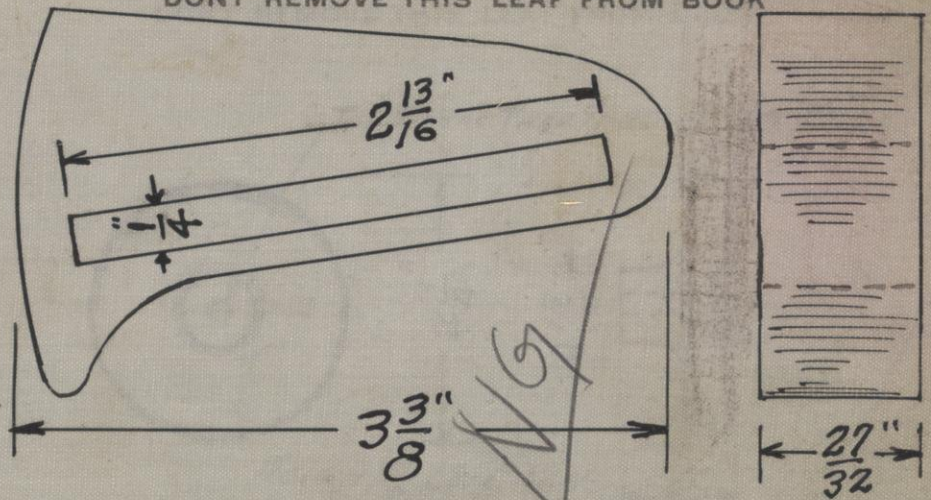

NG

RATCHET CLAMP

SCALE FULL SIZE

PATTERN NO. 573

SEE B. P. NO. 245

No Drawing

THE HAMILTON MFG. CO.

DONT REMOVE THIS LEAF FROM BOOK

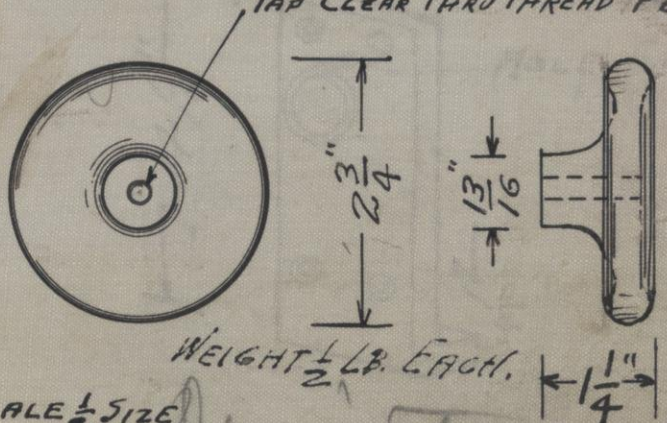

SCALE 1/2 SIZE

Discontinued

SOLID HAND WHEEL

Die 878

PATTERN NO. 571

SEE B. P. NO. 243

No Drawing

THE HAMILTON MFG. CO.

DONT REMOVE THIS LEAF FROM BOOK

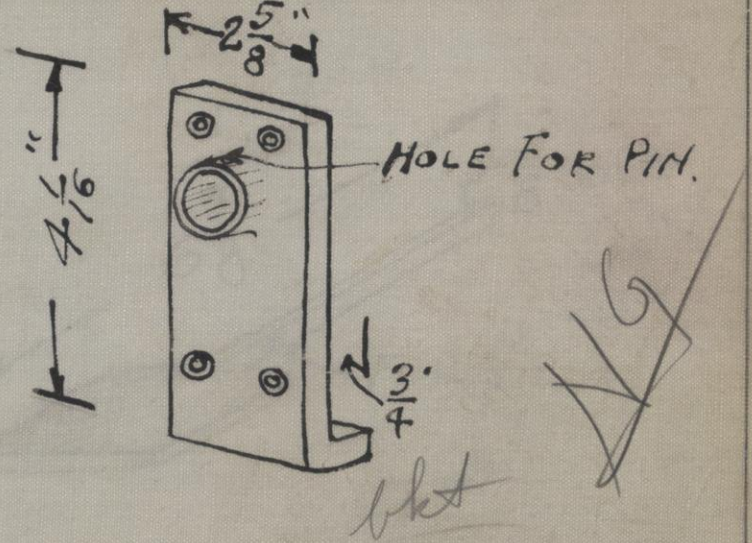

PATTERN NO. 567

SEE B. P. NO. 239

No Drawing

THE HAMILTON MFG. CO.

DONT REMOVE THIS LEAF FROM BOOK

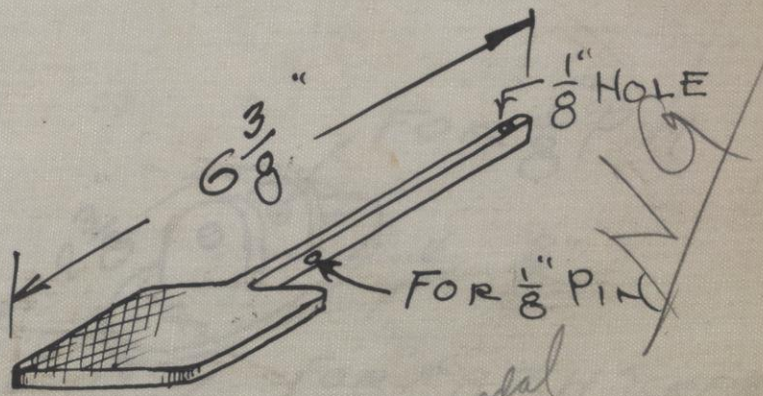

ft pedal

SEE B. P. NO. 238

PATTERN NO. 566

No Drawing

THE HAMILTON MFG. CO.

DONT REMOVE THIS LEAF FROM BOOK

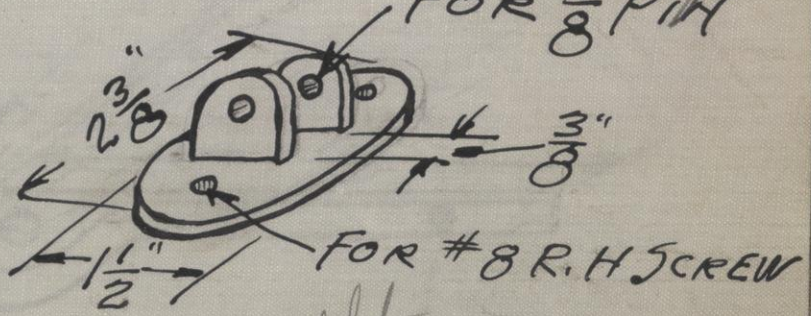

SEE B. P. NO. 237

PATTERN NO. 565

No Drawing

THE HAMILTON MFG. CO.

DONT REMOVE THIS LEAF FROM BOOK

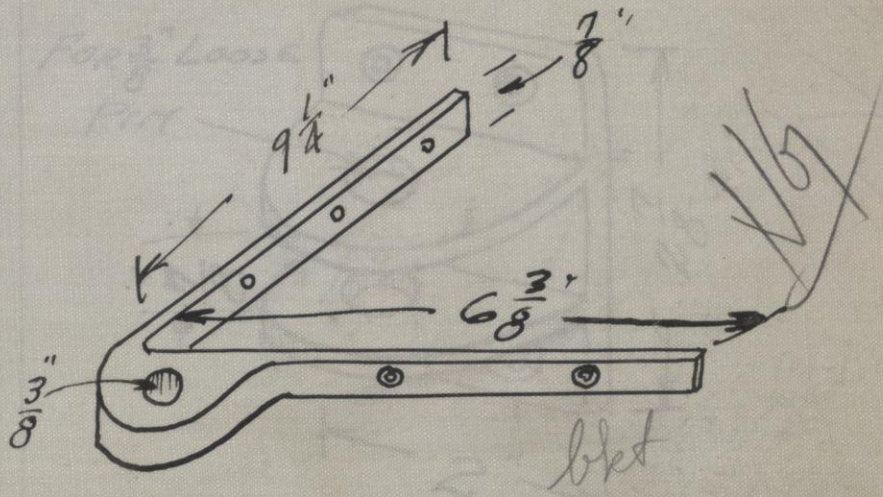

PATTERN NO. 564

SEE B. P. NO 5248-W

THE HAMILTON MFG. CO.

DONT REMOVE THIS LEAF FROM BOOK

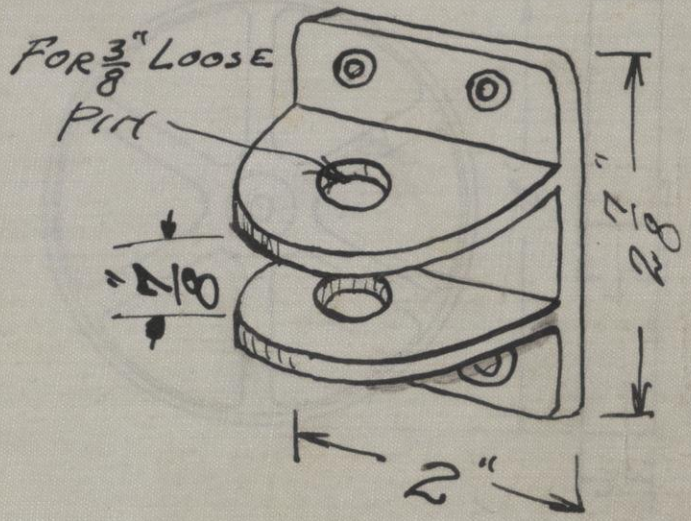

PATTERN NO. 563

SEE B. P. NO 5248-W

11

THE HAMILTON MFG. CO.

DONT REMOVE THIS LEAF FROM BOOK

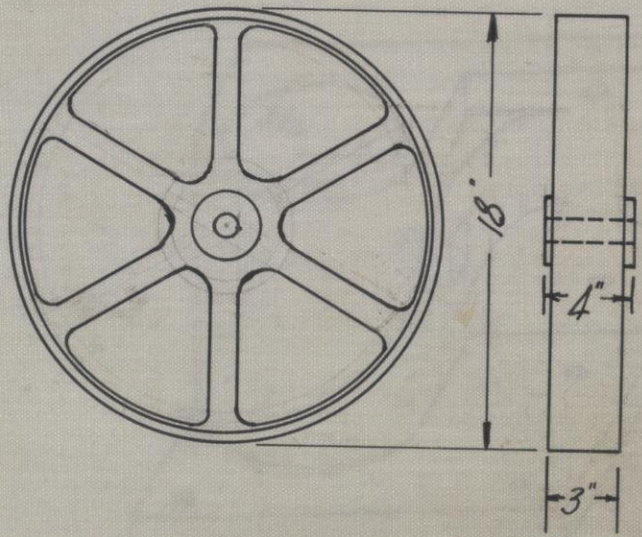

NG

Truck Wheel 18" diameter

PATTERN NO. 561

SEE B. P. NO. no blue print

THE HAMILTON MFG. CO.

DONT REMOVE THIS LEAF FROM BOOK

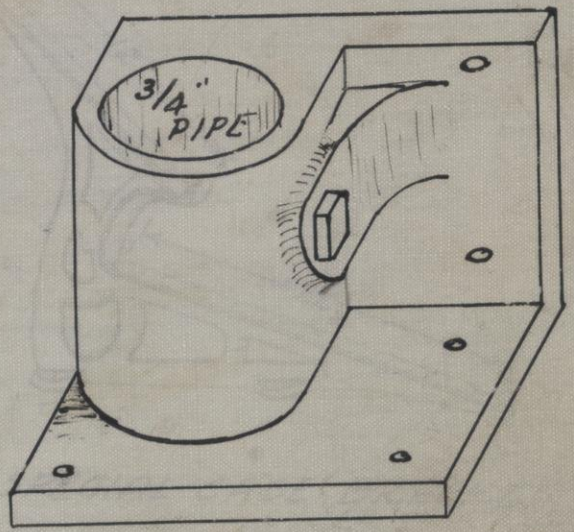

Casting for no 531 Cut Cost Work Bench.

PATTERN NO. 562

SEE B. P. NO. 234C

321

THE HAMILTON MFG. CO.

DONT REMOVE THIS LEAF FROM BOOK

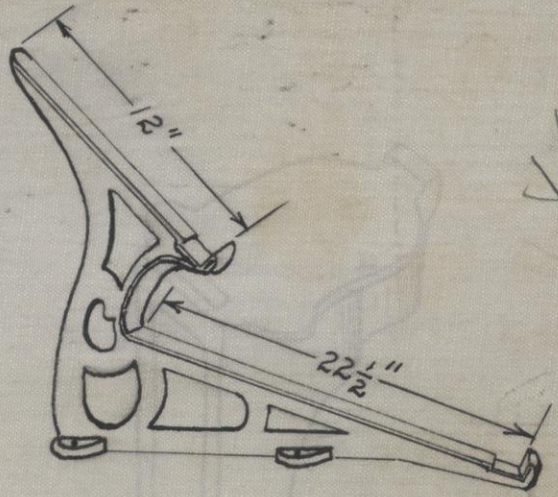

SPECIAL CASE BRACKET

NO BLUE PRINT

SEE B. P. NO.

PATTERN NO. 551

THE HAMILTON MFG. CO.

DONT REMOVE THIS LEAF FROM BOOK

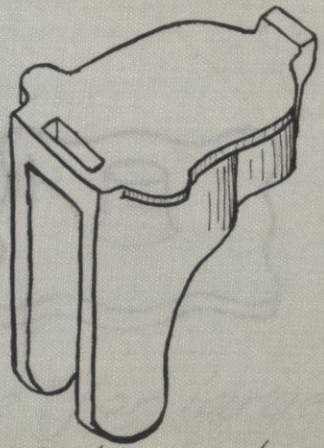

Fork for large truck caster

PATTERN NO. 560

SEE B. P. NO. no drawing

318

THE HAMILTON MFG. CO.

DONT REMOVE THIS LEAF FROM BOOK

NG

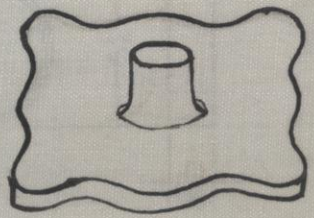

Flange for large caster.

PATTERN NO. 559.

SEE B. P. NO. no drawing 317

THE HAMILTON MFG. CO.

DONT REMOVE THIS LEAF FROM BOOK

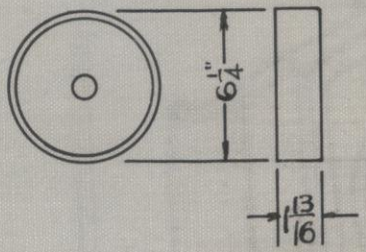

N/G

Wheel for truck 6¼" diameter

PATTERN NO. 558

SEE B. P. NO. no drawing.

316

THE HAMILTON MFG. CO.

DONT REMOVE THIS LEAF FROM BOOK

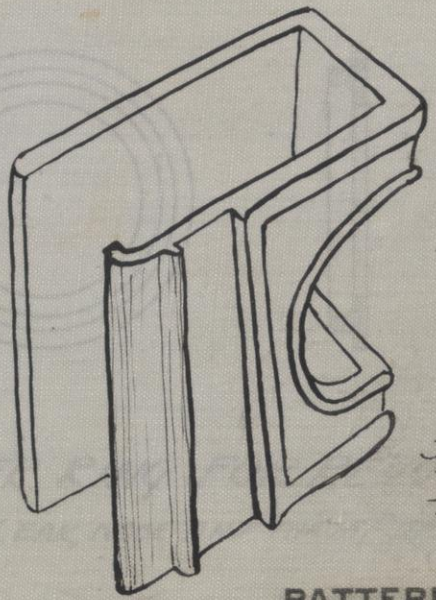

flange for spindle on truck

PATTERN NO. 557 L.S. R.S.

SEE B. P. NO. 233

THE HAMILTON MFG. CO.

DONT REMOVE THIS LEAF FROM BOOK

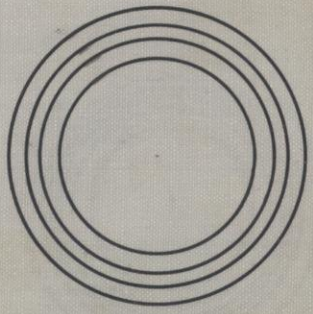

N19

UPPER RING FOR REVOLVING BASE.

FOR EYE, EAR, NOSE, AND THROAT SPECIALISTS.

PATTERN NO. 555

SEE B. P. NO. 230

3/4

No Drawing

THE HAMILTON MFG. CO.

DONT REMOVE THIS LEAF FROM BOOK

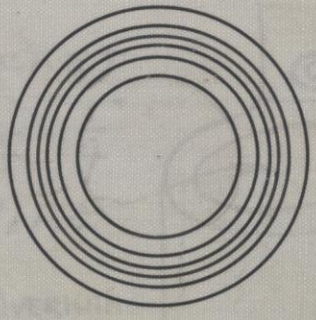



LOWER RING FOR REVOLVING BASE
FOR EYE, EAR, NOSE, AND THROAT SPECIALISTS.

PATTERN NO. 554

SEE B. P. NO. 230

No Drawing

THE HAMILTON MFG. CO.

DONT REMOVE THIS LEAF FROM BOOK

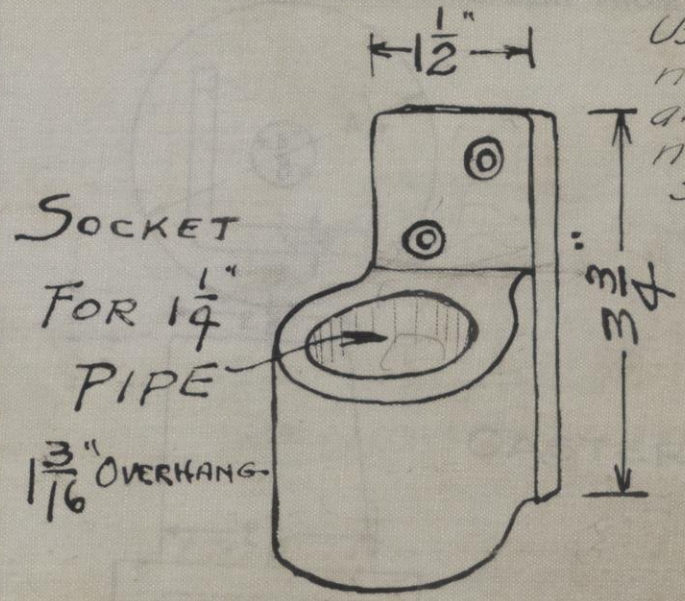

Use pattern no 623 unless absolutely necessary. See B.P. # 296

PATTERN NO. 546

SEE B. P. NO 222-C

THE HAMILTON MFG. CO.

DONT REMOVE THIS LEAF FROM BOOK

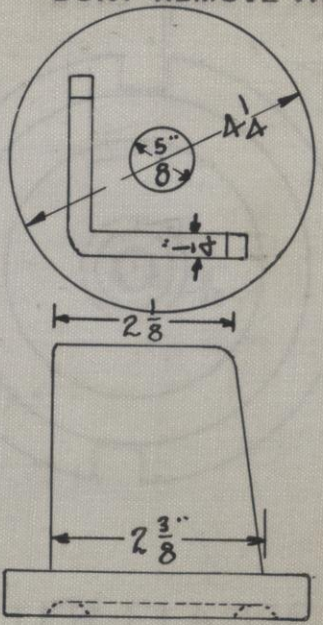

NG

CASTER FLANGE

SEE B. P. NO. 218 C

PATTERN NO. 542

3/9

THE HAMILTON MFG. CO.

DONT REMOVE THIS LEAF FROM BOOK

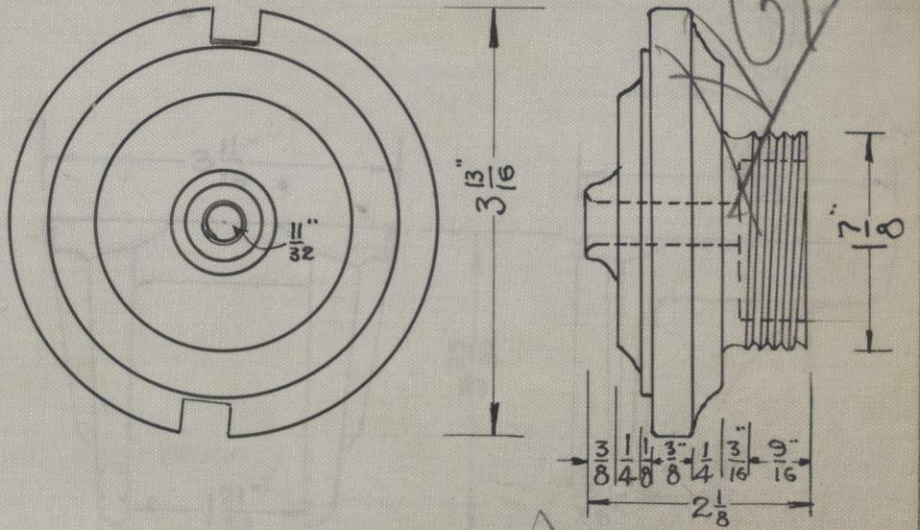

CASTER FLANGE FOR 1½" FITTING.

PATTERN NO. 540"S"

SEE B. P. NO. 216"C"

318

THE HAMILTON MFG. CO.

DONT REMOVE THIS LEAF FROM BOOK

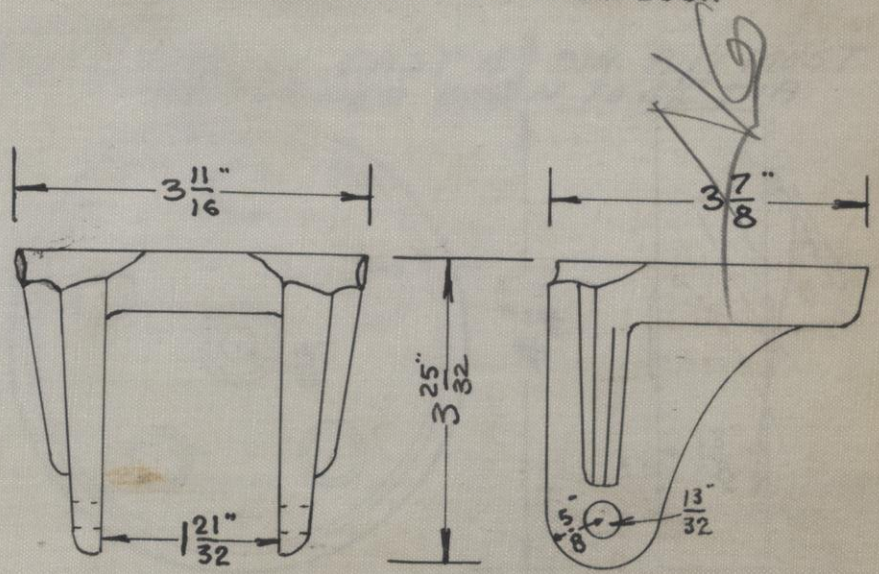

FORK FOR No 7 R.S. CASTER

SEE B. P. NO. 215"C" PATTERN NO. 539"S"

THE HAMILTON MFG. CO.

DONT REMOVE THIS LEAF FROM BOOK

NOTE - WHEEL CAST $4\frac{3}{8}$ DIA. BUT MUST BE TURNED DOWN TO $4\frac{1}{4}$" DIA

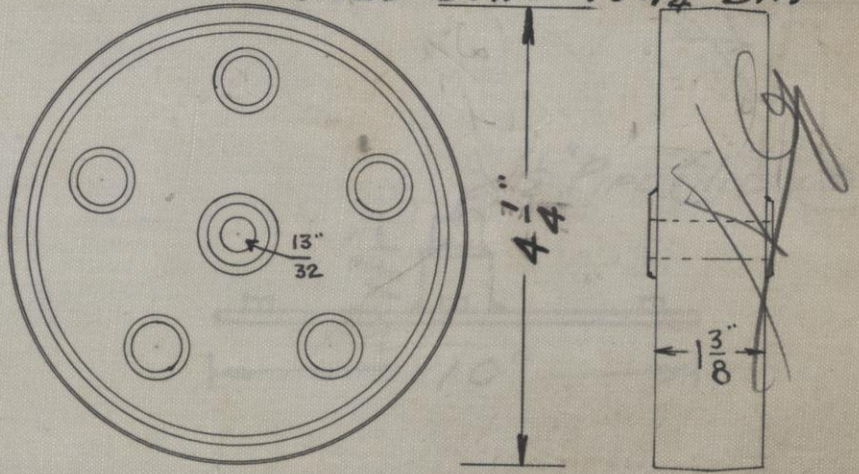

WHEEL FOR No 7 R.S. CASTERS

SEE B. P. NO. 214 "C" PATTERN NO. 538 "S"

316

THE HAMILTON MFG. CO.

DONT REMOVE THIS LEAF FROM BOOK

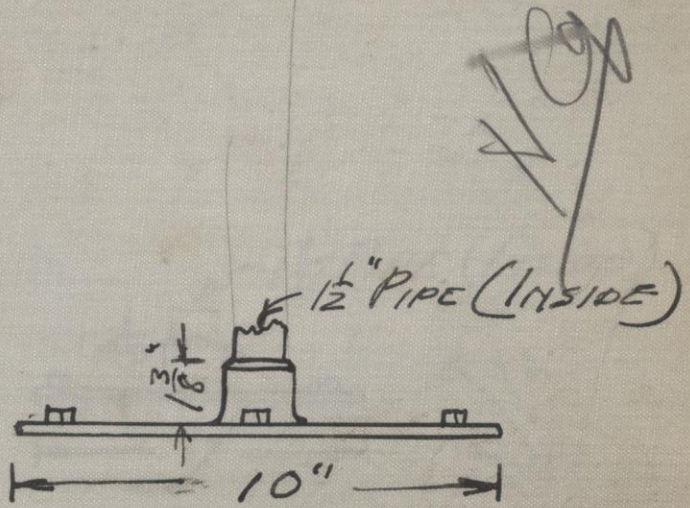

FLANGE FOR JOB PRESS CABT.

PATTERN NO. 536

SEE B. P. NO. 212

No Drawing

THE HAMILTON MFG. CO.

DONT REMOVE THIS LEAF FROM BOOK

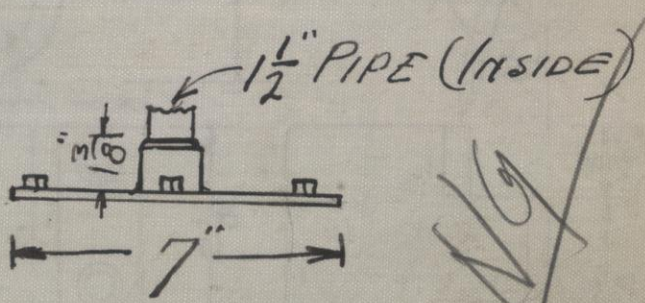

FLANGE FOR JOB PRESS CABTS

PATTERN NO. 535

SEE B. P. NO. 211

No Drawing

THE HAMILTON MFG. CO.

DONT REMOVE THIS LEAF FROM BOOK

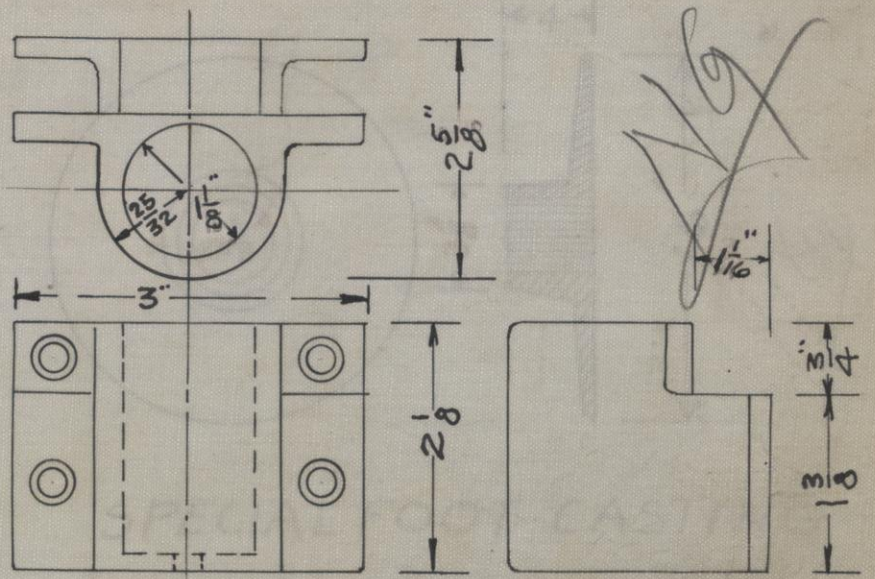

PIPE SOCKET FOR A-C-C WORK BENCK & JUST. MATERIALS CAB'T

PATTERN NO. 534

SEE B. P. NO. 210 "C"

THE HAMILTON MFG. CO.

DONT REMOVE THIS LEAF FROM BOOK

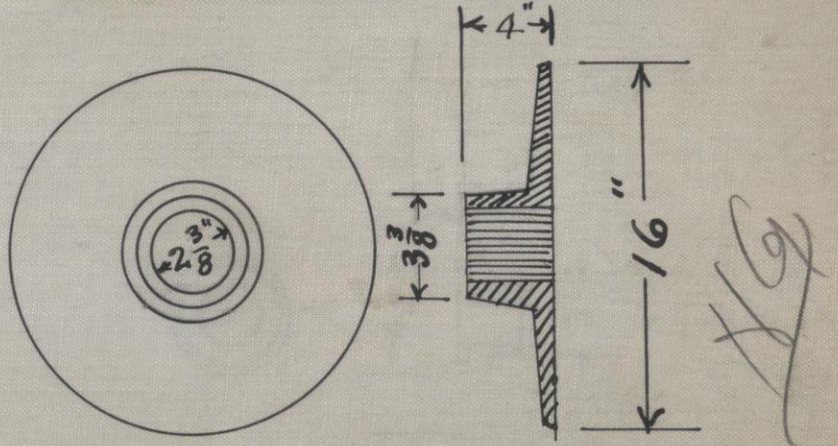

SPECIAL FOOT CASTING

PATTERN NO. 533

SEE B. P. NO. 209-C

THE HAMILTON MFG. CO.

DONT REMOVE THIS LEAF FROM BOOK

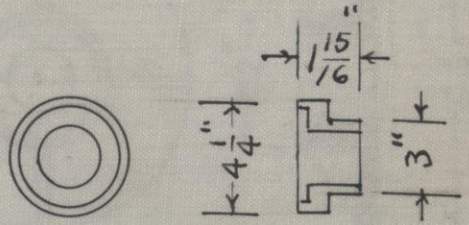

SPECIAL CASTING

PATTERN NO. 532

SEE B. P. NO. 208-C

THE HAMILTON MFG. CO.

DONT REMOVE THIS LEAF FROM BOOK

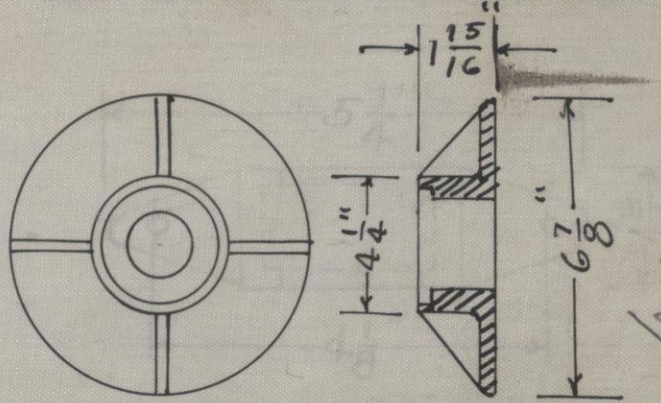

SPECIAL CASTING

PATTERN NO. 531

SEE B. P. NO. 208-C

THE HAMILTON MFG. CO.

DONT REMOVE THIS LEAF FROM BOOK

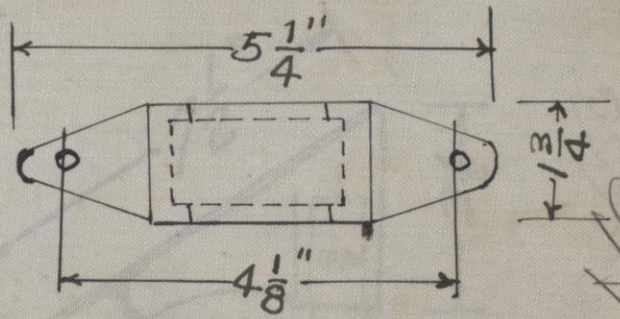

SPECIAL SOCKET FOR 1 1/4" PIPE

PATTERN NO. 529 S

SEE B. P. NO. 206-C

THE HAMILTON MFG. CO.

DONT REMOVE THIS LEAF FROM BOOK

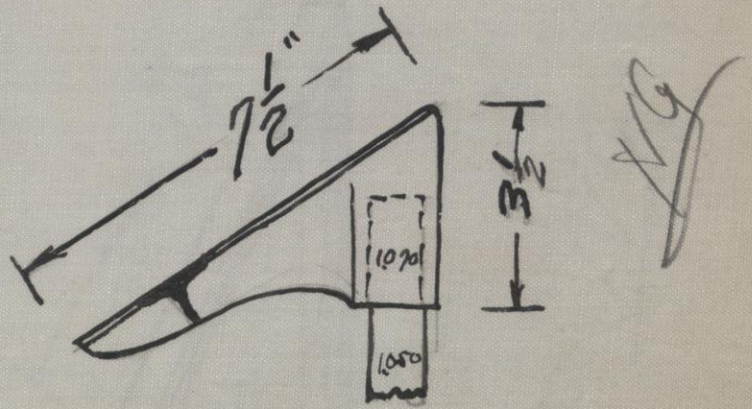

PATTERN NO. 528

SEE B. P. NO. 205-C

THE HAMILTON MFG. CO.

DONT REMOVE THIS LEAF FROM BOOK

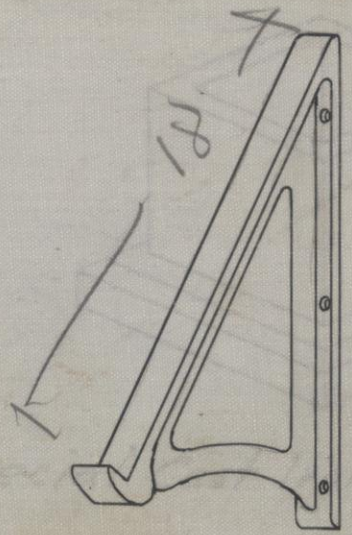

SPECIAL DUMP BRACKET

PATTERN NO. 527

SEE B. P. NO. 204-C

THE HAMILTON MFG. CO.

DONT REMOVE THIS LEAF FROM BOOK

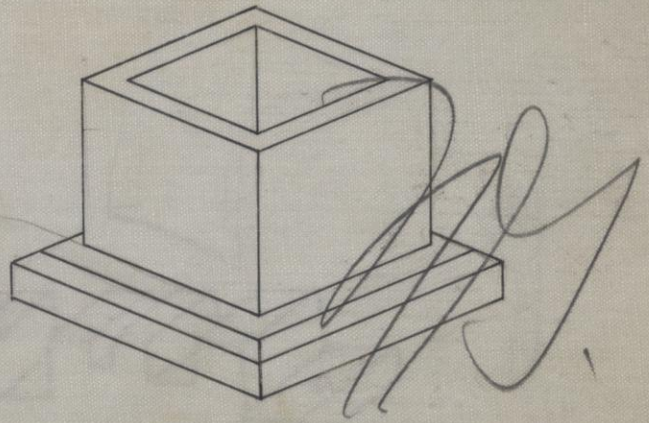

Special Cast Iron Shoe

PATTERN NO. 526

SEE B. P. NO. 203-C

THE HAMILTON MFG. CO.

DONT REMOVE THIS LEAF FROM BOOK

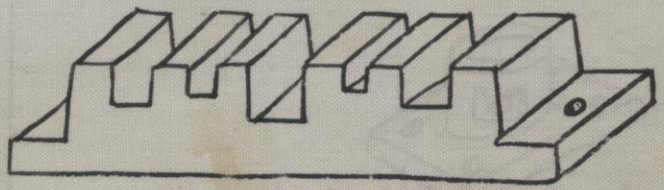

Clamp to hold Pipes- Plumber's Bench

PATTERN NO. 521-S

SEE B. P. NO. 197 C

THE HAMILTON MFG. CO.

DONT REMOVE THIS LEAF FROM BOOK

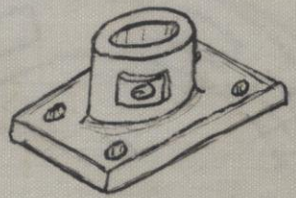

Socket FOR $\frac{3}{4}$" PIPE

PATTERN NO. 520 S

SEE B. P. NO. 196 "C"

THE HAMILTON MFG. CO.

DONT REMOVE THIS LEAF FROM BOOK

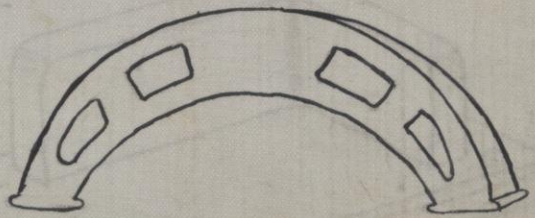

Bracket For Plumber's Bench.

PATTERN NO. 5195

SEE B. P. NO. 195 C

THE HAMILTON MFG. CO.

DONT REMOVE THIS LEAF FROM BOOK

NG

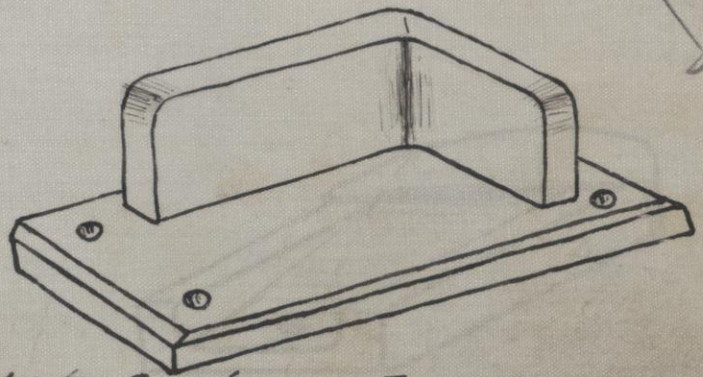

Shoe Casting For Miller Saw Guard

SEE B. P. NO. 194 "C" PATTERN NO. 518 S

THE HAMILTON MFG. CO.

DONT REMOVE THIS LEAF FROM BOOK

NG

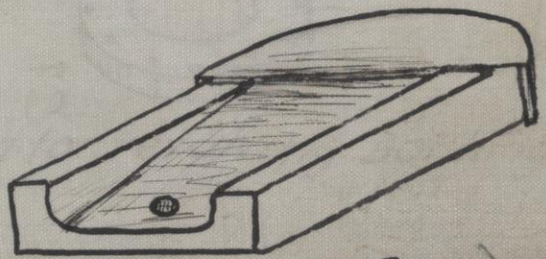

Shoe casting FOR DRAWING BDS.

PATTERN NO. 517-W

SEE B. P. NO. 193 "C"

THE HAMILTON MFG. CO.

DONT REMOVE THIS LEAF FROM BOOK

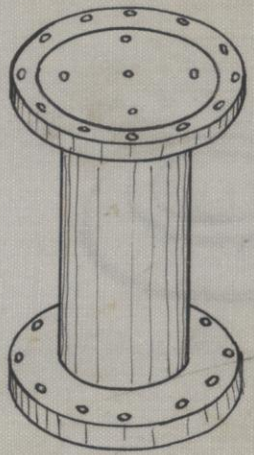

Casting for revolving sorting table

SEE B. P. NO. 249

PATTERN NO. 514

THE HAMILTON MFG. CO.

DONT REMOVE THIS LEAF FROM BOOK

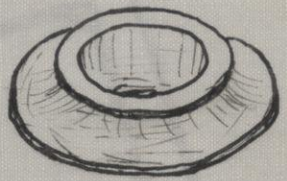

Base For Infirmary Cabinet.

PATTERN NO. 513 W

SEE B. P. NO. 1916 "C"

THE HAMILTON MFG. CO.

DONT REMOVE THIS LEAF FROM BOOK

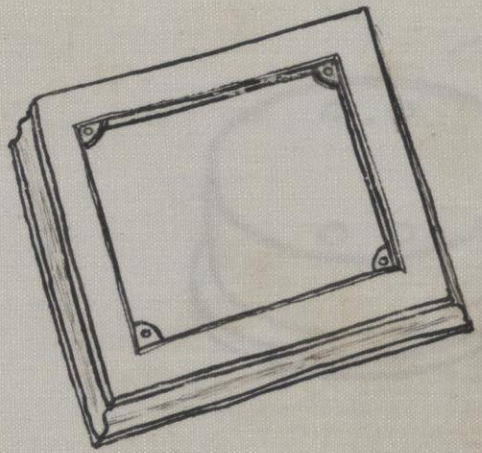

top casting for Electric cabinet

PATTERN NO. 512

SEE B. P. NO. 001859

THE HAMILTON MFG. CO.

DONT REMOVE THIS LEAF FROM BOOK

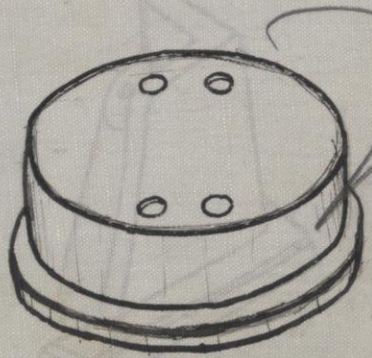

FLANGE FOR ELECTRICABINET

SEE B. P. NO. 190 C PATTERN NO. 511

THE HAMILTON MFG. CO.

DONT REMOVE THIS LEAF FROM BOOK

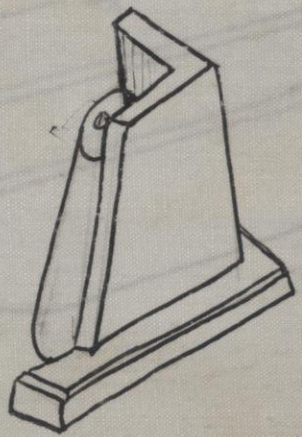

Shoe For 1½" x 2" Angle Leg

SEE B. P. NO. 189 "C"

PATTERN NO. 510 R.S
510 L.S

THE HAMILTON MFG. CO.

DONT REMOVE THIS LEAF FROM BOOK

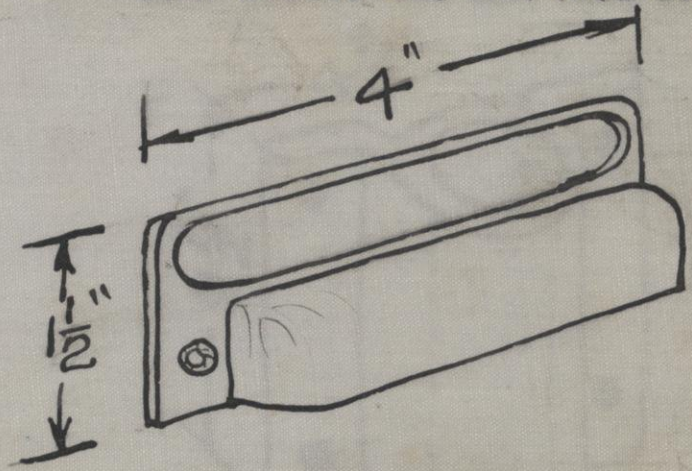

PATTERN NO. 509

SEE B. P. NO. 188-C

THE HAMILTON MFG. CO.

DONT REMOVE THIS LEAF FROM BOOK

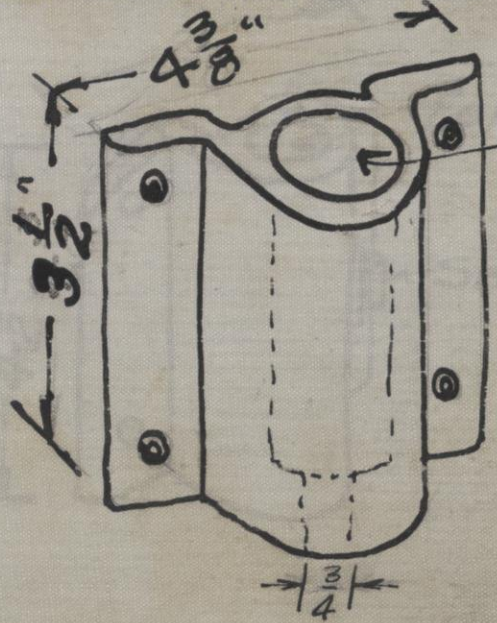

PATTERN NO. 508

SEE B. P. NO. 187-C

THE HAMILTON MFG. CO.

DONT REMOVE THIS LEAF FROM BOOK

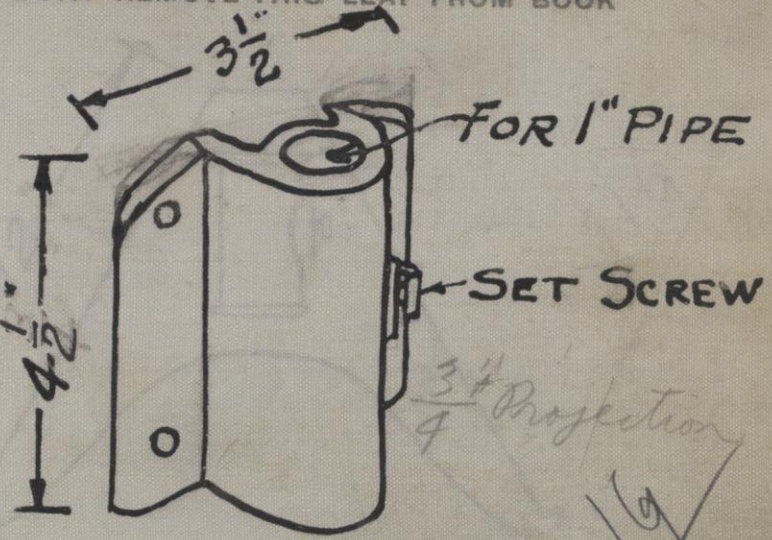

PATTERN NO. 507

SEE B. P. NO. 186-C

THE HAMILTON MFG. CO.

DONT REMOVE THIS LEAF FROM BOOK

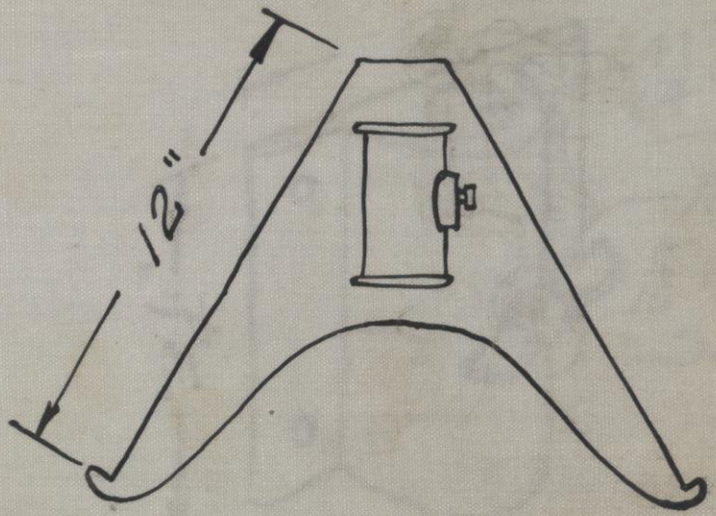

N/G

PATTERN NO. 506

SEE B. P. NO. 185-C

No Drawing

THE HAMILTON MFG. CO.

DONT REMOVE THIS LEAF FROM BOOK

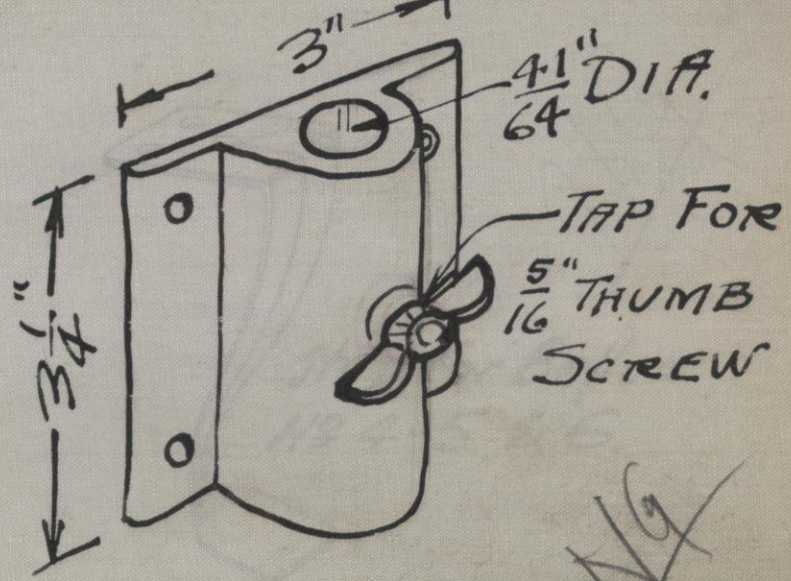

PATTERN NO. 505

SEE B. P. NO. 184-C-

THE HAMILTON MFG. CO.

DONT REMOVE THIS LEAF FROM BOOK

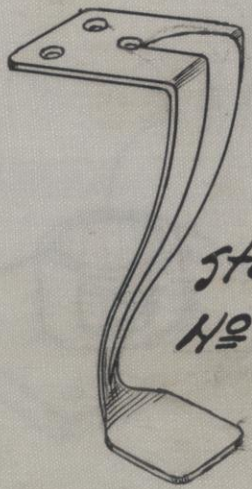

NG

Step for Bellow
No 4-5 & 6.

PATTERN NO. 504

SEE B. P. NO. 183-C.

THE HAMILTON MFG. CO.

DONT REMOVE THIS LEAF FROM BOOK

1" Pipe.

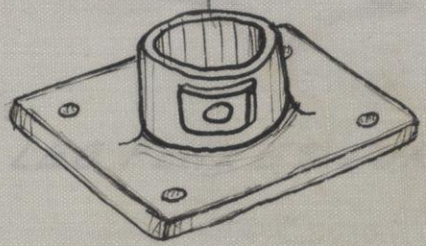

Foot Rail Flange For DRW. TABLES

PATTERN NO. 516W

SEE B. P. NO. 192 "C"

THE HAMILTON MFG. CO.

DONT REMOVE THIS LEAF FROM BOOK

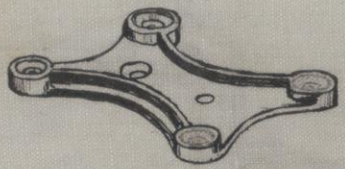

LEG PLATES FOR BELLOWS

Stove

SEE B. P. NO. 182-C. PATTERN NO. 503.

THE HAMILTON MFG. CO.

DONT REMOVE THIS LEAF FROM BOOK

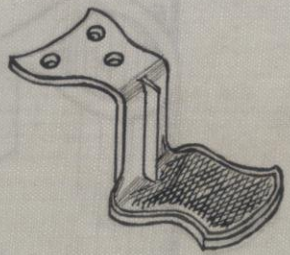

FOOT TREADLE FOR BELLOWS

SEE B. P. NO. 181-C

PATTERN NO. 502

THE HAMILTON MFG. CO.

DONT REMOVE THIS LEAF FROM BOOK

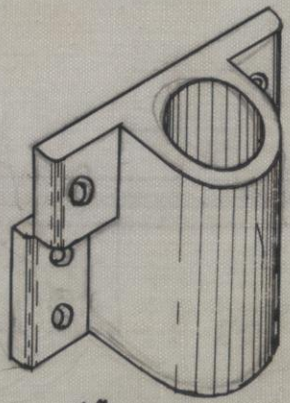

Socket for 1¼" Pipe for ½" overhang

SEE B. P. NO. 180-C PATTERN NO. 501

THE HAMILTON MFG. CO.

DONT REMOVE THIS LEAF FROM BOOK

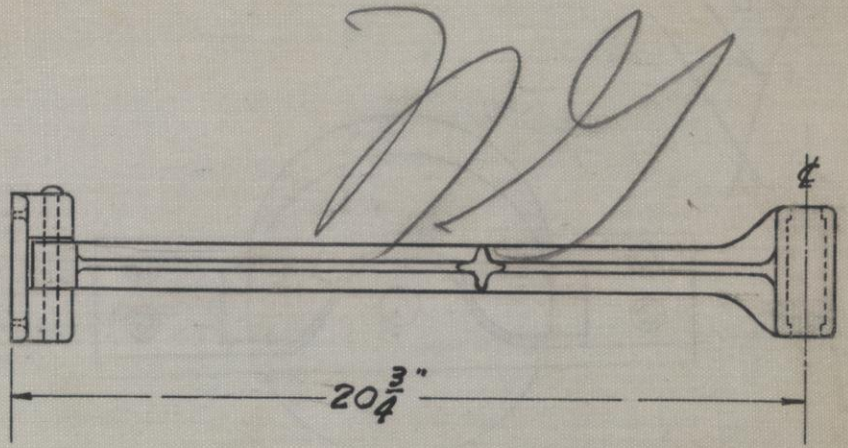

SWINGING ARM FOR RETIRING CABINET

PATTERN NO. 499.

SEE B. P. NO. 1047 A.

THE HAMILTON MFG. CO.

DONT REMOVE THIS LEAF FROM BOOK

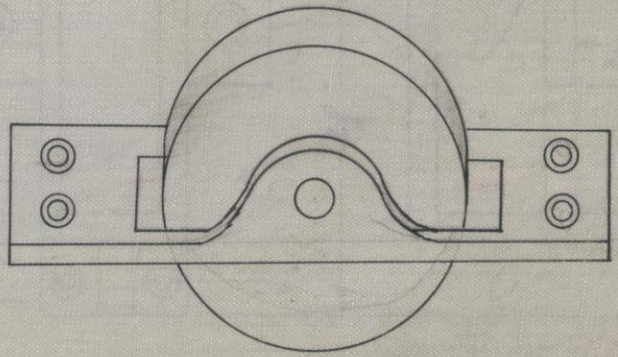

CASTER FOR FRONT OF OLD STYLE MAGAZINE DRW.
WHEEL 2¾" DIA. 1" FACE.

PATTERN NO. 498

SEE B. P. NO. 178-C

THE HAMILTON MFG. CO.

DONT REMOVE THIS LEAF FROM BOOK

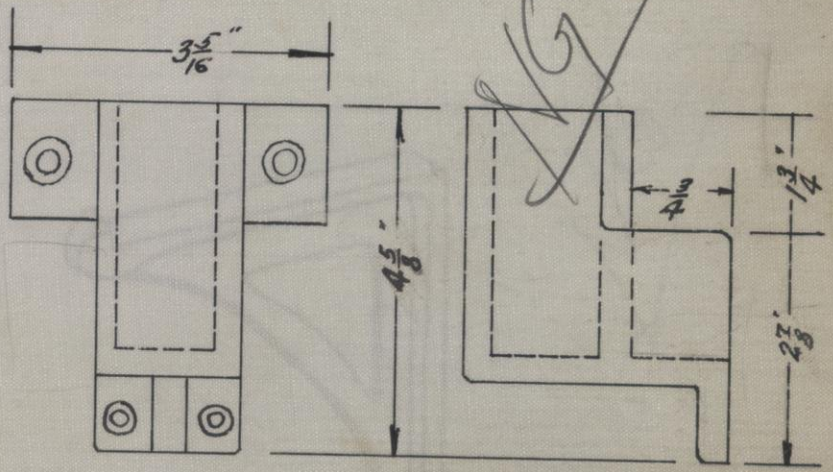

1" PIPE SOCKET FOR MONOTYPE MACHINISTS CABINET AND WORK BENCH.

PATTERN NO. 494

SEE B. P. NO. 176-C

THE HAMILTON MFG. CO.

DONT REMOVE THIS LEAF FROM BOOK

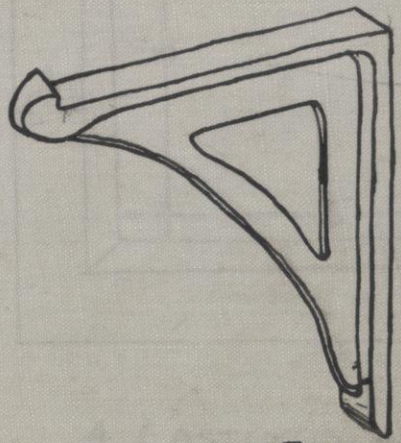

NG

CAST IRON BRACKET.

PATTERN NO. 491 S

SEE B. P. NO. 172 C

THE HAMILTON MFG. CO.

DONT REMOVE THIS LEAF FROM BOOK

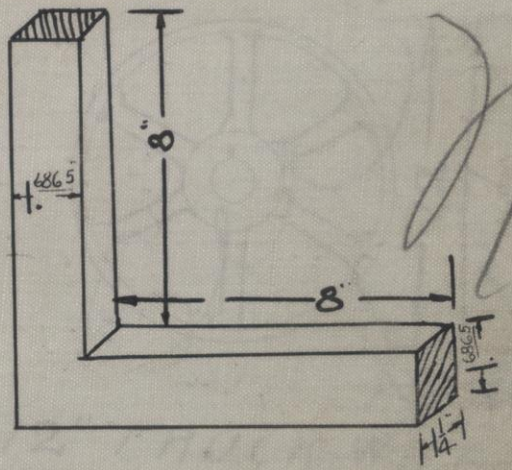

4 CASTINGS WANTED

PATTERN NO. 482

SEE B. P. NO. 7297 - DRW. 15 -

9

THE HAMILTON MFG. CO.

DONT REMOVE THIS LEAF FROM BOOK

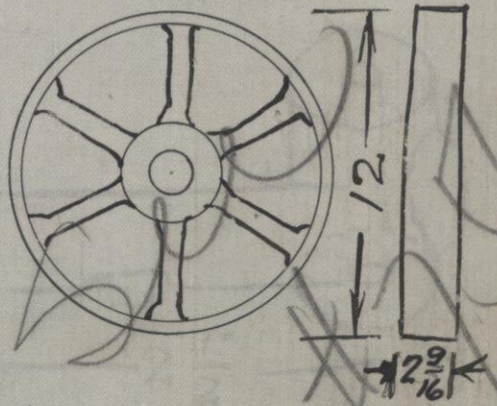

12" TRUCK WHEEL

PATTERN NO. 486

SEE B. P. NO. 163-C

THE HAMILTON MFG. CO.

DONT REMOVE THIS LEAF FROM BOOK

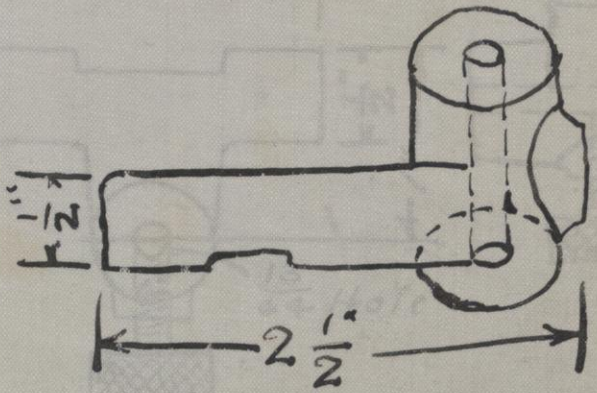

Bracket X

PATTERN NO. 485-S

SEE B. P. NO. 162

No Drawing

6

THE HAMILTON MFG. CO.

DONT REMOVE THIS LEAF FROM BOOK

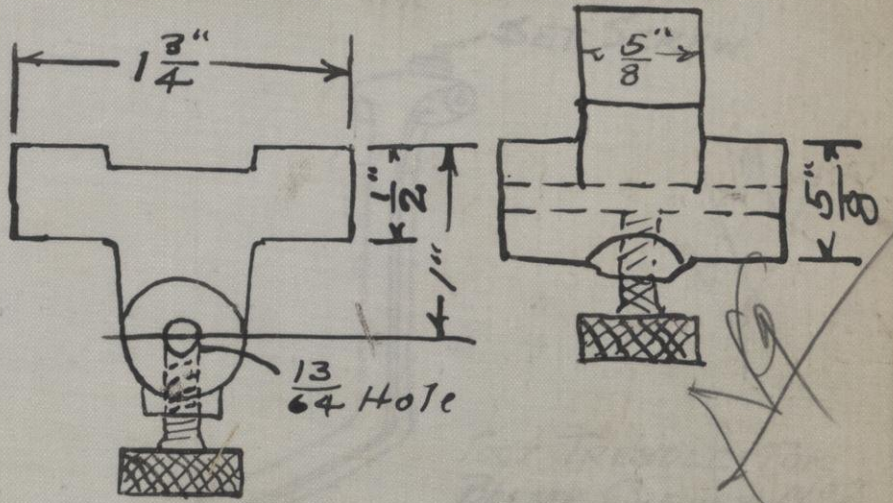

Bracket B

PATTERN NO. 484-S

SEE B. P. NO. 161

No Drawing

THE HAMILTON MFG. CO.

DONT REMOVE THIS LEAF FROM BOOK



FOOT TREADLE FOR BARBER CABINET No 2

PATTERN NO. 483

SEE B. P. NO. 160

THE HAMILTON MFG. CO.

DON'T REMOVE THIS LEAF FROM BOOK

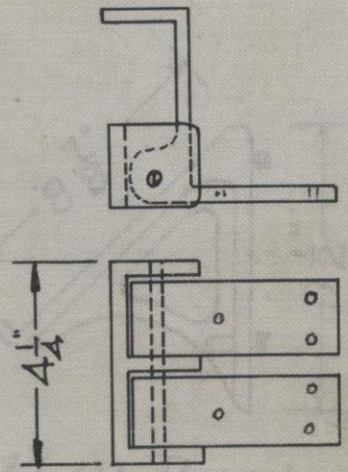

SWINGING TRAY HINGE.

PATTERN NO. 482-S

SEE B. P. NO. 159-C

THE HAMILTON MFG. CO.

DONT REMOVE THIS LEAF FROM BOOK

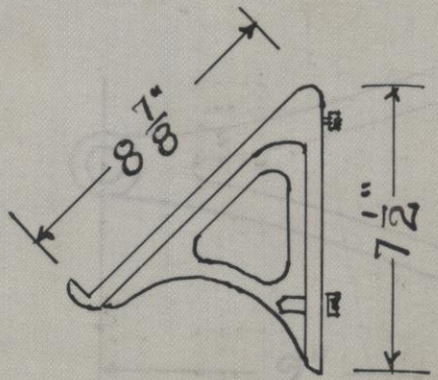

HG

Galley Dump Bracket

SEE B. P. NO. 158-C PATTERN NO. 481-S

THE HAMILTON MFG. CO.

DONT REMOVE THIS LEAF FROM BOOK

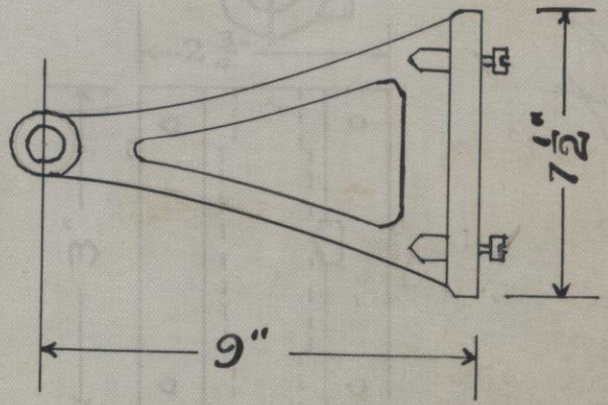

NG

Foot Rail Bracket

PATTERN NO. 480-S

SEE B. P. NO. 157-C

THE HAMILTON MFG. CO.

DONT REMOVE THIS LEAF FROM BOOK

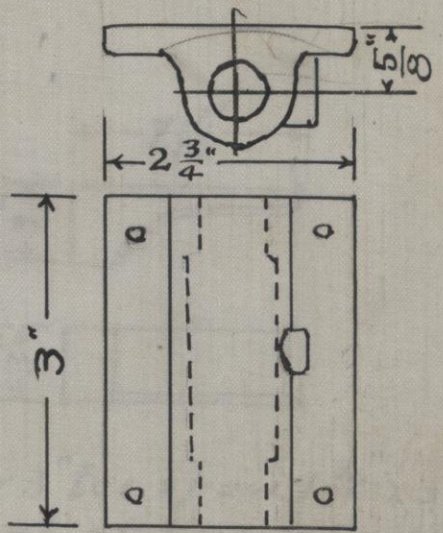

Socket for ½" Conduit

PATTERN NO. 479-S

SEE B. P. NO. 156-C

9

THE HAMILTON MFG. CO.

DONT REMOVE THIS LEAF FROM BOOK

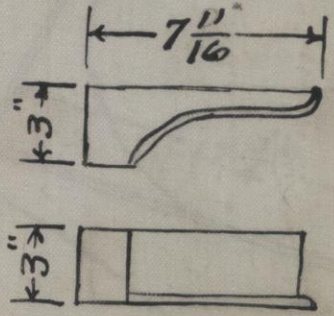

N/G

Fillet for 3" to c space 1 3/4" x 3 Angle
For front of frame only

SEE B. P. NO 155-C

PATTERN NO. 478 L.S.
478-R-S

THE HAMILTON MFG. CO.

DONT REMOVE THIS LEAF FROM BOOK

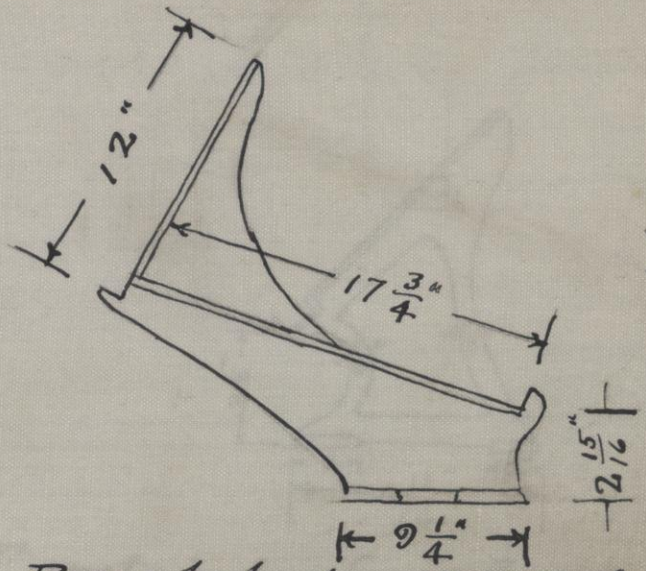

Brackets for 473 Cabinets

PATTERN NO. 477 L.S.
477 R.S.

SEE B. P. NO. 154-C

THE HAMILTON MFG. CO.

DONT REMOVE THIS LEAF FROM BOOK

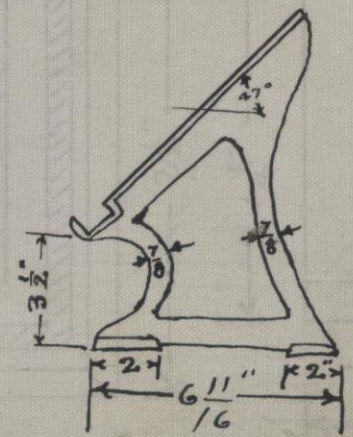

NG

Typotabular Case Brackets

SEE B. P. NO. 152-C.

PATTERN NO. 475 S

THE HAMILTON MFG. CO.

DONT REMOVE THIS LEAF FROM BOOK

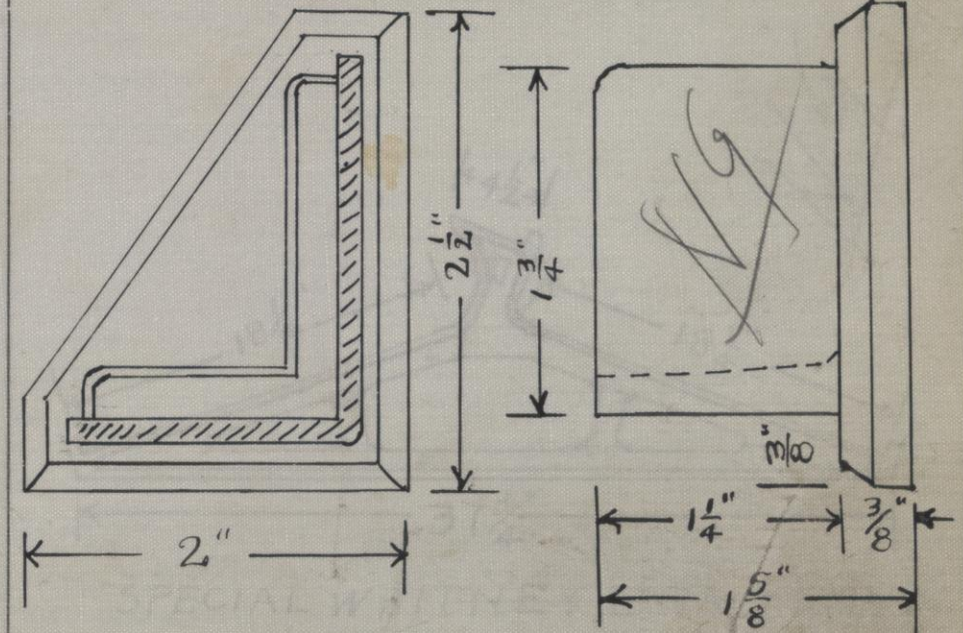

PATTERN NO. 474-RS
474-LS

SEE B. P. NO. 150-C

THE HAMILTON MFG. CO.

DONT REMOVE THIS LEAF FROM BOOK

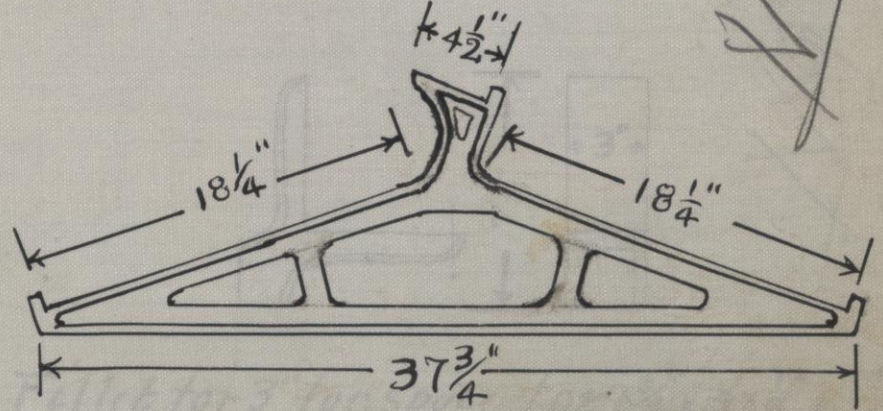

SPECIAL WHITNEY BRACKET

PATTERN NO. 473-S

SEE B. P. NO. 149 C.

THE HAMILTON MFG. CO.

DONT REMOVE THIS LEAF FROM BOOK

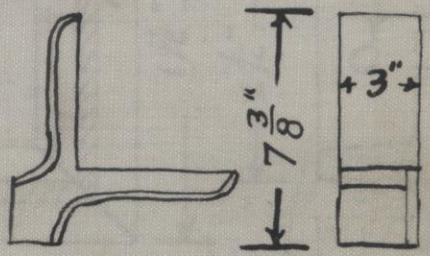

Fillet for 3" toe space for 1¾ x 3 x ⅛" L

PATTERN NO. 472 L.S.
472 H.S

SEE B. P. NO. 148-C

254

THE HAMILTON MFG. CO.

DONT REMOVE THIS LEAF FROM BOOK

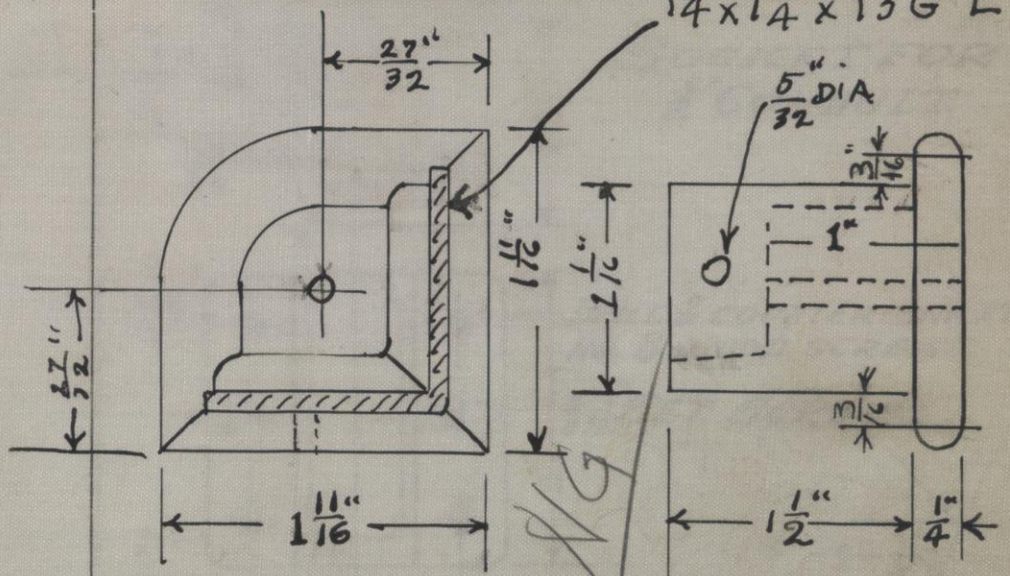

Shoe for 1¼ x 1¼ x 13 g. angle upright.

PATTERN NO 471-S.

SEE B. P. NO 147-C.

THE HAMILTON MFG. CO.

DONT REMOVE THIS LEAF FROM BOOK

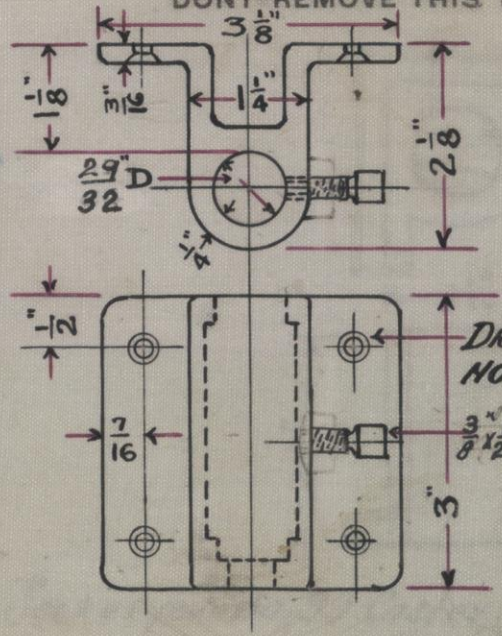

SOCKET FOR 1/2" CONDUIT.

DRILL & COUNTERSINK FOR NO. 8 WOOD SCREWS.

PATTERN NO. 470

SEE B. P. NO. 288

R.S. 1-29-15.

THE HAMILTON MFG. CO.

DONT REMOVE THIS LEAF FROM BOOK

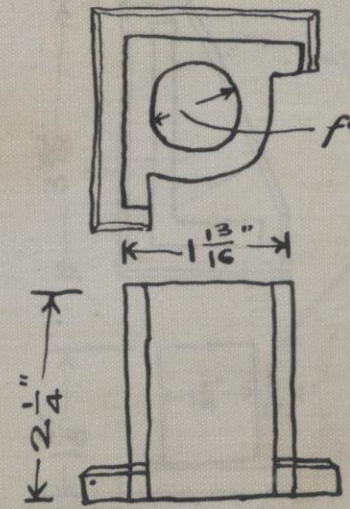

Socket for no. 99 Caster for 2 x 2 x ⅜ Angle.

PATTERN NO. 469-S

SEE B. P. NO. 146-C

THE HAMILTON MFG. CO.

DONT REMOVE THIS LEAF FROM BOOK

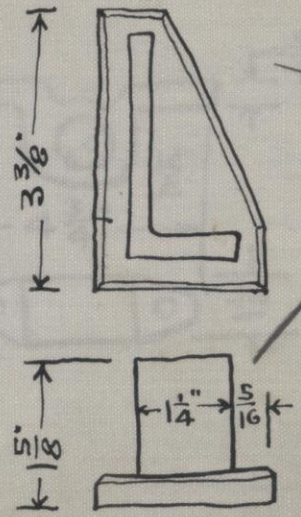

Shoe for 1½" x 3" x 11 gauge angle.

PATTERN NO. 468 L.S
468 R.S.

SEE B. P. NO. 145-C

255

THE HAMILTON MFG. CO.

DONT REMOVE THIS LEAF FROM BOOK

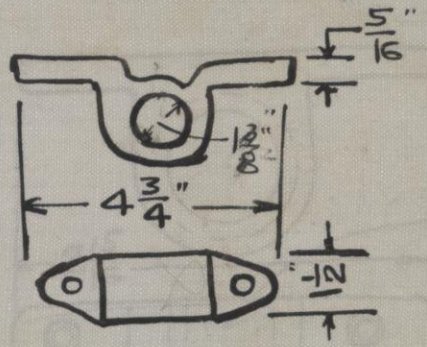

Socket for 1" Pipe for 9/16" Projection.

PATTERN NO. 467

SEE B. P. NO. 144-C

THE HAMILTON MFG. CO.

DONT REMOVE THIS LEAF FROM BOOK

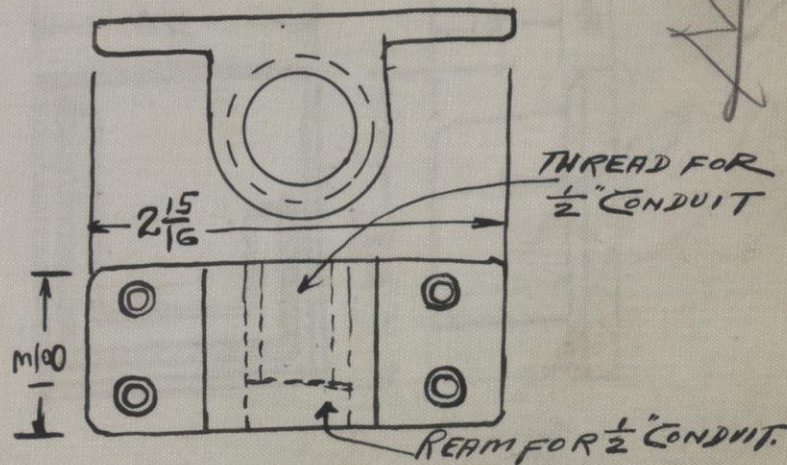

Socket TO HOLD Overhead Lights ON Wood Cabts

PATTERN NO. 465

SEE B. P. NO. 142-C.

THE HAMILTON MFG. CO.

DONT REMOVE THIS LEAF FROM BOOK

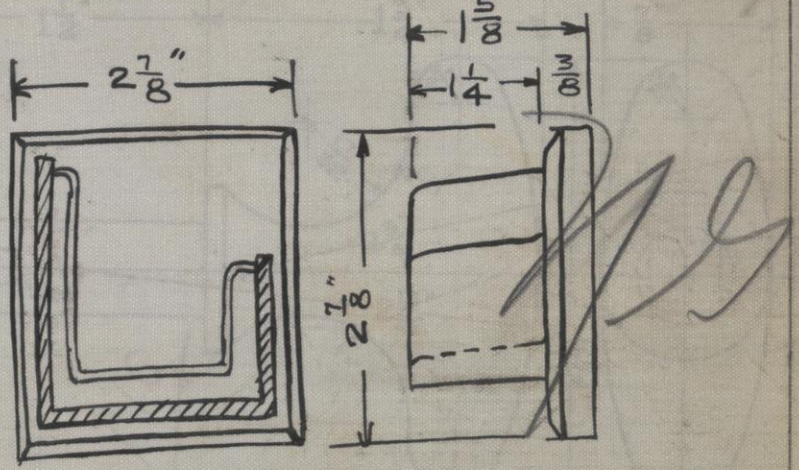

Shoe for 2½x2½x½x11G - Channel.

SEE B. P. NO. 141C

PATTERN NO. 464 L.S

" " 464 R.S.

252

THE HAMILTON MFG. CO.

DONT REMOVE THIS LEAF FROM BOOK

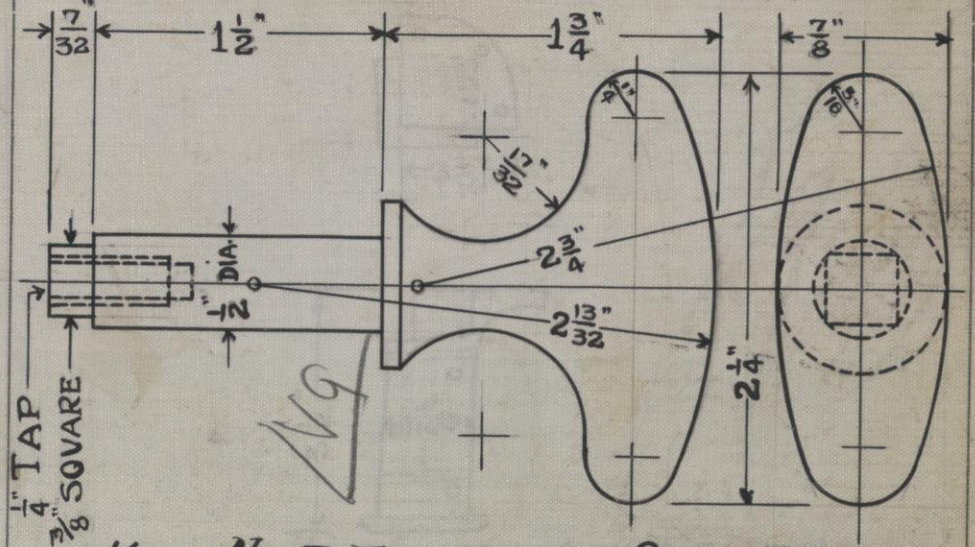

KNOB NO. 3. FOR DENTAL SAFE DOOR

PATTERN NO. 463-S

SEE B. P. NO. 289-C

THE HAMILTON MFG. CO.

DONT REMOVE THIS LEAF FROM BOOK

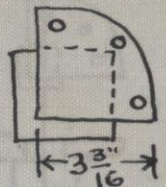

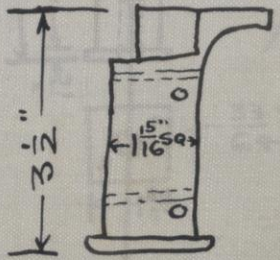

Cast Iron Leg for Comb. Safe & Operating Cabinet.

PATTERN NO. 462-S

SEE B. P. NO. 140-C

THE HAMILTON MFG. CO.

DONT REMOVE THIS LEAF FROM BOOK

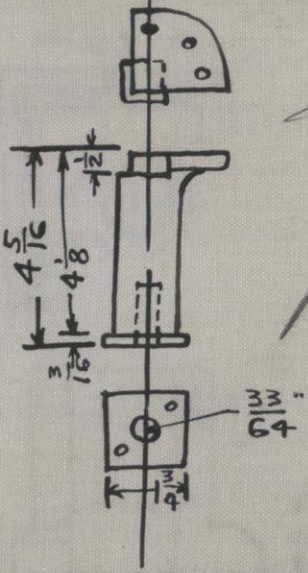

Leg for Dental Safe.

PATTERN NO. 461-S

SEE B. P. NO. 139-C.

THE HAMILTON MFG. CO.

DONT REMOVE THIS LEAF FROM BOOK

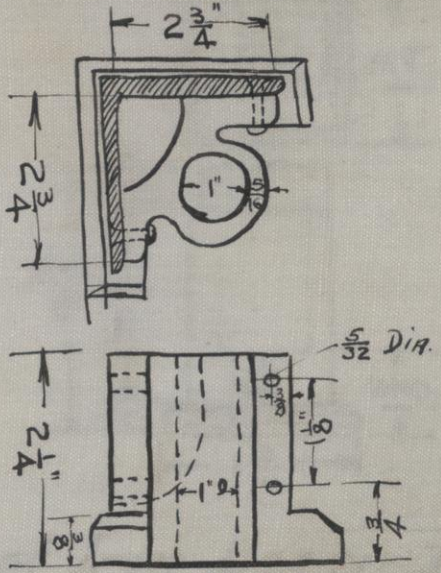

SOCKET FOR No 99 CASTER 1" STEM

PATTERN NO. 458

SEE B. P. NO. 136-C

THE HAMILTON MFG. CO.

DONT REMOVE THIS LEAF FROM BOOK

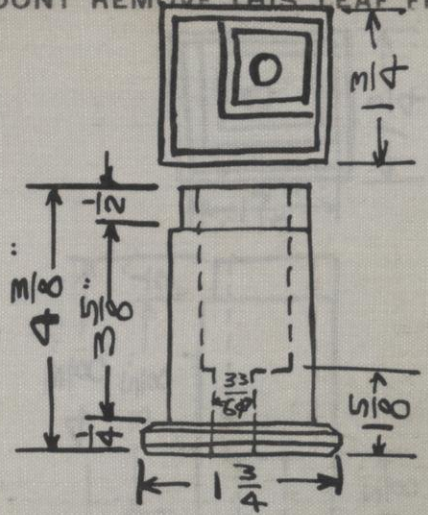

Cast Iron Leg for Dental Safe

PATTERN NO. 457. S.

SEE B. P. NO. 135-C

THE HAMILTON MFG. CO.

DONT REMOVE THIS LEAF FROM BOOK

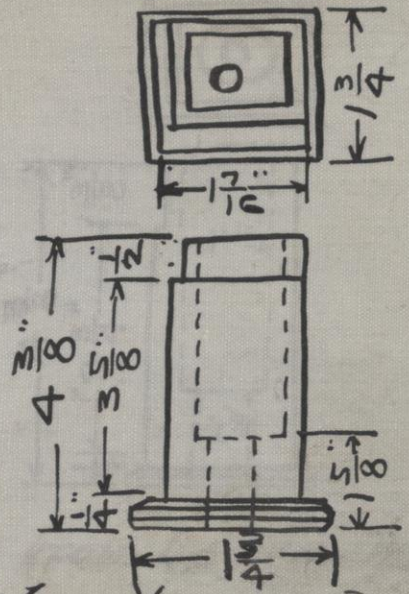

Cast Iron Leg for Dental Safe

PATTERN NO. 456-LS

SEE B. P. NO. 134-C " " 456-R.S.

THE HAMILTON MFG. CO.

DONT REMOVE THIS LEAF FROM BOOK

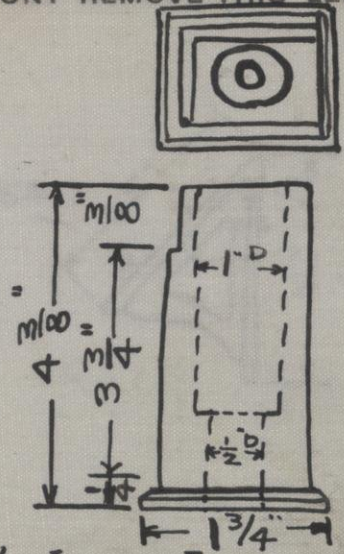

Cast Iron Leg for Dental Safe.

PATTERN NO. 455

SEE B. P. NO. 133-C.

No Drawing

THE HAMILTON MFG. CO.

DONT REMOVE THIS LEAF FROM BOOK

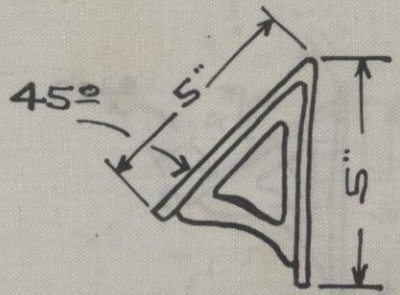

Special Bracket for Space Cases.

PATTERN NO. 453

SEE B. P. NO. 131-C.

THE HAMILTON MFG. CO.

DONT REMOVE THIS LEAF FROM BOOK

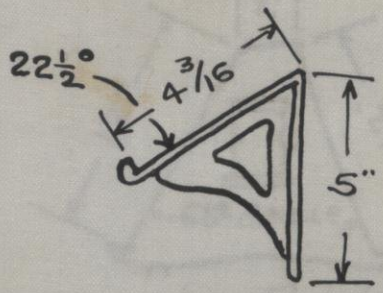

Special Bracket.

PATTERN NO. 451

SEE B. P. NO. 129-C.

THE HAMILTON MFG. CO.

DONT REMOVE THIS LEAF FROM BOOK

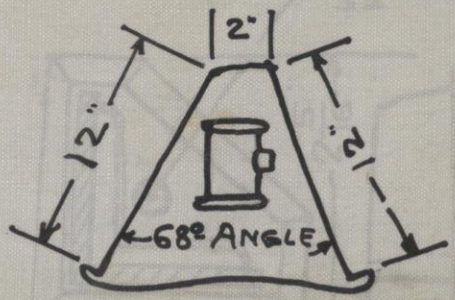

FOR-1¼" PIPE.

Special Overhead Bank Bracket.

PATTERN NO. 450

SEE B. P. NO.-128-C

THE HAMILTON MFG. CO.

DONT REMOVE THIS LEAF FROM BOOK

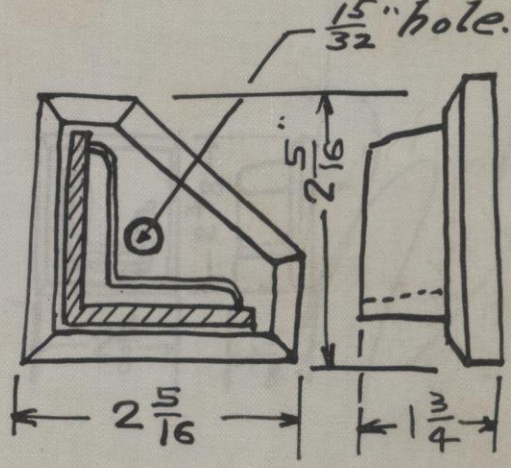

N/G

Shoe for 1 3/4 x 1 3/4 x 3/16" L

PATTERN NO. 449-S

SEE B. P. NO.-127-C.

THE HAMILTON MFG. CO.

DONT REMOVE THIS LEAF FROM BOOK

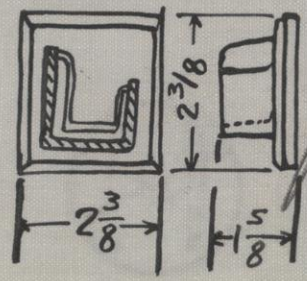

Shoe for 2"x2"x1½-11G C-UPRIGHT

PATTERN NO. 448-R.S.
448-L.S.

SEE B. P. NO. 126-C.

THE HAMILTON MFG. CO.

DONT REMOVE THIS LEAF FROM BOOK

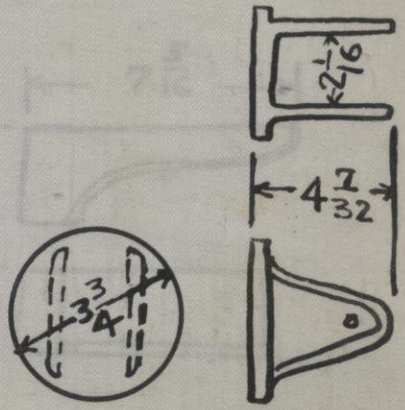

Fork for Stationary Caster.

PATTERN NO. 447.

SEE B. P. NO. —

No Drawing

THE HAMILTON MFG. CO.

DONT REMOVE THIS LEAF FROM BOOK

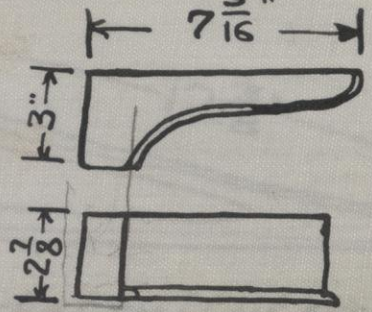

No. 9

Fillet for 1/4" x 3" x 3" Toe Space for 1 1/2 x 3 x 1/8 L.

PATTERN NO. 444 L.S.

SEE B. P. NO. 124-C. " " 444 R.S.

233

THE HAMILTON MFG. CO.

DONT REMOVE THIS LEAF FROM BOOK

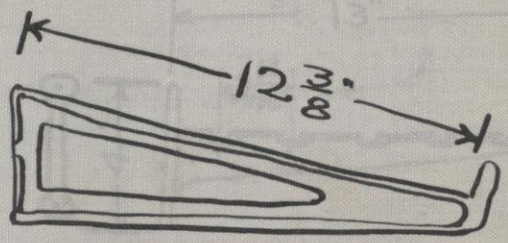

This bracket will fit regular no. 15 socket.

Special no. 15 Galley bracket.

SEE B. P. NO. 123-C

PATTERN NO. 443

THE HAMILTON MFG. CO.

DONT REMOVE THIS LEAF FROM BOOK

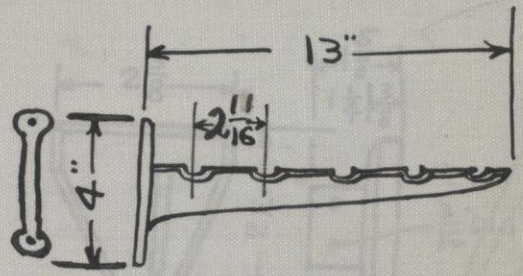

Special Ink Roller Bracket for 2½" Roller

PATTERN NO. 441

SEE B. P. NO. 121-C.

THE HAMILTON MFG. CO.

DONT REMOVE THIS LEAF FROM BOOK

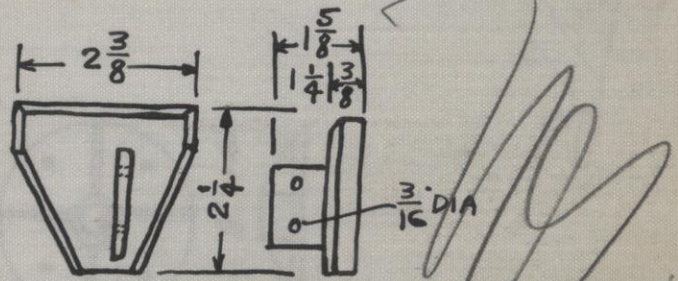

Shoe for 2"x2"x14G. T shaped Upright.

PATTERN NO. 440-S.

SEE B. P. NO. 120-C.

THE HAMILTON MFG. CO.

DONT REMOVE THIS LEAF FROM BOOK

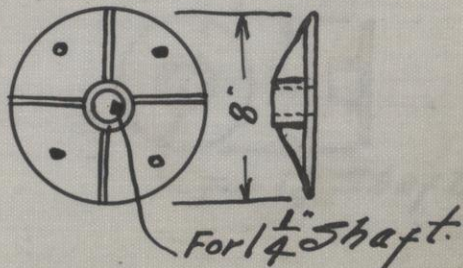

8" Flange for Revolving Card Rack - 7 & 8 tier.

PATTERN NO. 439

SEE B, P. NO. 913 - Drw. 8 Sec 2.

THE HAMILTON MFG. CO.

DONT REMOVE THIS LEAF FROM BOOK

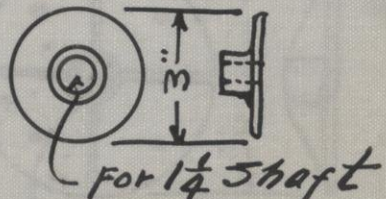

Collar for Revolving Card Rack.

PATTERN NO. 438

SEE B. P. NO. 119-C.

THE HAMILTON MFG. CO.

DONT REMOVE THIS LEAF FROM BOOK

N19

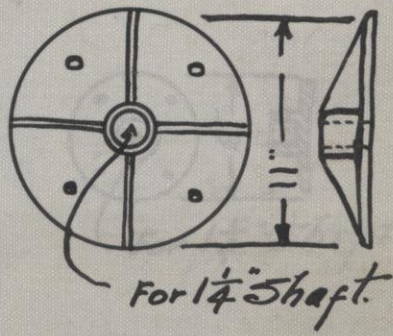

11" Flange for Revolving Card Rack 9 tier & Over

PATTERN NO. 437

SEE B. P. NO. 913 - Drw 8 Sec 2.

THE HAMILTON MFG. CO.

DONT REMOVE THIS LEAF FROM BOOK

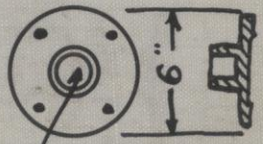

Flange for Revolving Card Rack.

PATTERN NO. 436

SEE B. P. NO.
See B.P. 913 - Drw 8 Sec 2

THE HAMILTON MFG. CO.

DONT REMOVE THIS LEAF FROM BOOK

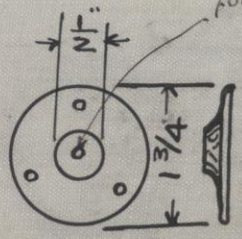

Gated Pattern 10 Castings Copy Hook Base.

PATTERN NO.- 433.

SEE B. P. NO. 110-C.

No Drawing

THE HAMILTON MFG. CO.

DONT REMOVE THIS LEAF FROM BOOK

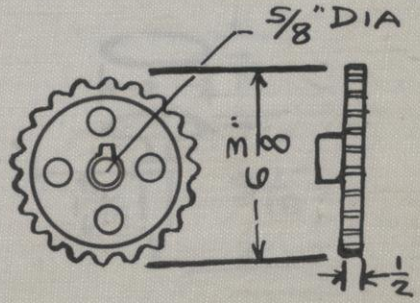

Sprocket Wheel for Roll Curtain.

PATTERN NO. 429-S

SEE B. P. NO. 115-C.

THE HAMILTON MFG. CO.

DONT REMOVE THIS LEAF FROM BOOK

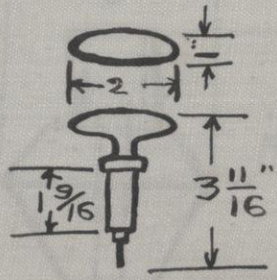

Knob for Safe Cabinet Doors.

PATTERN NO.- 421-S

SEE B. P. NO.- 107-C.

THE HAMILTON MFG. CO.

DONT REMOVE THIS LEAF FROM BOOK

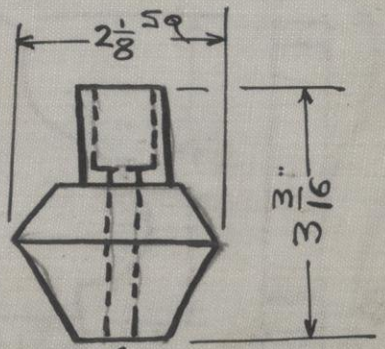

↑ Hole to take stem of Diamond Caster.

Caster Socket for Dental Cabinet.

PATTERN NO. 420-S

SEE B. P. NO. 106-C.

THE HAMILTON MFG. CO.

DONT REMOVE THIS LEAF FROM BOOK

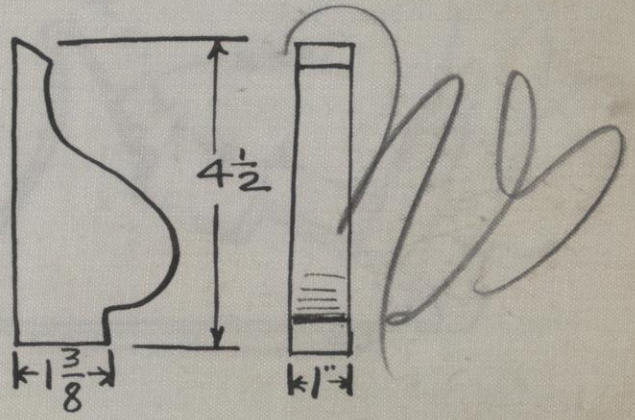

Bracket for Dental Cabinets.

PATTERN NO.- 419

SEE B. P. NO.- 105-C.

THE HAMILTON MFG. CO.

DONT REMOVE THIS LEAF FROM BOOK

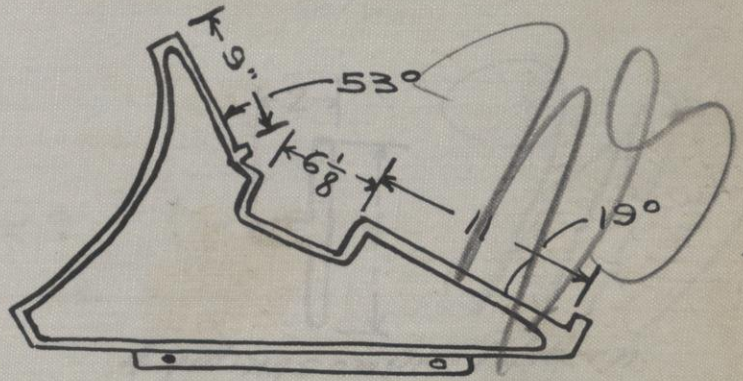

Bracket for Hill Pub Cabinets.

PATTERN NO. 417-L.S

SEE B. P. NO. " " 417-R.S.

THE HAMILTON MFG. CO.

DONT REMOVE THIS LEAF FROM BOOK

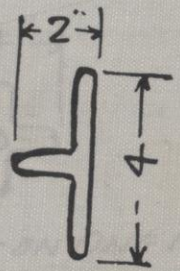

4 fittings on One Pattern.

Fitting for Dental Stand

PATTERN NO.- 416-S

SEE B. P. NO.- 102-C.

No Drawing.

THE HAMILTON MFG. CO.

DONT REMOVE THIS LEAF FROM BOOK

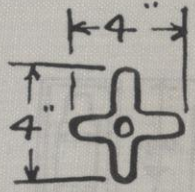

2-ON ONE Pattern

Fittings for Dental Stands

PATTERN NO. 415-5

SEE B. P. NO. 101-C.

* No Drawing.

THE HAMILTON MFG. CO.

DONT REMOVE THIS LEAF FROM BOOK

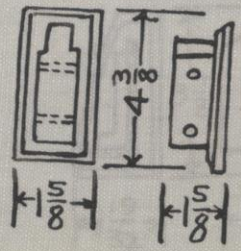

Shoe for $1\frac{7}{32} \times 4 \times 11$ G-Channel.

PATTERN NO. 414-5

SEE B. P. NO. 100-C.

205

THE HAMILTON MFG. CO.

DONT REMOVE THIS LEAF FROM BOOK

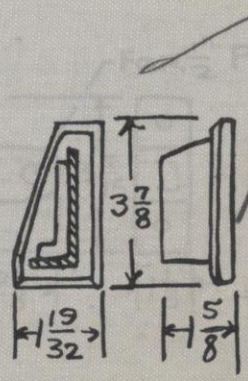

Shoe for $1\frac{7}{32} \times 3\frac{1}{2} \times 11$ G-Angle.

PATTERN NO. 413.L.S

SEE B. P. NO. 99-C. " " 413.R.S.

THE HAMILTON MFG. CO.

DONT REMOVE THIS LEAF FROM BOOK

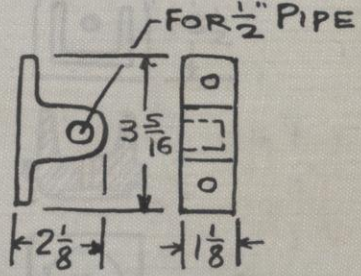

Handle Socket

PATTERN NO. 410-S

SEE B. P. NO.-97-C.

THE HAMILTON MFG. CO.

DONT REMOVE THIS LEAF FROM BOOK

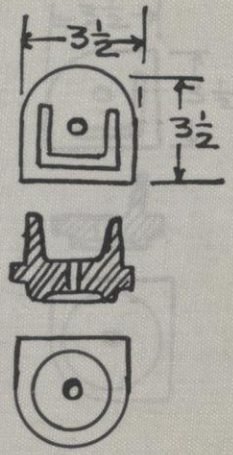

Caster Flange for 2"x3¼"x11G-E-Barnhardt Caster.

PATTERN NO.-409-S

SEE B. P. NO.-96-C.

THE HAMILTON MFG. CO.

DONT REMOVE THIS LEAF FROM BOOK

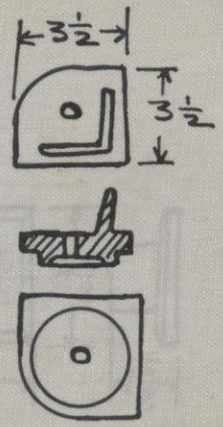

Caster flange for 3x3x⅛ L - Barnhardt Caster

PATTERN NO. 408-S

SEE B. P. NO. 95-C.

THE HAMILTON MFG. CO.

DONT REMOVE THIS LEAF FROM BOOK

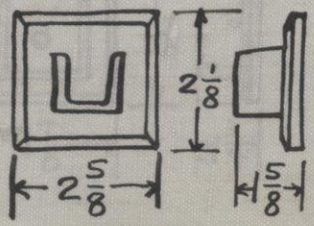

NG

Shoe for 2x1½x11G-Channel.

PATTERN NO. 407-S.

SEE B. P. NO.-94-C.

THE HAMILTON MFG. CO.

DONT REMOVE THIS LEAF FROM BOOK

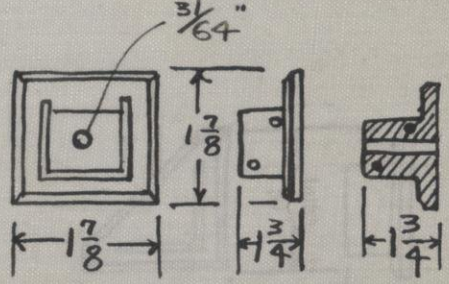

Shoe for 1½ x 1½ x 13-G-Channel.

PATTERN NO.-405-S

SEE B. P. NO.-92-C.

THE HAMILTON MFG. CO.

DONT REMOVE THIS LEAF FROM BOOK

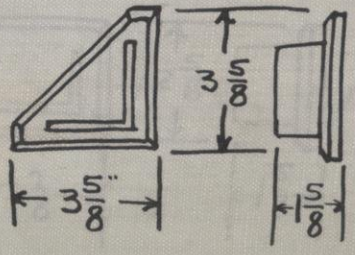

Shoe for 3x3x 3/16" Angle.

PATTERN NO.-403-S.

SEE B. P. NO.-90-C.

THE HAMILTON MFG. CO.

DONT REMOVE THIS LEAF FROM BOOK

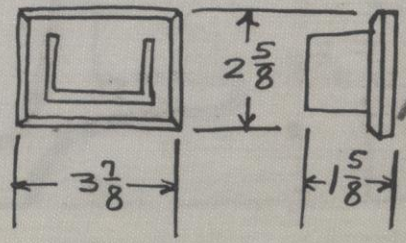

Shoe for 3¼ x 2 x ⅛ Channel.

PATTERN NO.- 402-5

SEE B. P. NO.- 89 C.

THE HAMILTON MFG. CO.

DONT REMOVE THIS LEAF FROM BOOK

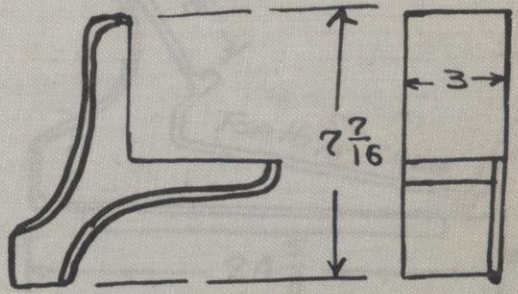

Fillet for 3x3 Toe Space for 1½x2x3/16 L

PATTERN NO. 401-L.S

" " 401-R.S

SEE B. P. NO. - 88-C.

THE HAMILTON MFG. CO.

DONT REMOVE THIS LEAF FROM BOOK

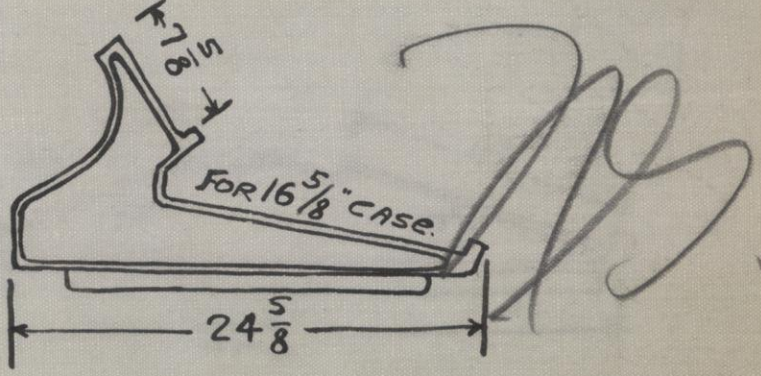

BRACKET FOR CUT COST TOPS #5418 #542

PATTERN NO. 400-L.S

SEE B. P. NO. -87-C. " " 400-R.S

THE HAMILTON MFG. CO.

DONT REMOVE THIS LEAF FROM BOOK

N/G

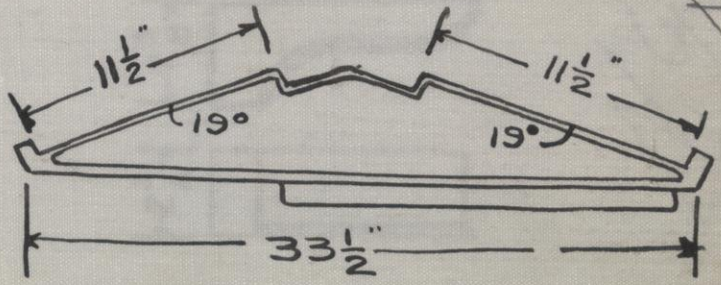

Special Bracket for B.P. 00597.

PATTERN NO. 398 L.S

" " 398 R.S

SEE B. P. NO. 86-C.

THE HAMILTON MFG. CO.

DONT REMOVE THIS LEAF FROM BOOK

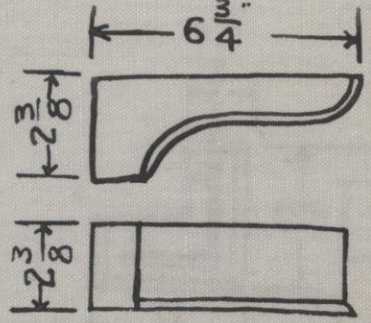

Fillets for 2½ x 2½ Toe Space.

PATTERN NO. 397-L.S

" - 397-R.S.

SEE B. P. NO.

No Drawing - Made from B/P. 7-C.

THE HAMILTON MFG. CO.

DONT REMOVE THIS LEAF FROM BOOK

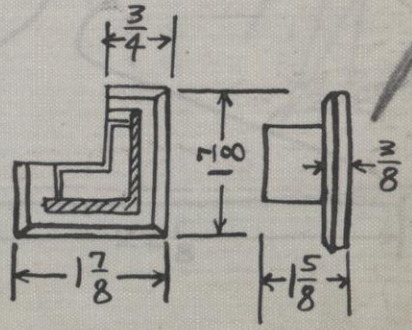

Shoe for 1¼x1¼x⅛ Angles.

PATTERN NO. 394-S

SEE B. P. NO. -83-C.

THE HAMILTON MFG. CO.

DONT REMOVE THIS LEAF FROM BOOK

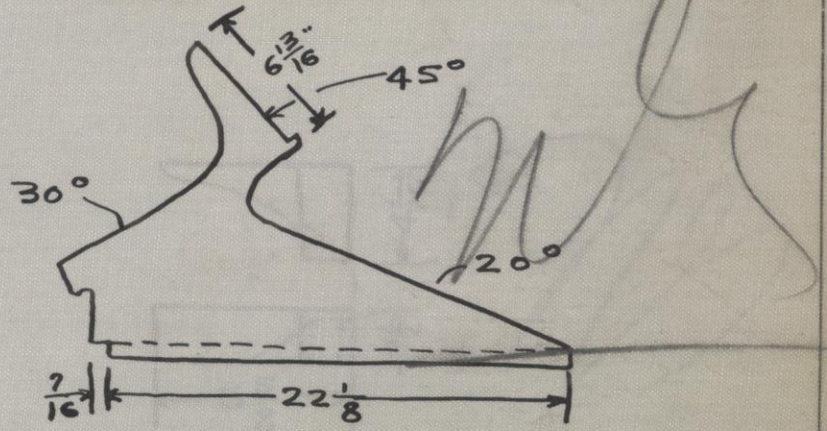

Concentration Bracket

PATTERN NO. 389. L.W.

" " 389. R.W.

SEE B. P. NO.- 78-C.

THE HAMILTON MFG. CO.

DONT REMOVE THIS LEAF FROM BOOK

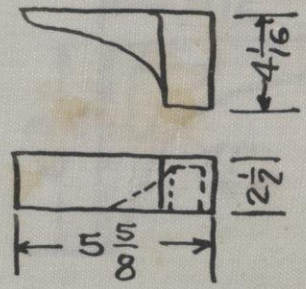

End Fillets for Ext front Cabs - 472 & 474.

PATTERN NO. 387. L.S

" " 387. R.S

SEE B. P. NO. - 76-C

THE HAMILTON MFG. CO.

DONT REMOVE THIS LEAF FROM BOOK

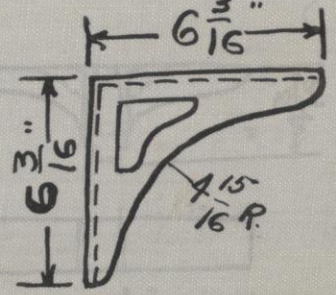

Bracket for Concentration Top

PATTERN NO. 386

SEE B. P. NO.-75-C.

THE HAMILTON MFG. CO.

DONT REMOVE THIS LEAF FROM BOOK

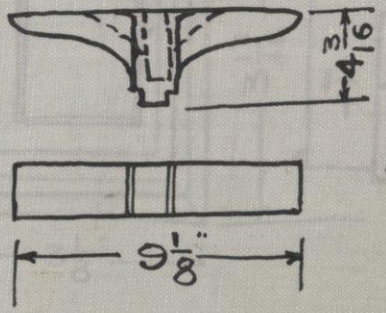

Center Fillet for Ext front Cabs - 472 & 974

PATTERN NO. 3855

SEE B. P. NO. 74-C

THE HAMILTON MFG. CO.

DONT REMOVE THIS LEAF FROM BOOK

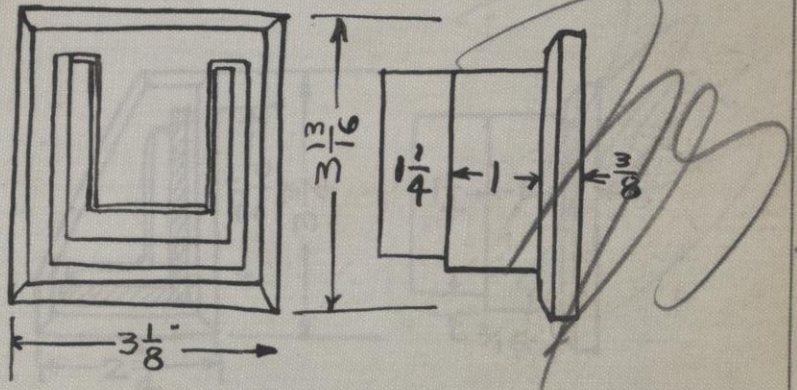

Shoe for 2¼"x3"x11G-L

PATTERN NO. 381-S

SEE B. P. NO. - 70-C.

173

THE HAMILTON MFG. CO.

DONT REMOVE THIS LEAF FROM BOOK

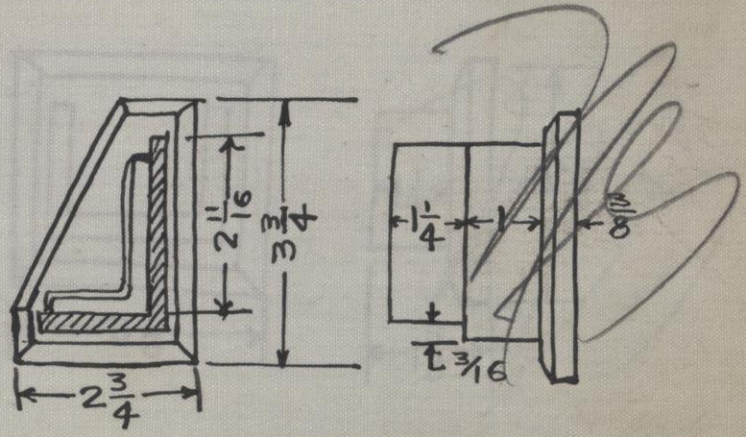

Shoe for 2x3x3/16 L - Raised 1" from floor.

PATTERN NO. 380-L.S.

" " 380-R.S.

SEE B. P. NO.-69-C

THE HAMILTON MFG. CO.

DONT REMOVE THIS LEAF FROM BOOK

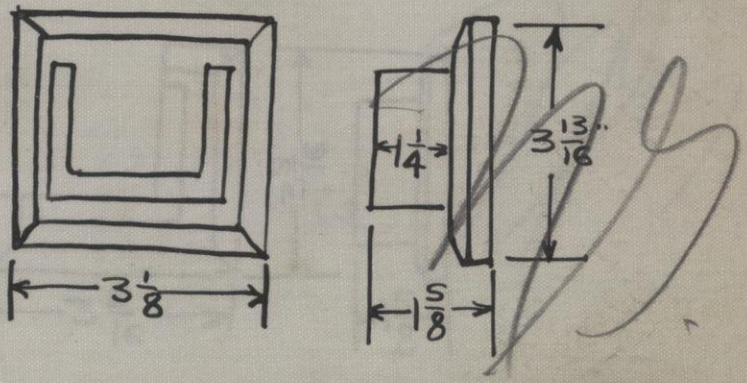

Shoe for 2¼x3x11G-Channel

PATTERN NO. 373-5

SEE B. P. NO. 62-C.

THE HAMILTON MFG. CO.

DONT REMOVE THIS LEAF FROM BOOK

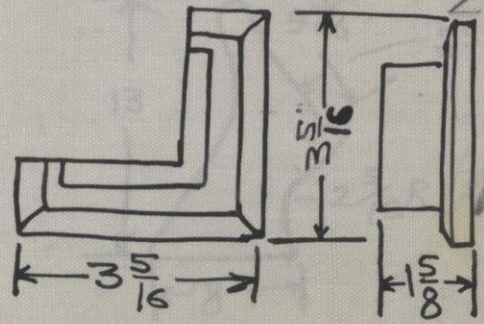

Shoe for $2\frac{1}{2} \times 2\frac{1}{2} \times \frac{1}{8}$ L & $2\frac{1}{2} \times 2\frac{1}{2} \times \frac{3}{16}$ L

PATTERN NO. 372-S

SEE B. P. NO.- 61-C.

THE HAMILTON MFG. CO.

DONT REMOVE THIS LEAF FROM BOOK

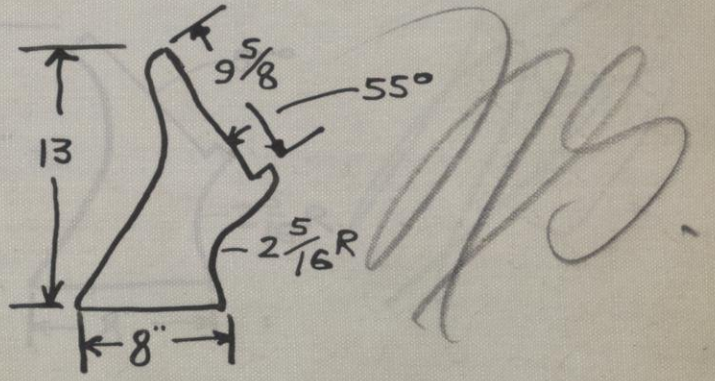

Ad Room Bracket

PATTERN NO. 369. L.W

" " 369. R.W.

SEE B. P. NO. -58-C

THE HAMILTON MFG. CO.

DONT REMOVE THIS LEAF FROM BOOK

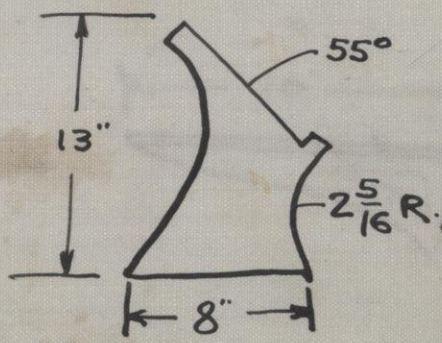

Ad Room Bracket

PATTERN NO. 368 L.S

" " 368 R.S

SEE B. P. NO. 57-C

THE HAMILTON MFG. CO.

DONT REMOVE THIS LEAF FROM BOOK

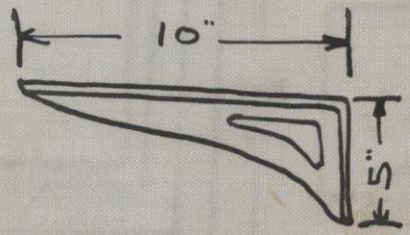

Bracket for 472 & 474 Cabinets

PATTERN NO. 366

SEE B. P. NO. -55-C

THE HAMILTON MFG. CO.

DONT REMOVE THIS LEAF FROM BOOK

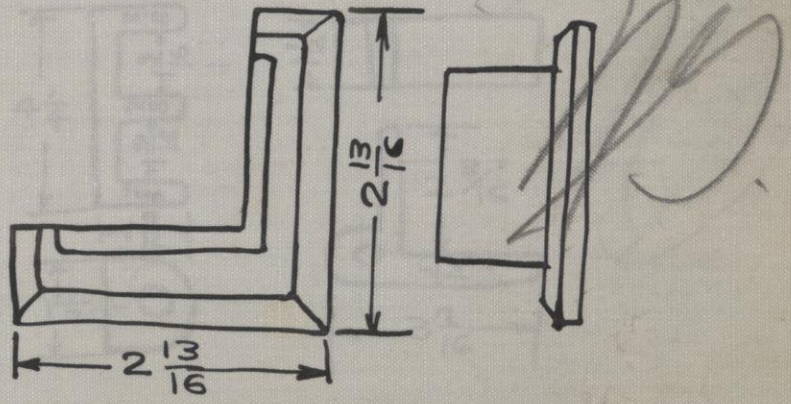

Shoe for 2x2x1/8 L & 2x2x3/16" L

PATTERN NO. 365-S

SEE B. P. NO. 54-C.

THE HAMILTON MFG. CO.

DONT REMOVE THIS LEAF FROM BOOK

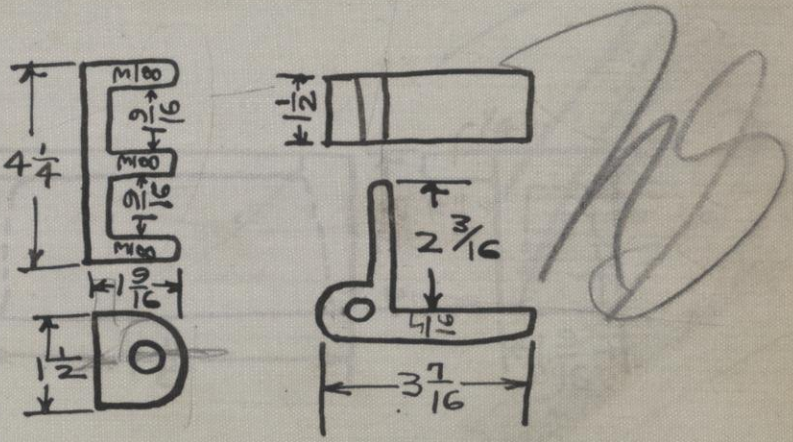

Hinge for Swinging Quarter Cases.

PATTERN NO. 364

SEE B. P. NO. 53-C.

THE HAMILTON MFG. CO.

DONT REMOVE THIS LEAF FROM BOOK

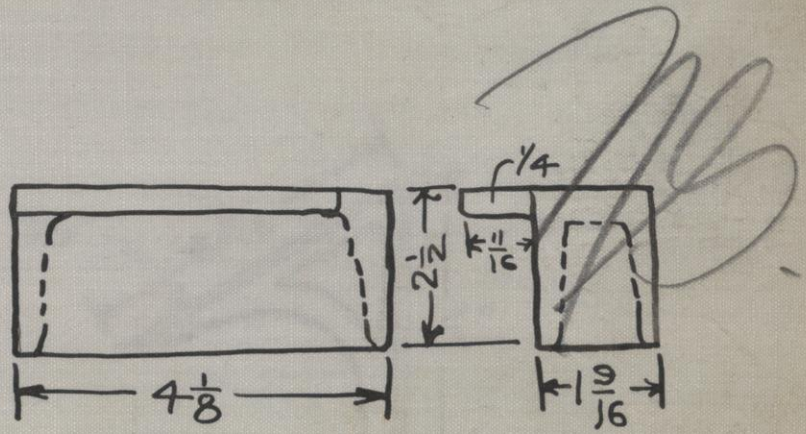

End Fillets for Extension Front Cab'ts

PATTERN NO. 363 LS

" " 363 RS

SEE B. P. NO.-52-C

157

THE HAMILTON MFG. CO.

DONT REMOVE THIS LEAF FROM BOOK

NG

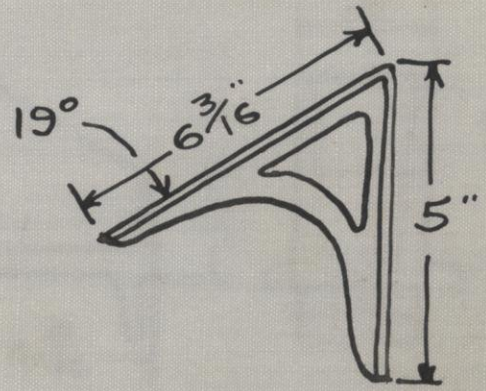

Special 19° Bracket

PATTERN NO. 362

SEE B. P. NO. 51-C.

THE HAMILTON MFG. CO.

DONT REMOVE THIS LEAF FROM BOOK

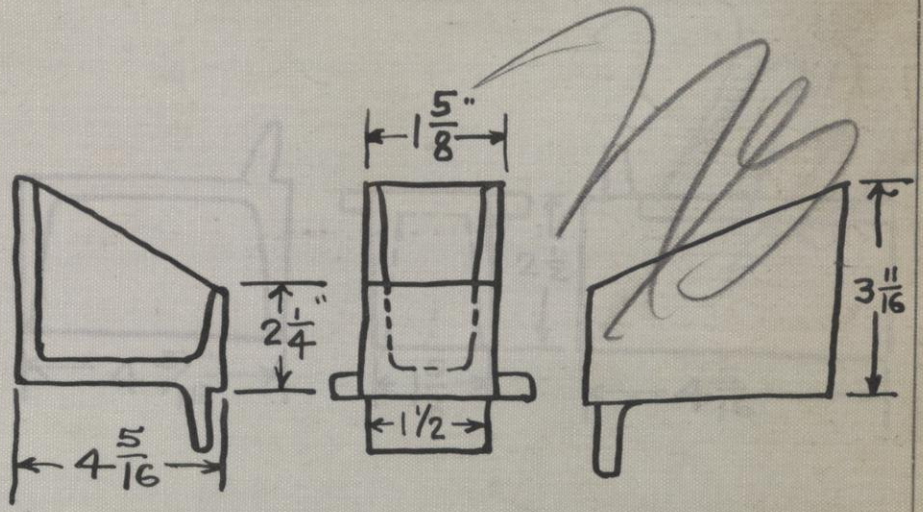

Spec Center Fillet for Extension Front Cabts.

PATTERN NO. 3615

SEE B. P. NO. 50-C.

THE HAMILTON MFG. CO.

DONT REMOVE THIS LEAF FROM BOOK

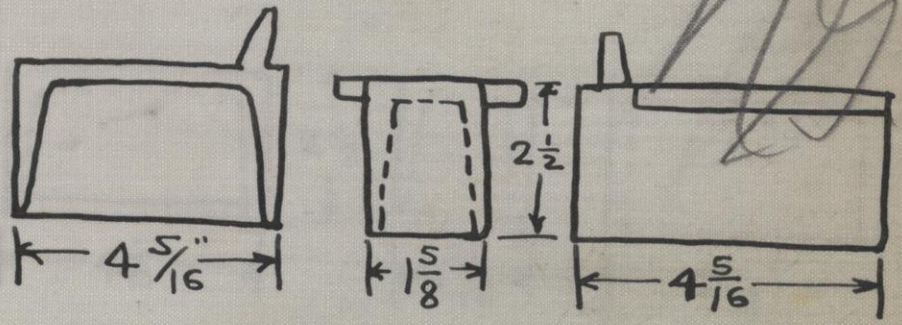

Center fillet for Extension Front Cabs

PATTERN NO. 360-5

SEE B. P. NO. -49-C

THE HAMILTON MFG. CO.

DONT REMOVE THIS LEAF FROM BOOK

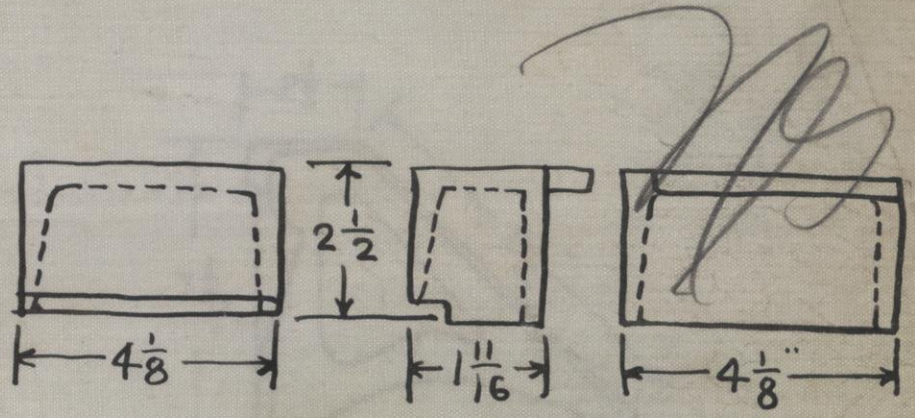

End Fillets for Extension Front Cabinets

PATTERN NO. 359.L.S

" 359.R.S

SEE B. P. NO.-48-C.

THE HAMILTON MFG. CO.

DONT REMOVE THIS LEAF FROM BOOK

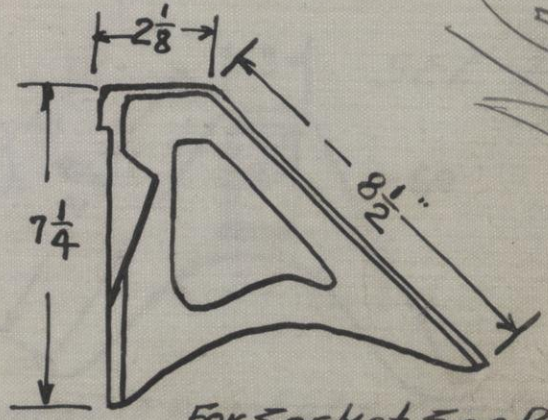

For Socket See Pat 308

Special Galley Dump Bracket

PATTERN NO. 358

SEE B. P. NO. 47-C.

THE HAMILTON MFG. CO.

DONT REMOVE THIS LEAF FROM BOOK

See Pat 640

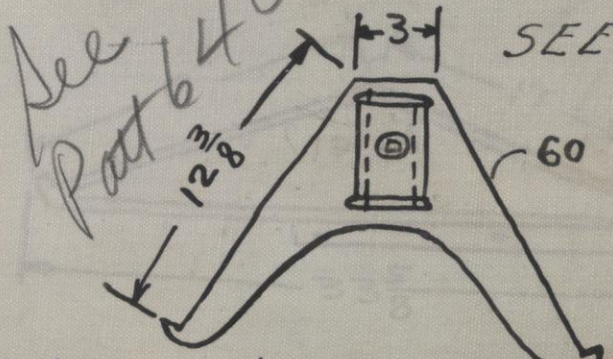

SEE PATTERN # 640

For Intermediate Brackets See Pat. 356 " 338W.

Bracket for 12" Bank for 1/4 Pipe.

PATTERN NO. 355

SEE B. P. NO. 45-C.

THE HAMILTON MFG. CO.

DONT REMOVE THIS LEAF FROM BOOK

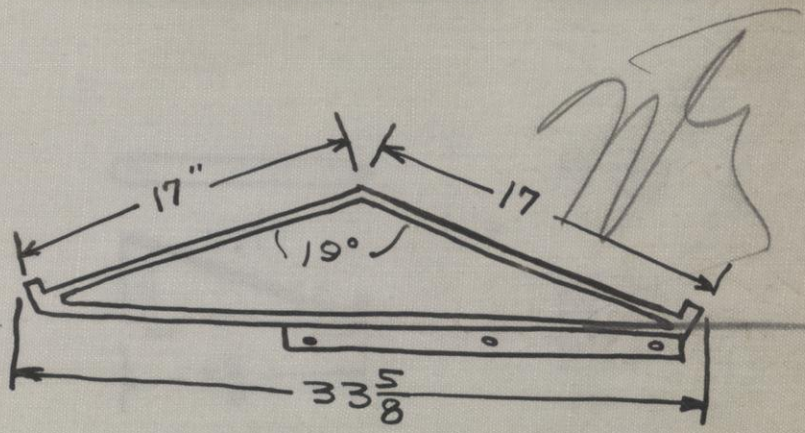

Ad Mans Bracket.

PATTERN NO. 353-L.S

" " 353-R.S.

SEE B. P. NO.-43-C.

THE HAMILTON MFG. CO.

DONT REMOVE THIS LEAF FROM BOOK

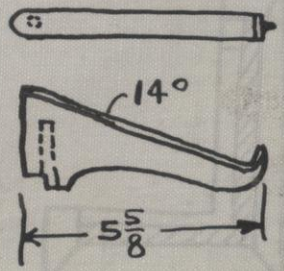

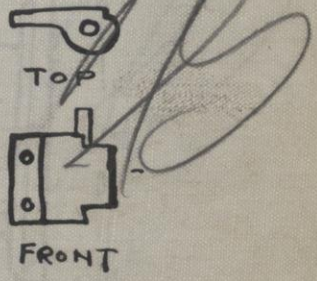

SWING BRACKET FOR Mills Head Letter Cabt.

PATTERN NO. 352

SEE B. P. NO. 41-C.

146

THE HAMILTON MFG. CO.

DONT REMOVE THIS LEAF FROM BOOK

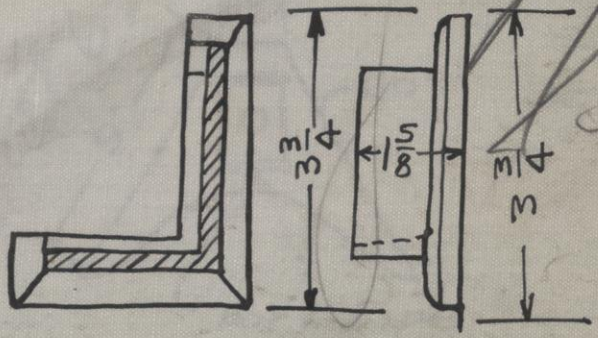

Shoe for 3x2x3/16" Angle.

PATTERN NO. 350-L.S.

" " 350-R.S.

SEE B. P. NO.-39-C.

THE HAMILTON MFG. CO.

DONT REMOVE THIS LEAF FROM BOOK

See Pat 636

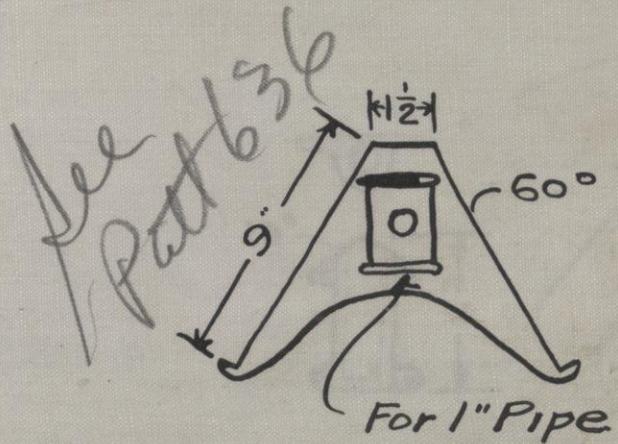

WG

9" Bracket for Overhead Bank

PATTERN NO. 349

SEE B. P. NO. - 38-C.

THE HAMILTON MFG. CO.

DONT REMOVE THIS LEAF FROM BOOK

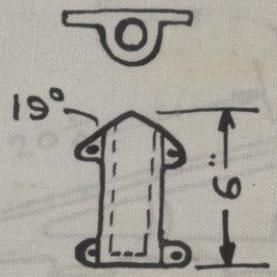

Socket for 1" Pipe.

PATTERN NO. 348

SEE B. P. NO. - 37-C.

THE HAMILTON MFG. CO.

DONT REMOVE THIS LEAF FROM BOOK

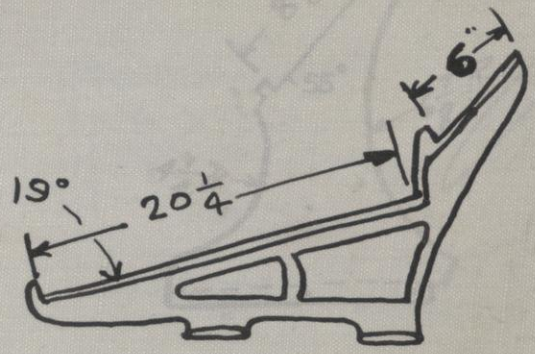

Special Bracket.

PATTERN NO. 347

SEE B. P. NO. 36-C

THE HAMILTON MFG. CO.

DONT REMOVE THIS LEAF FROM BOOK

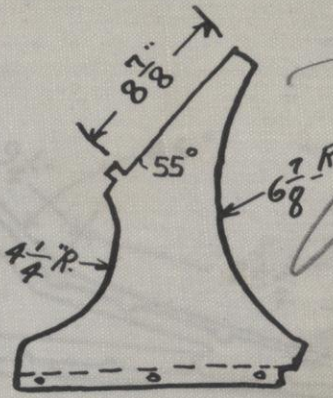

Mills Bracket No 2.

PATTERN NO. 346 R.W.

SEE B. P. NO. 35-C.

THE HAMILTON MFG. CO.

DONT REMOVE THIS LEAF FROM BOOK

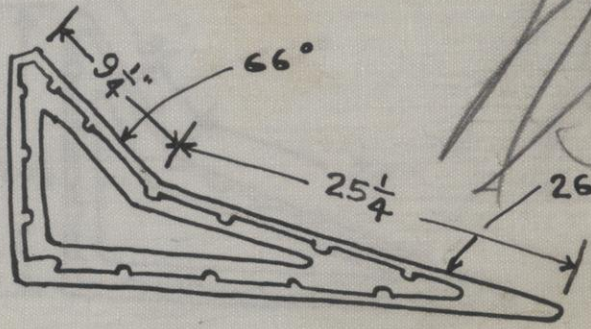

Bracket for Times Order

PATTERN NO: 345-S

SEE B. P. NO.- 33-C.

THE HAMILTON MFG. CO.

DONT REMOVE THIS LEAF FROM BOOK

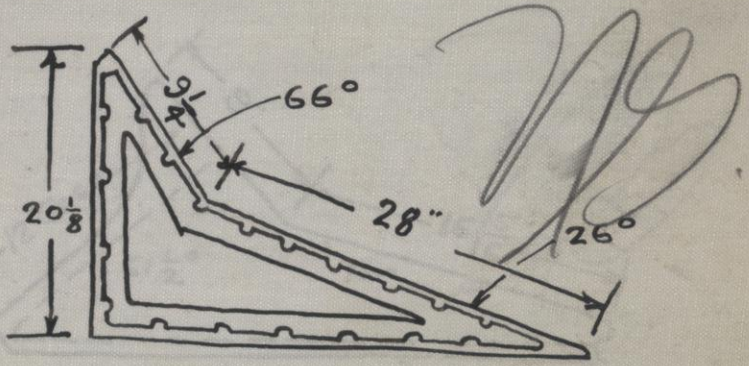

Bracket for Times Order.

PATTERN NO. 344-5

SEE B. P. NO.-32-C

THE HAMILTON MFG. CO.

DONT REMOVE THIS LEAF FROM BOOK

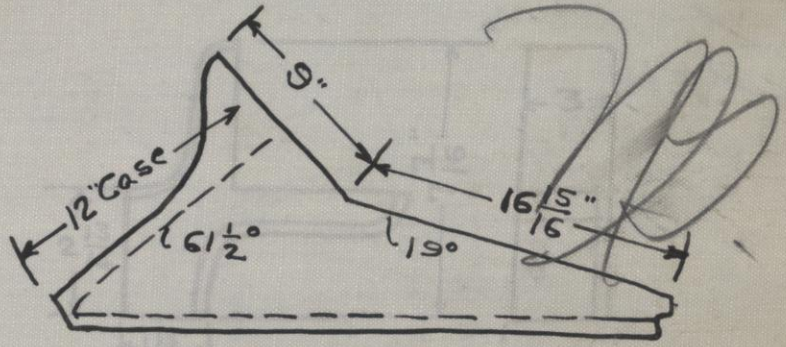

Old Butler Bracket

PATTERN NO. 343. L.W

" " 343. R.W.

SEE B. P. NO.-22-C.

No Drawing.

THE HAMILTON MFG. CO.

DONT REMOVE THIS LEAF FROM BOOK

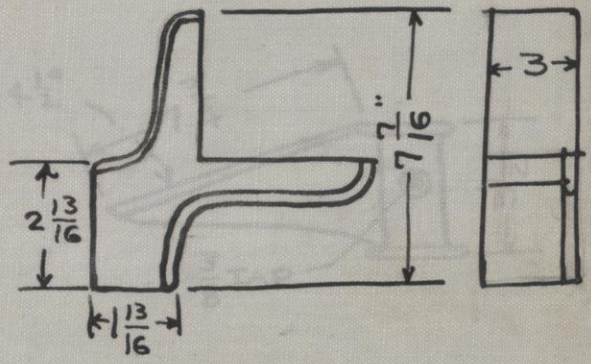

Fillet for Toe Space - 3 X 3 1/8 L - Stone Frame.

PATTERN NO. 342 L.S

" " 342 R.S

SEE B. P. NO. -20-C.

THE HAMILTON MFG. CO.

DONT REMOVE THIS LEAF FROM BOOK

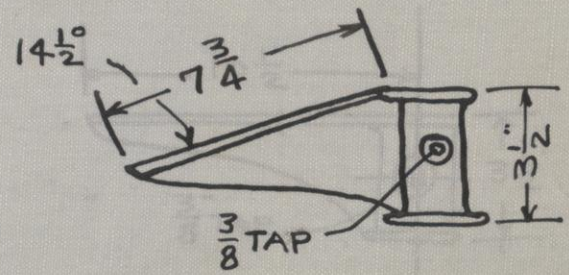

NG

14½° Bracket for ¾" Pipe.

PATTERN NO. 341

SEE B. P. NO. -19-C.

135

THE HAMILTON MFG. CO.

DONT REMOVE THIS LEAF FROM BOOK

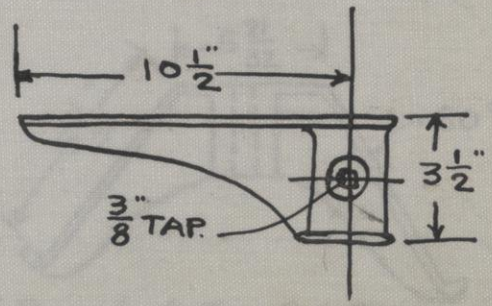

HG

Horizontal Bracket for 3/4" Pipe.

PATTERN NO. 340

SEE B. P. NO. -18-C

THE HAMILTON MFG. CO.

DONT REMOVE THIS LEAF FROM BOOK

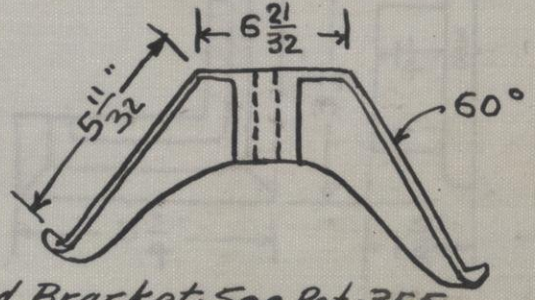

NG

For End Bracket See Pat 355

Intermediate Bracket for 12" Overhead Banks

PATTERN NO. 338 W.

SEE B. P. NO. -17-C.

THE HAMILTON MFG. CO.

DONT REMOVE THIS LEAF FROM BOOK

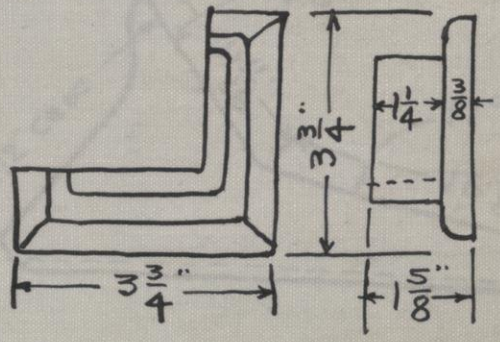

16

Shoe for 3x3x 3/16" Angle.

PATTERN NO. 336.5

SEE B. P. NO. -13-C.

130

THE HAMILTON MFG. CO.

DONT REMOVE THIS LEAF FROM BOOK

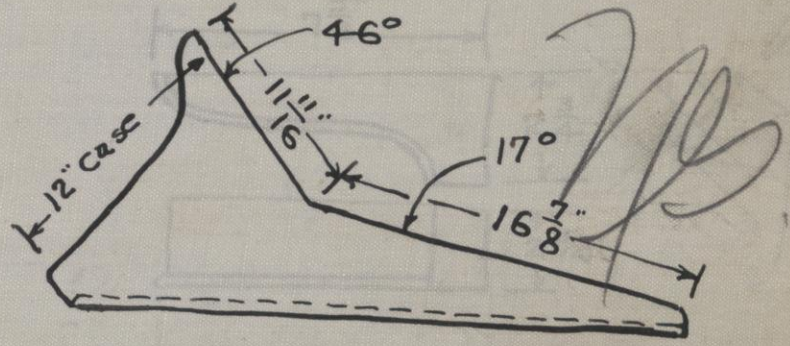

Special Bracket for Butler Outfit.

PATTERN NO. 335 L.W.
" " 335 R.W.

SEE B. P. NO.-12-C.

No Drawing

THE HAMILTON MFG. CO.

DONT REMOVE THIS LEAF FROM BOOK

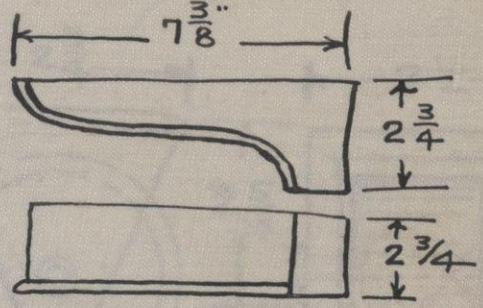

NG

Fillet for 3½ x 3½ " Angles.

PATTERN NO. 334 L.S

" " 334 R.S.

SEE B. P. NO. 11-C

129

THE HAMILTON MFG. CO.

DONT REMOVE THIS LEAF FROM BOOK

PAT-331

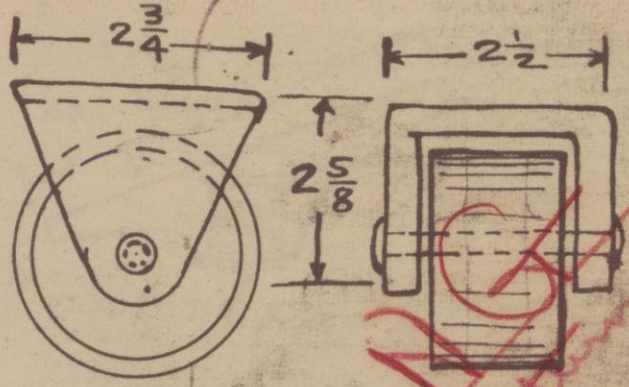

PAT 331A

Front Caster for Magazine Drawer

PATTERN NO. 331

SEE B. P. NO. -5-C.
-202-C

THE HAMILTON MFG. CO.

DONT REMOVE THIS LEAF FROM BOOK

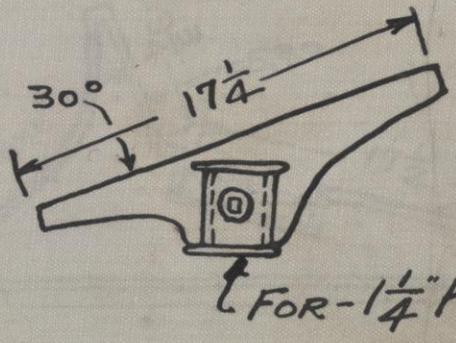

N/G

Lower Bracket for Overhead Bank

PATTERN NO. 329-L.S

" " 329-R.S

SEE B. P. NO.-29-C.

THE HAMILTON MFG. CO.

DONT REMOVE THIS LEAF FROM BOOK

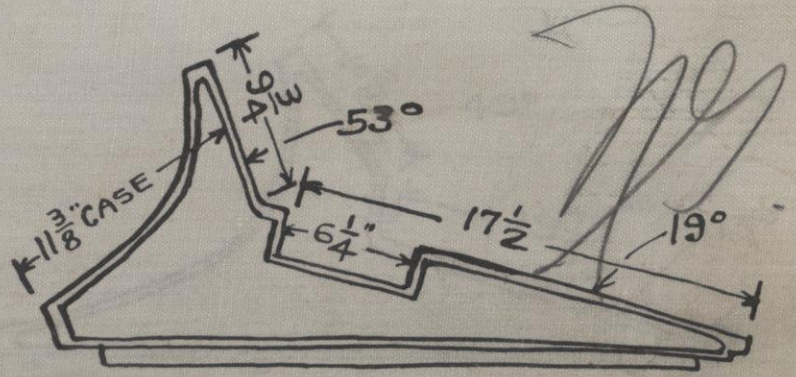

Special Mills Bracket

PATTERN NO. 323-L-S

" " 323-R-S

SEE B. P. NO.-28-C

THE HAMILTON MFG. CO.

DONT REMOVE THIS LEAF FROM BOOK

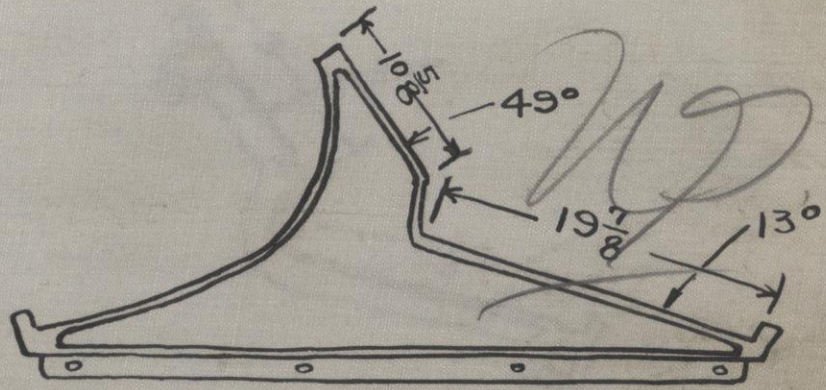

Special Bracket

PATTERN NO. 322-L-S

SEE B. P. NO. 27-C. " " 322-RS

THE HAMILTON MFG. CO.

DONT REMOVE THIS LEAF FROM BOOK

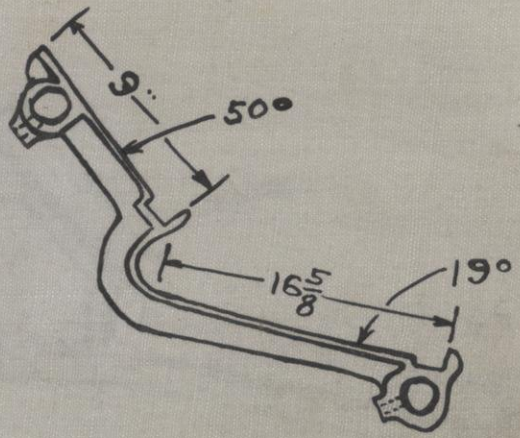

Bracket for Case Stands

PATTERN NO. 321-S.

SEE B. P. NO.-8-C.

THE HAMILTON MFG. CO.

DONT REMOVE THIS LEAF FROM BOOK

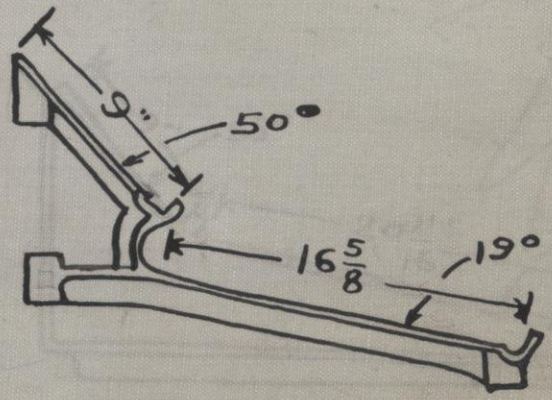

Bracket for Case Stands

PATTERN NO. 320-L.S.
320-R.S.

SEE B. P. NO.- 9C

THE HAMILTON MFG. CO.

DONT REMOVE THIS LEAF FROM BOOK

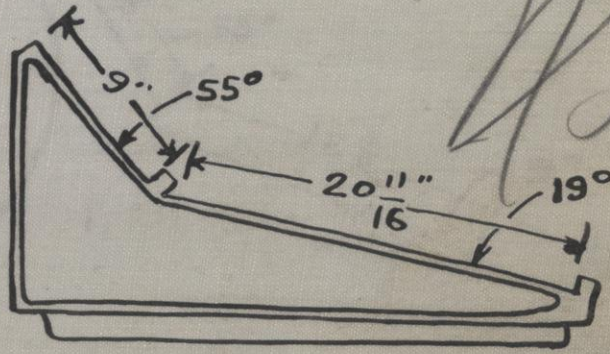

Special Tracy Top

PATTERN NO. 318-L.S.

SEE B. P. NO.-14-C. " " 318-R.S.

THE HAMILTON MFG. CO.

DONT REMOVE THIS LEAF FROM BOOK

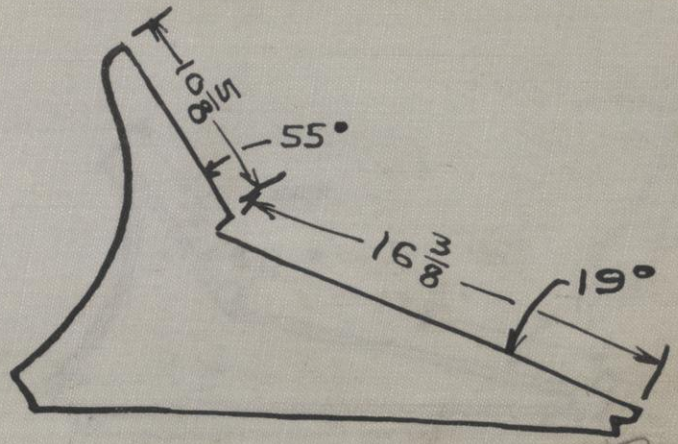

Mills Bracket

PATTERN NO. 313 LW
313 R.W.

SEE B. P. NO.-10-C.

THE HAMILTON MFG. CO.

DONT REMOVE THIS LEAF FROM BOOK

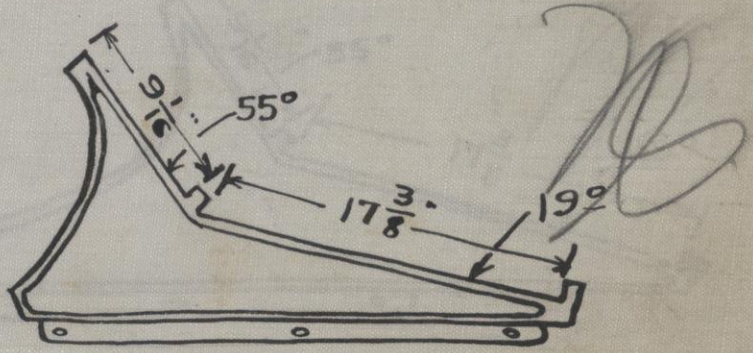

Mills Bracket

PATTERN NO. 312-L.S
312-R.S.

SEE B. P. NO.-23-C.

THE HAMILTON MFG. CO.

DONT REMOVE THIS LEAF FROM BOOK

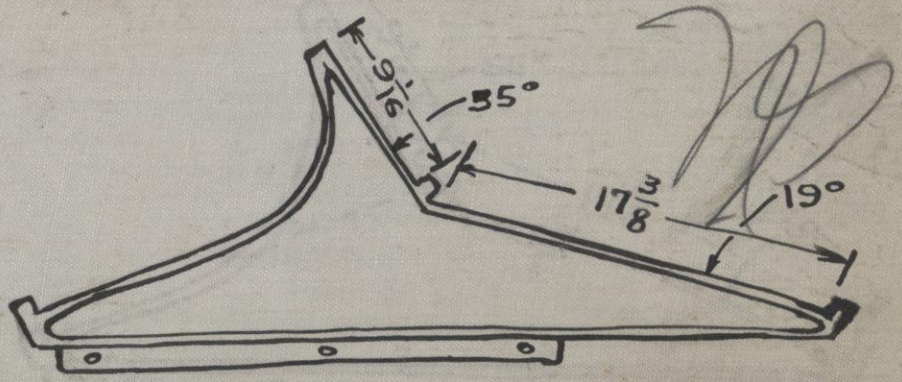

Tracy Bracket.

PATTERN NO. 311-L.S.

" " 311-R.S.

SEE B. P. NO. 24-C.

THE HAMILTON MFG. CO.

DONT REMOVE THIS LEAF FROM BOOK

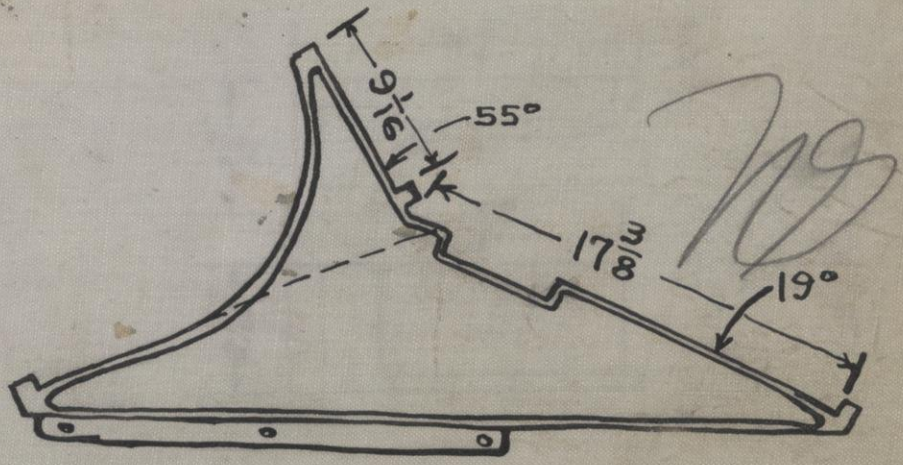

American Bracket

PATTERN NO. 310-L.S.
310-R.S.

SEE B. P. NO.-24-C.

THE HAMILTON MFG. CO.

DON'T REMOVE THIS LEAF FROM BOOK

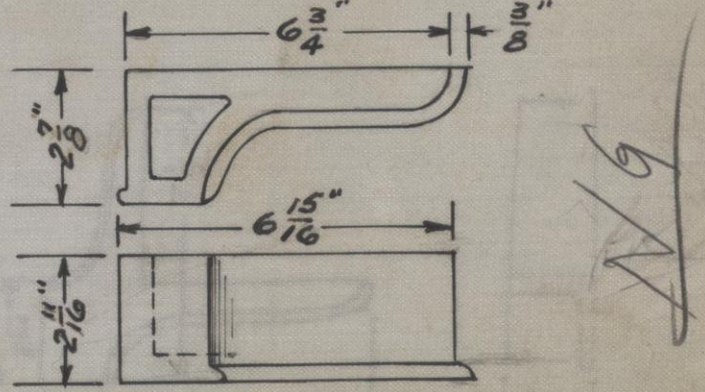

FILLET FOR TOE SPACE

3" x 3" x 1/4" ANGLE

2" x 3" x 1/8" POST

PATTERN NO. 309 R&L

SEE B. P. NO. 7-C

THE HAMILTON MFG. CO.

DONT REMOVE THIS LEAF FROM BOOK

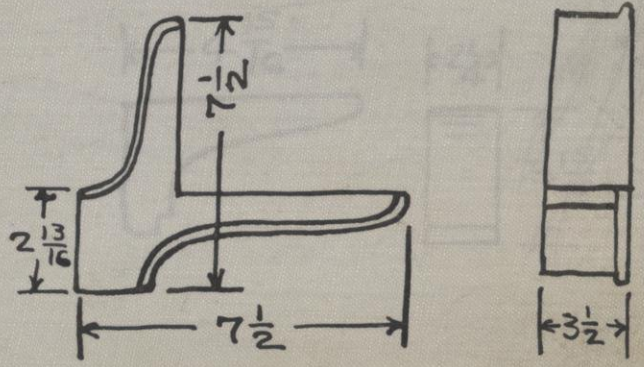

NG

Fillet for Toe Space.

PATTERN NO. 306-LS.

" " 306-RS

SEE B. P. NO. - 6-C.

THE HAMILTON MFG. CO.

DONT REMOVE THIS LEAF FROM BOOK

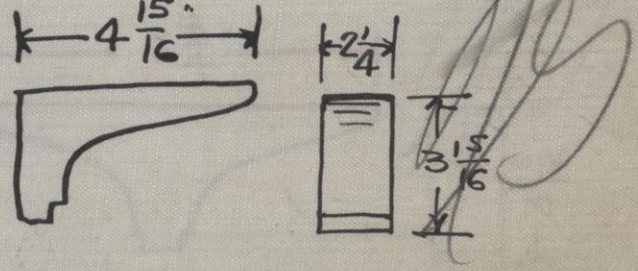

End Fillets for Cabinets.

PATTERN NO. 305-L.S

SEE B. P. NO.- 42-c. " " 305-R.S.

THE HAMILTON MFG. CO.

DONT REMOVE THIS LEAF FROM BOOK

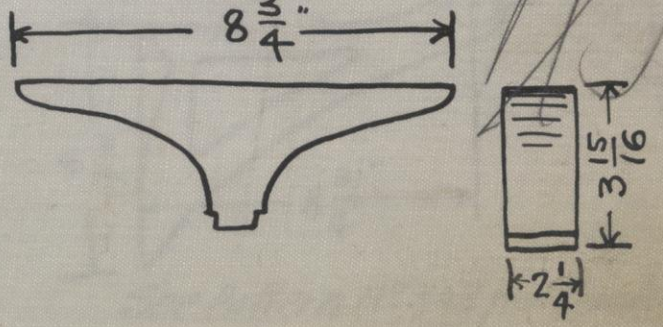

Center Fillet for Cabinets

PATTERN NO. 304-5

SEE B. P. NO. 42-C.

THE HAMILTON MFG. CO.

DONT REMOVE THIS LEAF FROM BOOK

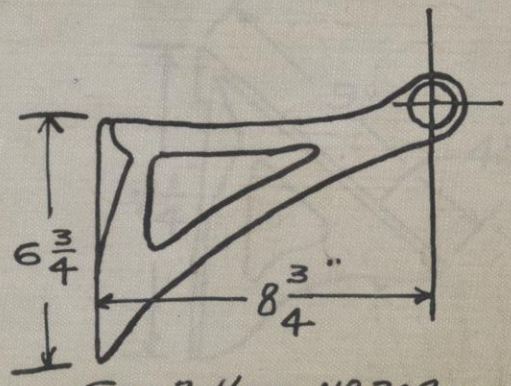

See Pattern No. 308 for Socket.

Foot Rail Bracket.

PATTERN NO. 303-R
303-L
303-C

SEE B. P. NO.-26-C

No Drawing.

THE HAMILTON MFG. CO.

DONT REMOVE THIS LEAF FROM BOOK

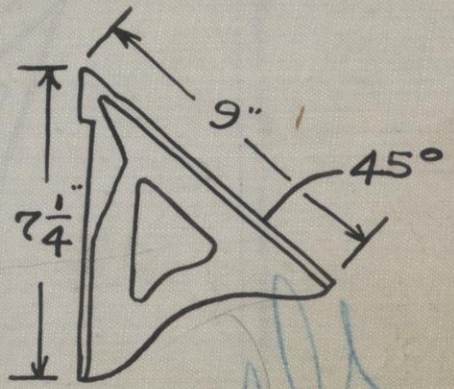

Galley Dump Bracket

PATTERN NO. 302

SEE B. P. NO. -26-C

No Drawing.

THE HAMILTON MFG. CO.

DON'T REMOVE THIS LEAF FROM BOOK

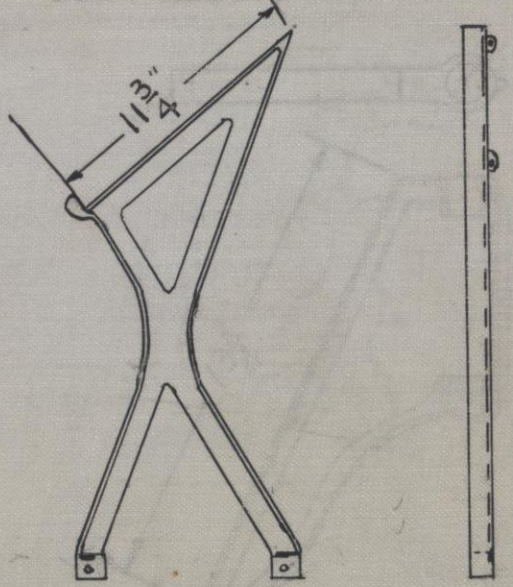

PATTERN NO. 45

SEE B. P. NO.

THE HAMILTON MFG. CO.

DON'T REMOVE THIS LEAF FROM BOOK

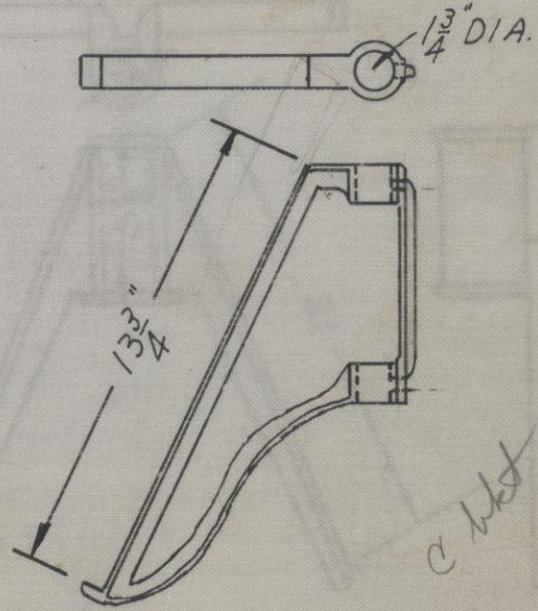

NG

c bkt

PATTERN NO. 44

SEE B. P. NO.

THE HAMILTON MFG. CO.

DON'T REMOVE THIS LEAF FROM BOOK

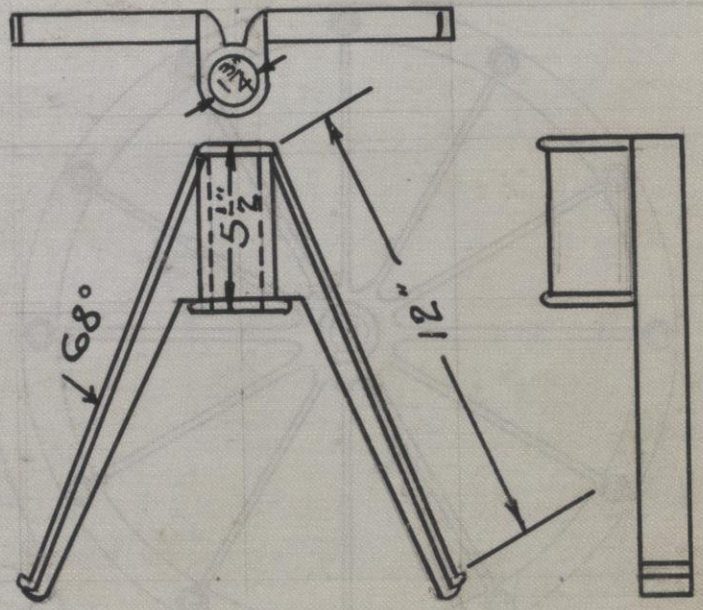

PATTERN NO.

SEE B. P. NO.

none in stock

THE HAMILTON MFG. CO.

DON'T REMOVE THIS LEAF FROM BOOK

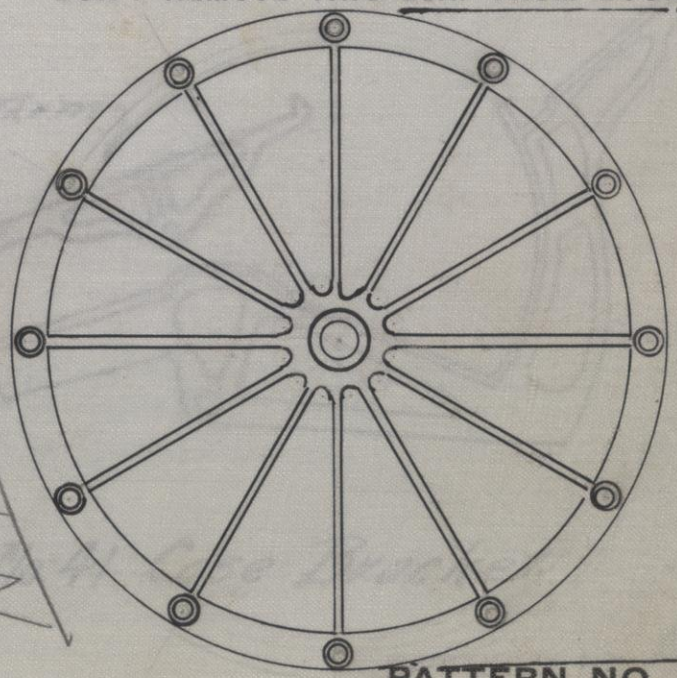

roller bkt

PATTERN NO.

SEE B. P. NO.

THE HAMILTON MFG. CO.

DONT REMOVE THIS LEAF FROM BOOK

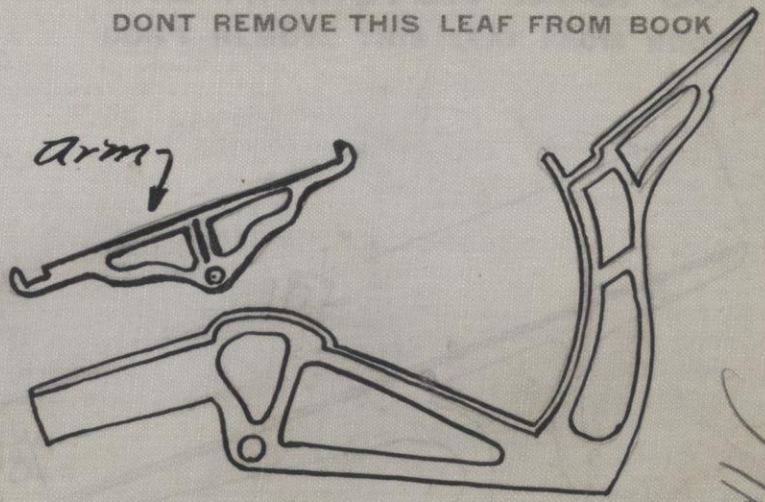

NG

No. 41 Case Bracket.

PATTERN NO. 41L

SEE B. P. NO. " " 41R

No Drawing

THE HAMILTON MFG. CO.

DON'T REMOVE THIS LEAF FROM BOOK

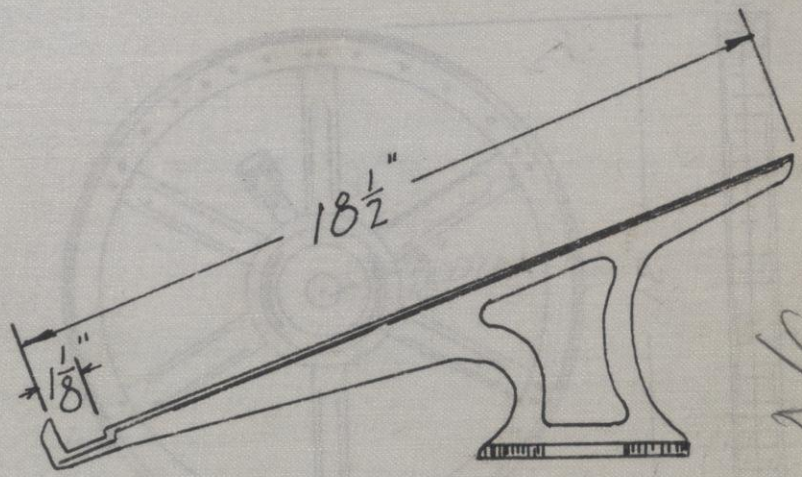

22 in Stock

Cabot

NG

PATTERN NO. TS 40

SEE B. P. NO.

THE HAMILTON MFG. CO.

DON'T REMOVE THIS LEAF FROM BOOK.

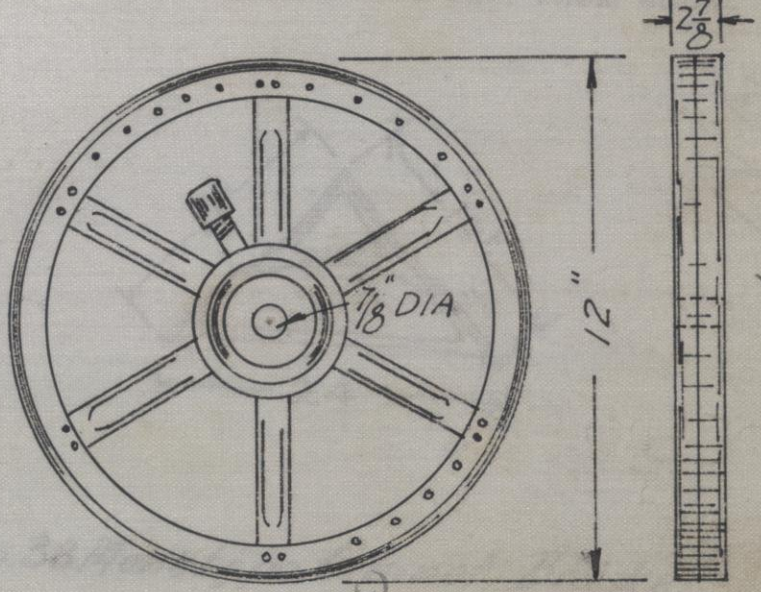

250 in Stock

NG

12" dia wheel

PATTERN NO. 39

SEE B. P. NO.

THE HAMILTON MFG. CO.

DONT REMOVE THIS LEAF FROM BOOK

NG

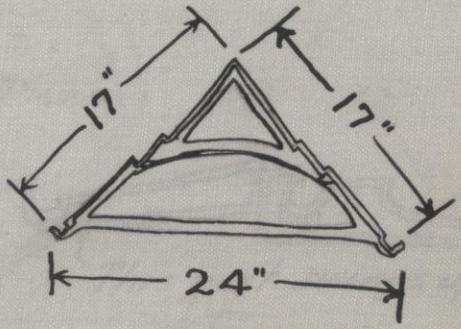

No. 38 Monotype Cabinet Bracket.

PATTERN NO. 38

SEE B. P. NO.

No Drawing.

THE HAMILTON MFG. CO.

DONT REMOVE THIS LEAF FROM BOOK

NG



This part swings up.

No. 37 Monotype Cabinet Bracket.

PATTERN NO. 37

SEE B. P. NO.

No Drawing.

THE HAMILTON MFG. CO.

DON'T REMOVE THIS LEAF FROM BOOK

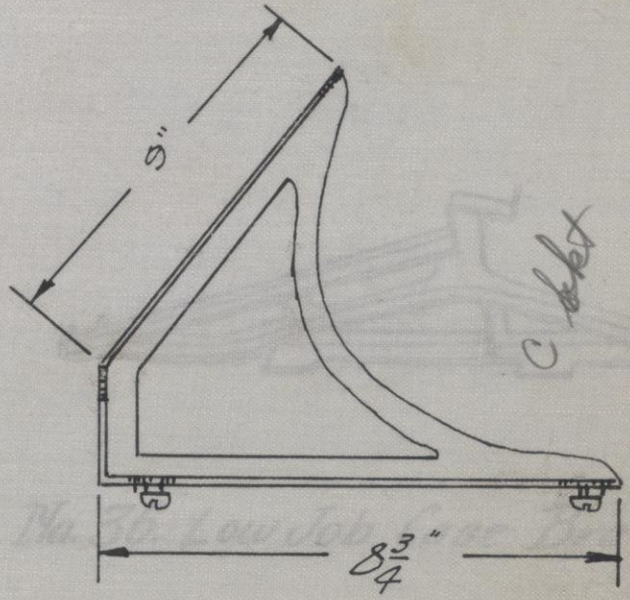

PATTERN NO.

SEE B. P. NO.

THE HAMILTON MFG. CO.

DONT REMOVE THIS LEAF FROM BOOK

NG

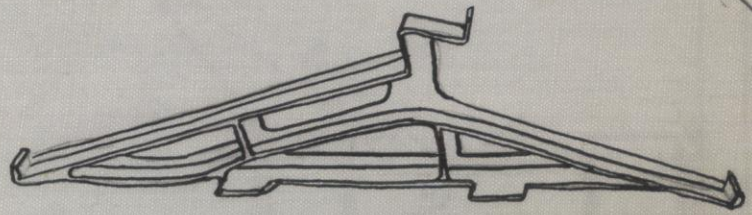

No. 36. Low Job Case Bracket.

PATTERN NO. 36 L

" " 36 R

SEE B. P. NO.

No Drawing

THE HAMILTON MFG. CO.

DON'T REMOVE THIS LEAF FROM BOOK

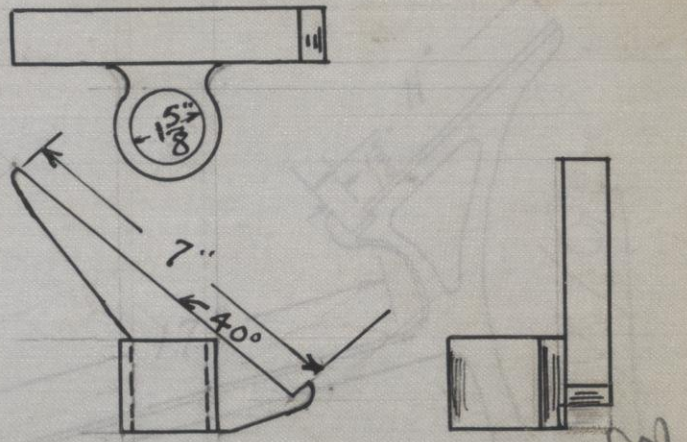

move in Stock

NB

PATTERN NO.

SEE B. P. NO.

THE HAMILTON MFG. CO.

DON'T REMOVE THIS LEAF FROM BOOK

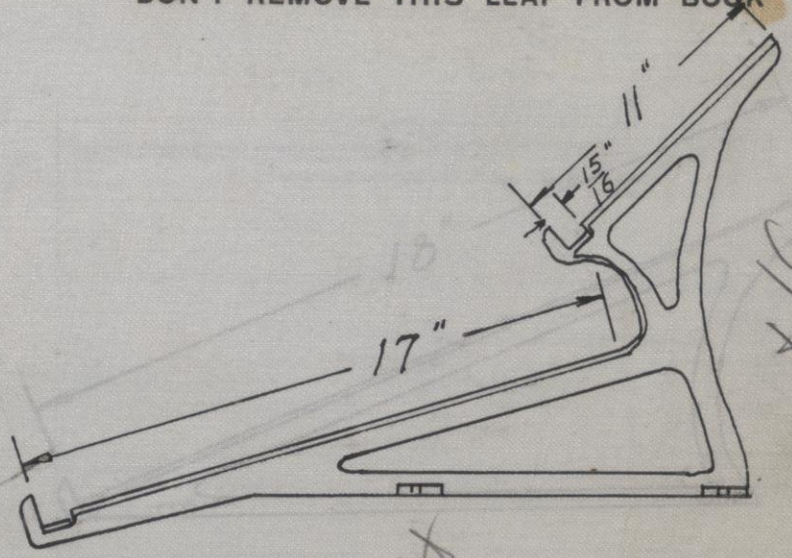

36 in stock

PATTERN NO. 34

SEE B. P. NO.

THE HAMILTON MFG. CO.

DON'T REMOVE THIS LEAF FROM BOOK

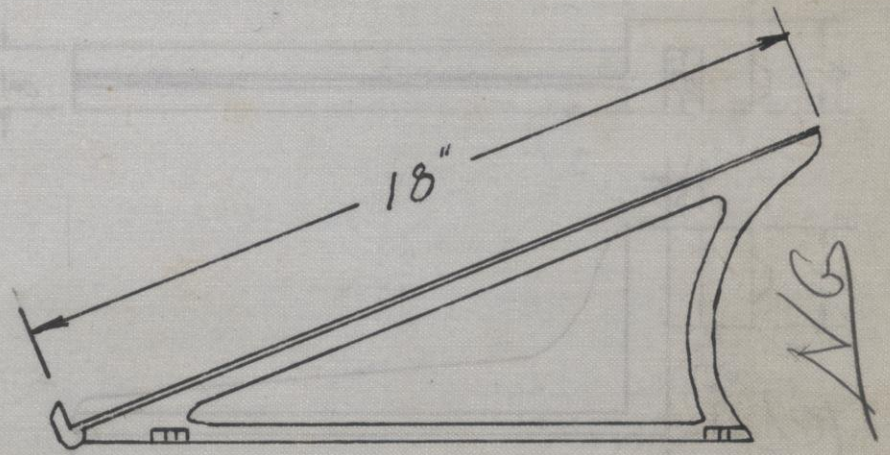

NG

SEE B. P. NO.

PATTERN NO.

THE HAMILTON MFG. CO.

DON'T REMOVE THIS LEAF FROM BOOK

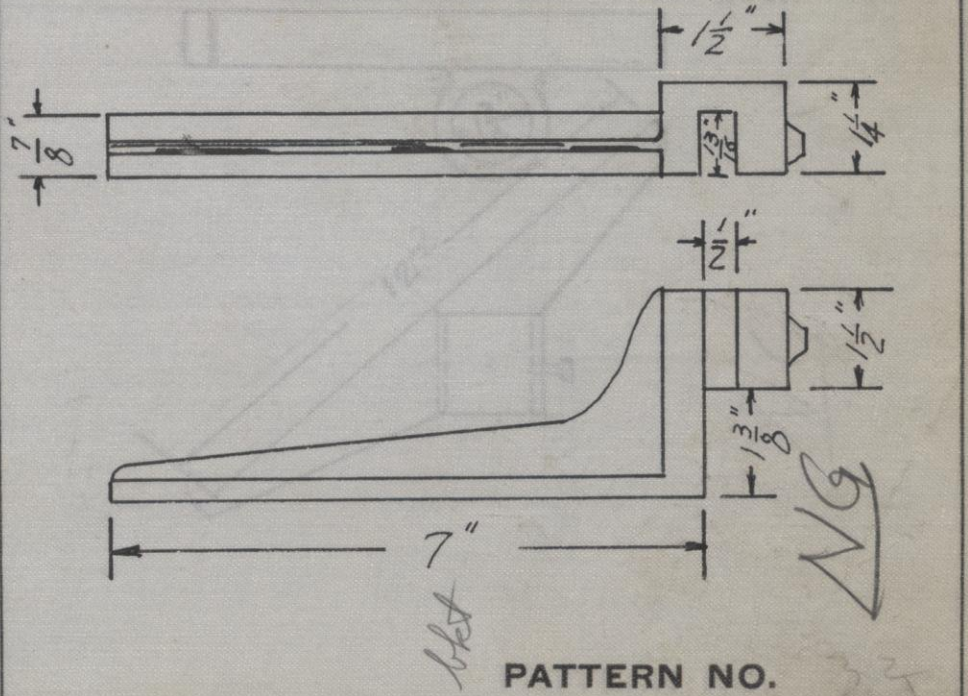

NG

PATTERN NO.

SEE B. P. NO.

THE HAMILTON MFG. CO.

DON'T REMOVE THIS LEAF FROM BOOK

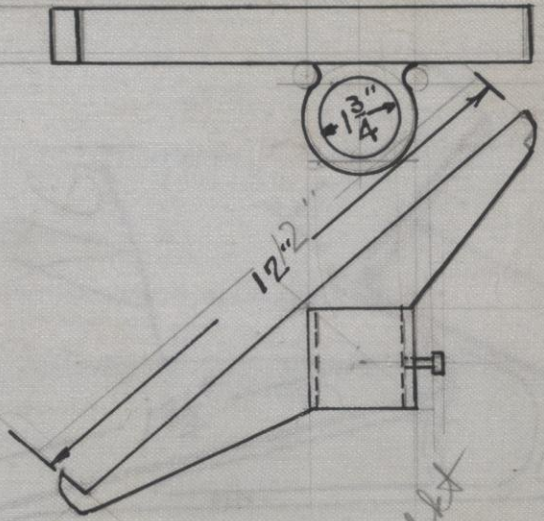

PATTERN NO. 31

SEE B. P. NO.

THE HAMILTON MFG. CO.

DON'T REMOVE THIS LEAF FROM BOOK

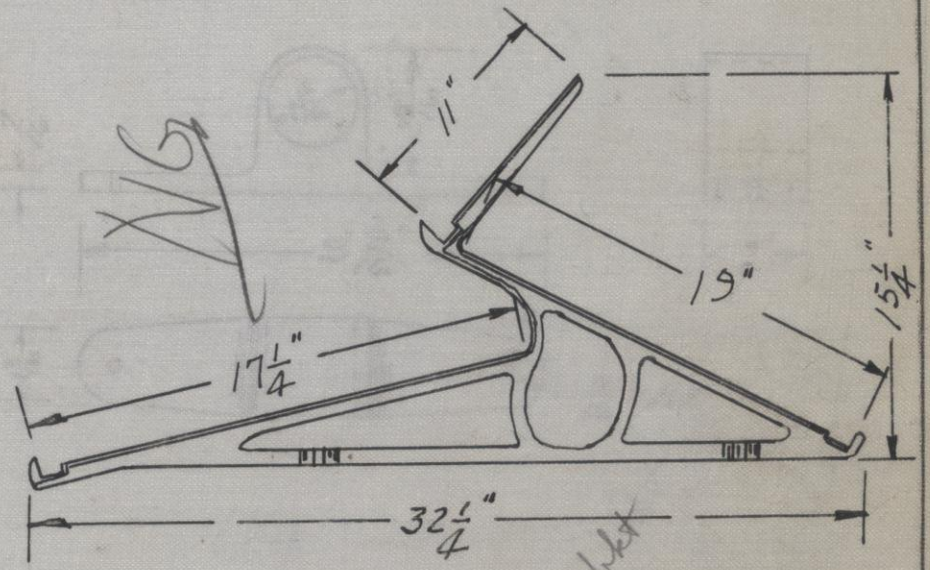

PATTERN NO. 31

SEE B. P. NO.

THE HAMILTON MFG. CO.

DON'T REMOVE THIS LEAF FROM BOOK

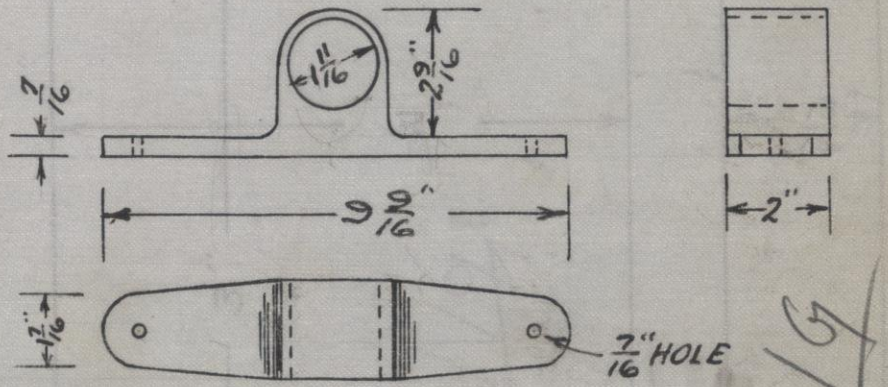

none in Stock

1 1/4" Pipe bkt

NG

PATTERN NO.

SEE B. P. NO.

30

THE HAMILTON MFG. CO.

DON'T REMOVE THIS LEAF FROM BOOK

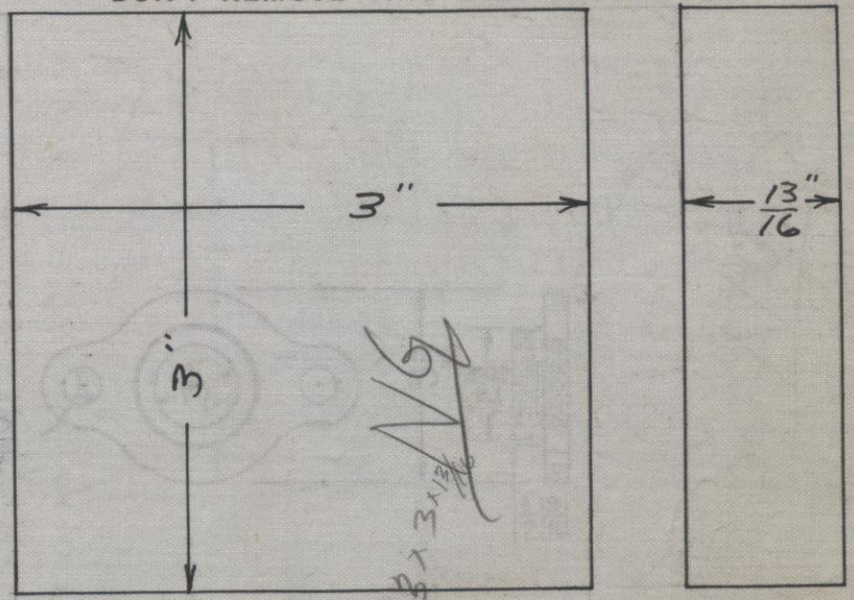

Plate 3/8 x 3 x 13/16

SEE B. P. NO.

PATTERN NO. 29

24 in Stock

THE HAMILTON MFG. CO.

DON'T REMOVE THIS LEAF FROM BOOK

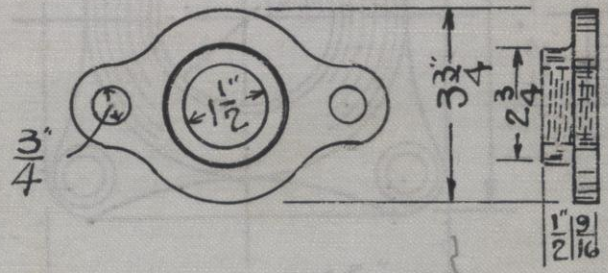

Flange

NG

PATTERN NO.

SEE B. P. NO.

THE HAMILTON MFG. CO.

DON'T REMOVE THIS LEAF FROM BOOK

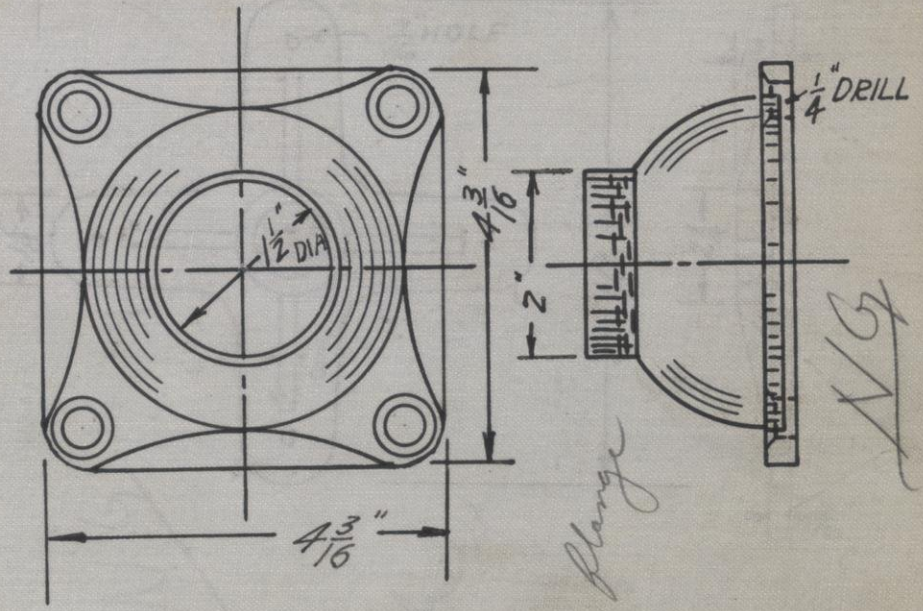

PATTERN NO. 27

SEE B. P. NO.

THE HAMILTON MFG. CO.

DON'T REMOVE THIS LEAF FROM BOOK

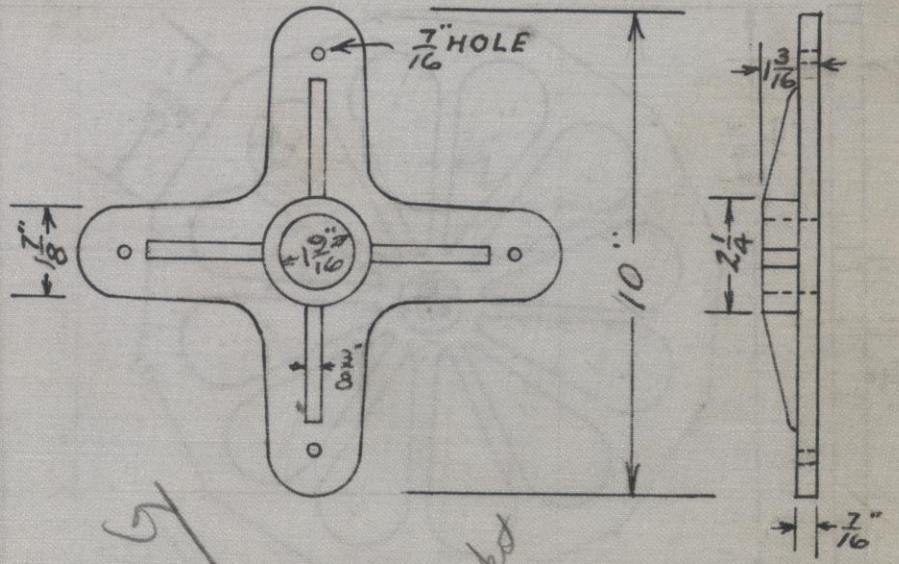

SEE B. P. NO.

PATTERN NO.

THE HAMILTON MFG. CO.

DON'T REMOVE THIS LEAF FROM BOOK

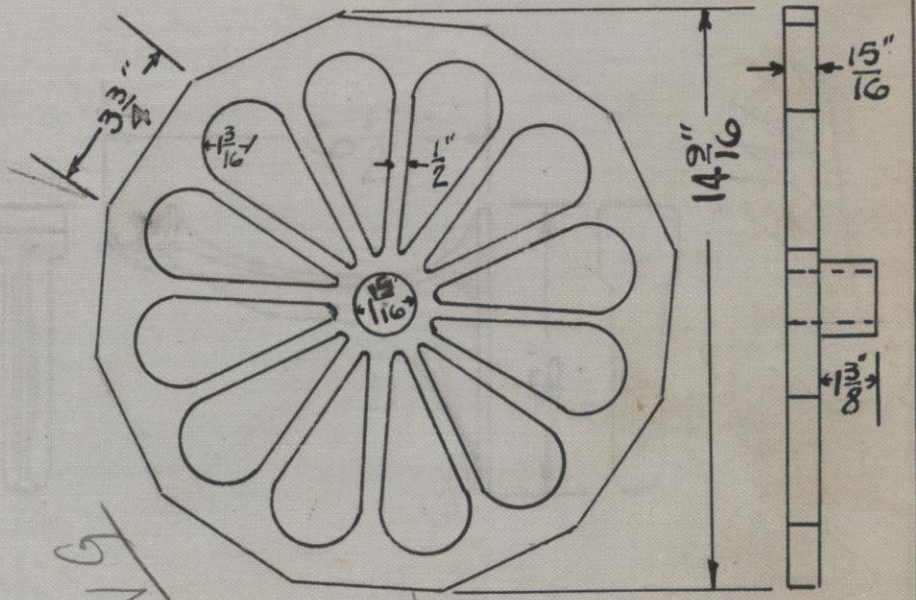

None in Stock

PATTERN NO.

SEE B. P. NO.

THE HAMILTON MFG. CO.

DON'T REMOVE THIS LEAF FROM BOOK

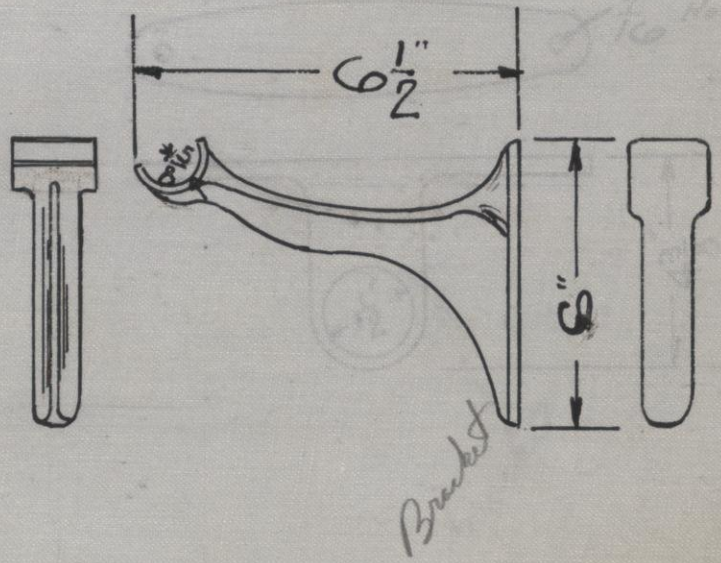

None in Stock

NG

PATTERN NO. 24

SEE B. P. NO.

THE HAMILTON MFG. CO.

DON'T REMOVE THIS LEAF FROM BOOK

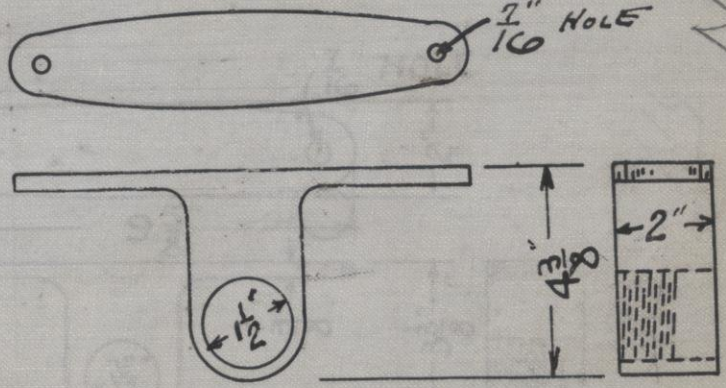

NG

Bracket

PATTERN NO.

SEE B. P. NO.

THE HAMILTON MFG. CO.

DON'T REMOVE THIS LEAF FROM BOOK

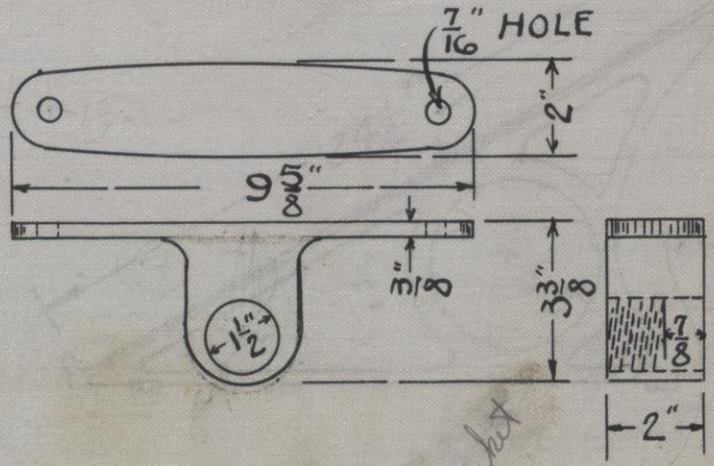

none in Stock

NG

bracket

PATTERN NO.

SEE B. P. NO.

THE HAMILTON MFG. CO.

DON'T REMOVE THIS LEAF FROM BOOK

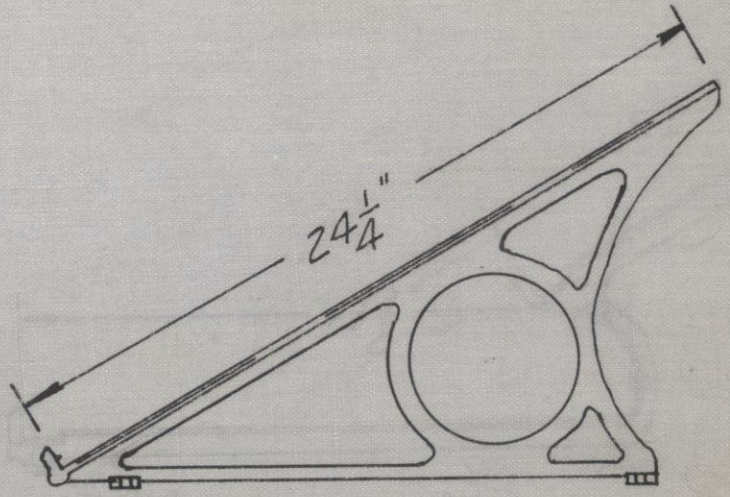

move in stock

NG

C Bucket

PATTERN NO. TS 20

SEE B. P. NO.

THE HAMILTON MFG. CO.

DON'T REMOVE THIS LEAF FROM BOOK

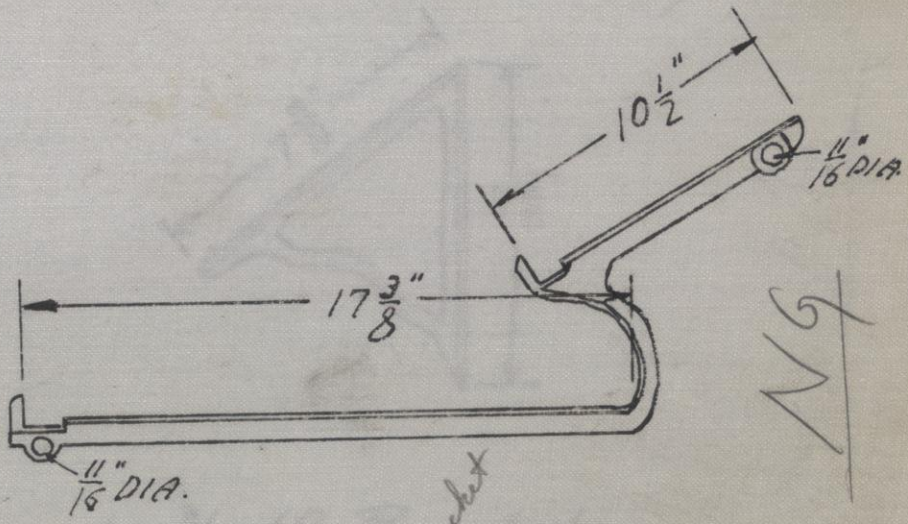

50 in stock

a bracket

NG

PATTERN NO. 19

SEE B. P. NO.

THE HAMILTON MFG. CO.

DONT REMOVE THIS LEAF FROM BOOK

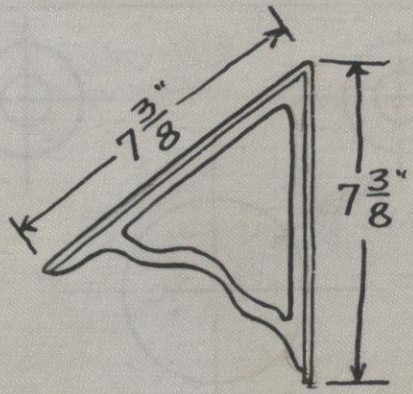

NG

No. 19 Bracket.

PATTERN NO. 19

SEE B. P. NO.

No Drawing

THE HAMILTON MFG. CO.

DON'T REMOVE THIS LEAF FROM BOOK

NG

move in block

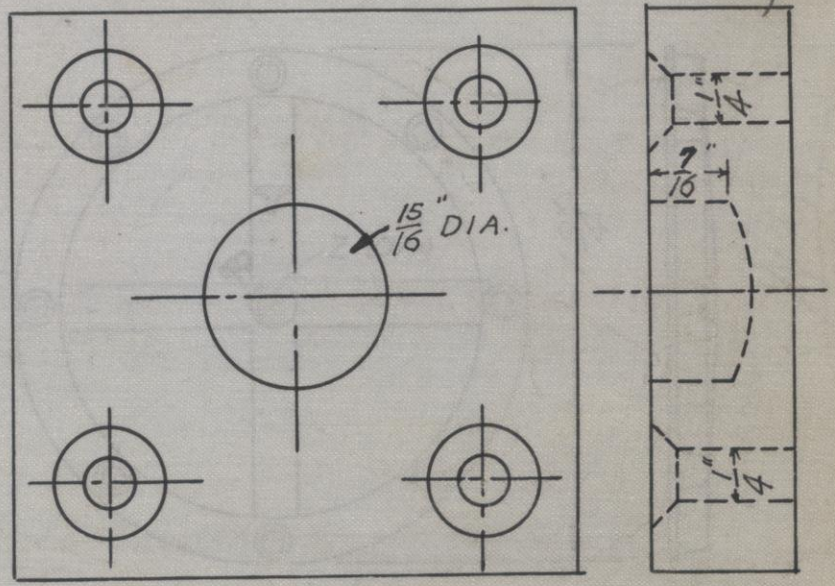

plate

SEE B. P. NO.

PATTERN NO.

14

THE HAMILTON MFG. CO.

DON'T REMOVE THIS LEAF FROM BOOK

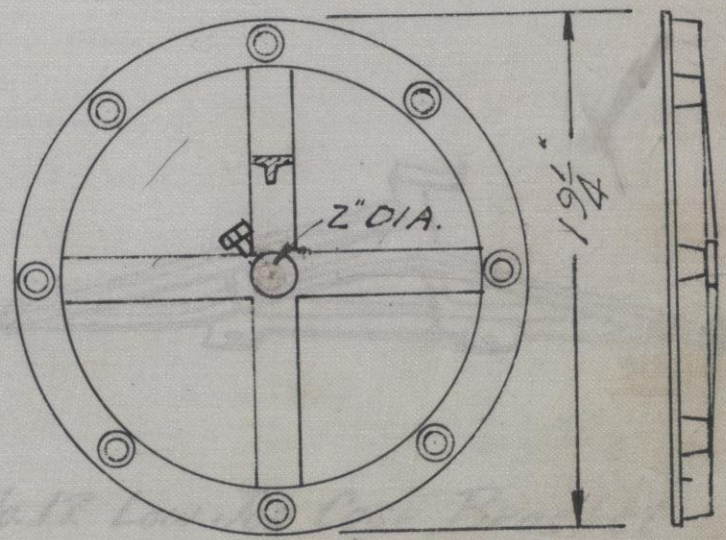

NG

PATTERN NO. 19

SEE B. P. NO. roller bracket

none in Stock

THE HAMILTON MFG. CO.

DONT REMOVE THIS LEAF FROM BOOK

NG

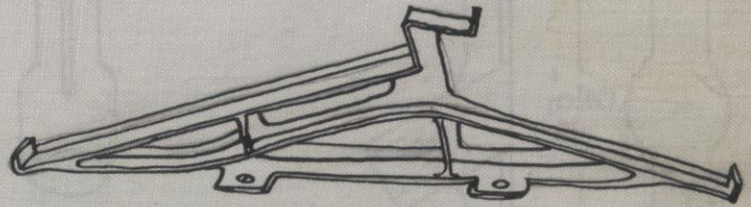

No. 17. Low Job Case Bracket

PATTERN NO. 17 L

SEE B. P. NO. " " 17 R

No Drawing.

THE HAMILTON MFG. CO.

DON'T REMOVE THIS LEAF FROM BOOK

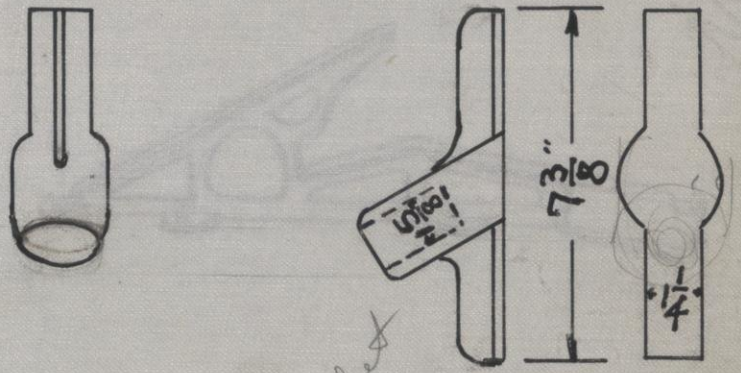

PATTERN NO. 16

SEE B. P. NO.

THE HAMILTON MFG. CO.

DONT REMOVE THIS LEAF FROM BOOK

NG

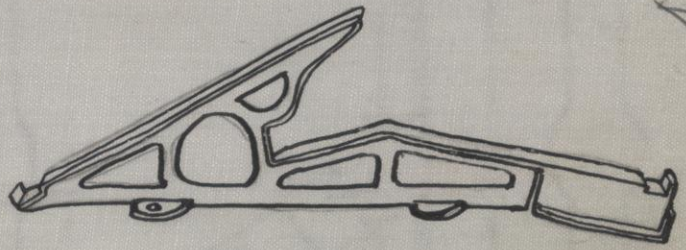

No. 16. Low Job Case Bracket.

PATTERN NO. 16 L

SEE B. P. NO. " " 16 R

No Drawing.

THE HAMILTON MFG. CO.

DON'T REMOVE THIS LEAF FROM BOOK

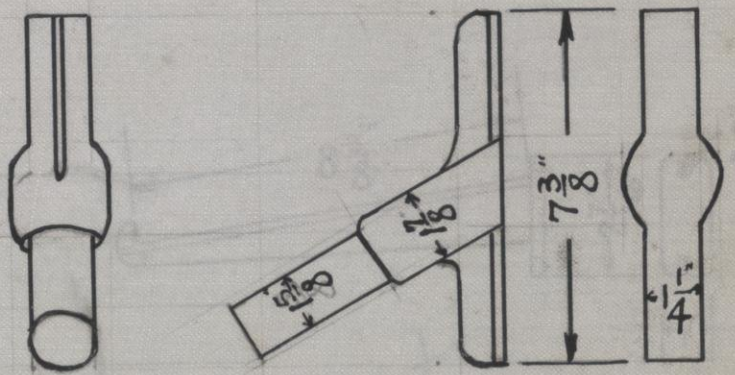

NG

Bracket

PATTERN NO. 15

SEE B. P. NO.

more in stock

THE HAMILTON MFG. CO.

DON'T REMOVE THIS LEAF FROM BOOK

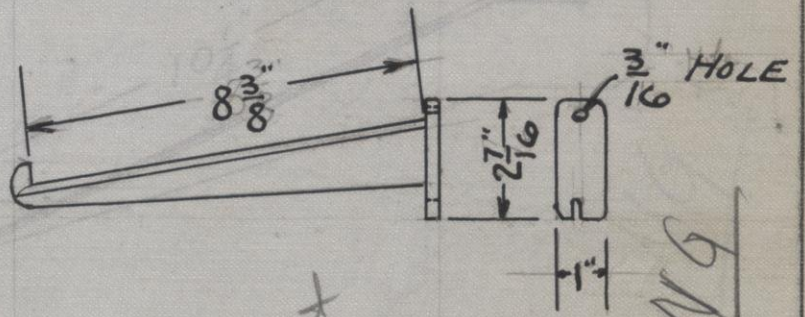

C bracket

PATTERN NO. 14

SEE B. P. NO.

THE HAMILTON MFG. CO.

DON'T REMOVE THIS LEAF FROM BOOK

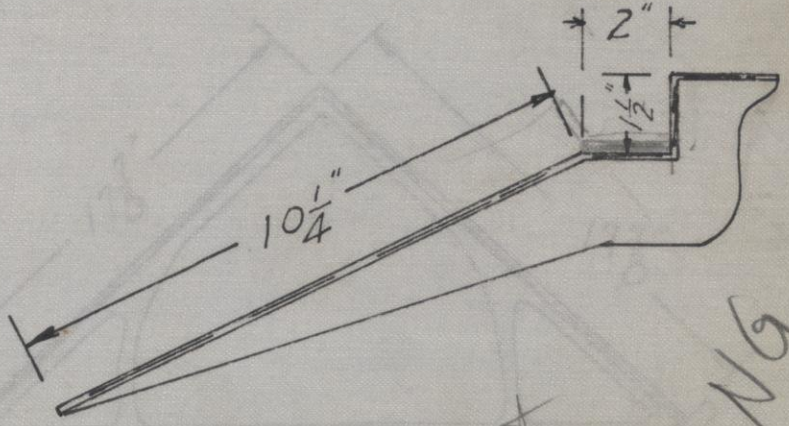

C. Bracket

NG

PATTERN NO. 13

SEE B. P. NO.

THE HAMILTON MFG. CO.

DON'T REMOVE THIS LEAF FROM BOOK

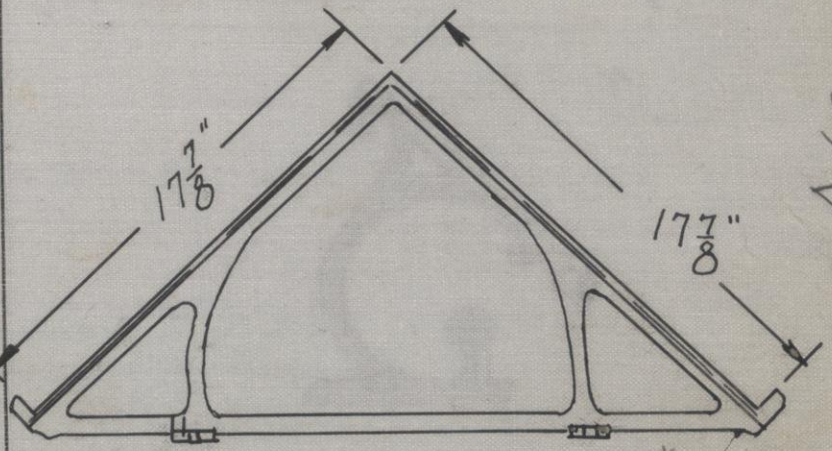

C bracket

NG

PATTERN NO. 12

SEE B. P. NO.

THE HAMILTON MFG. CO.

DONT REMOVE THIS LEAF FROM BOOK

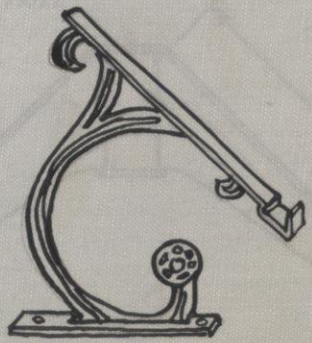

No. 12 Single Autocrat Case Bracket.

PATTERN NO. 12

SEE B. P. NO.

No Drawing

THE HAMILTON MFG. CO.

DON'T REMOVE THIS LEAF FROM BOOK

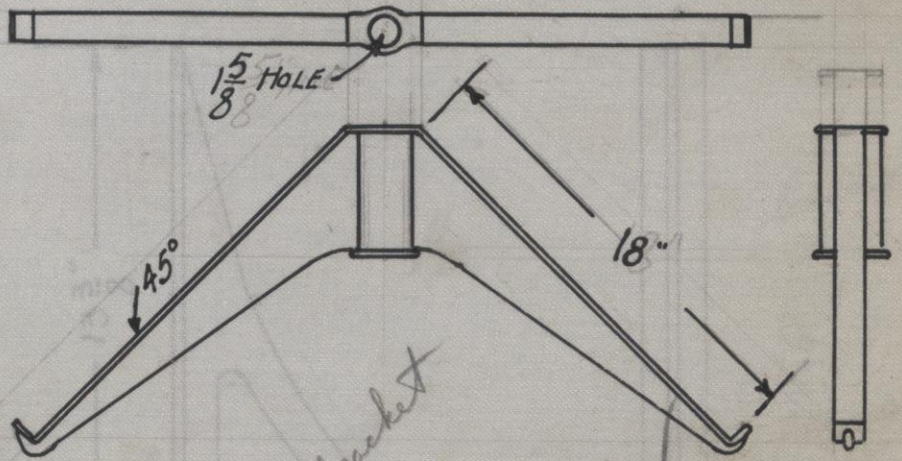

move in Torch

Back Bracket

NG

PATTERN NO. 11

SEE B. P. NO.

THE HAMILTON MFG. CO.

DON'T REMOVE THIS LEAF FROM BOOK

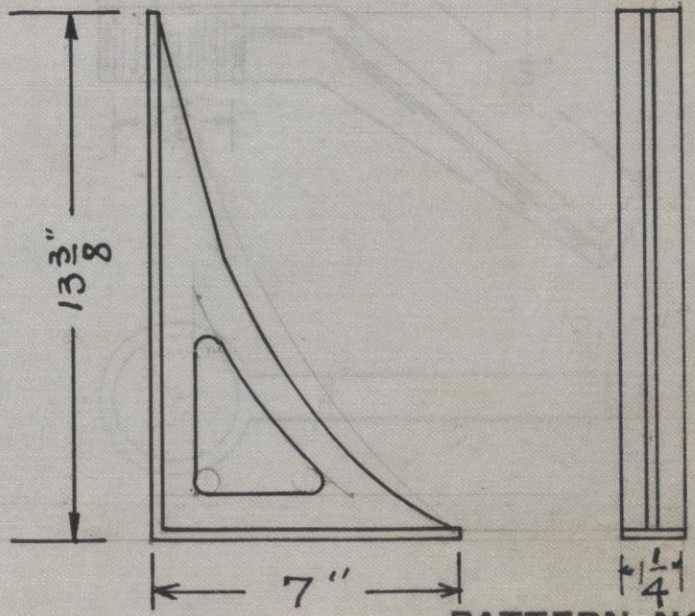

PATTERN NO. 10

SEE B. P. NO.

more in stock

bracket

VG

THE HAMILTON MFG. CO.

DON'T REMOVE THIS LEAF FROM BOOK

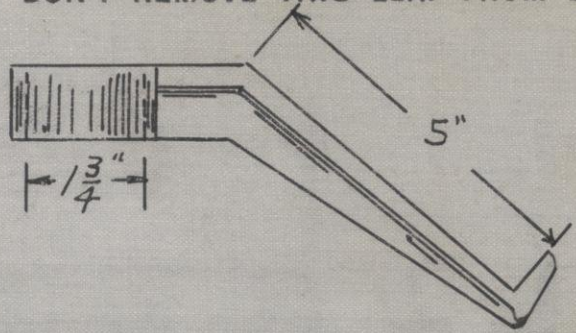

NG

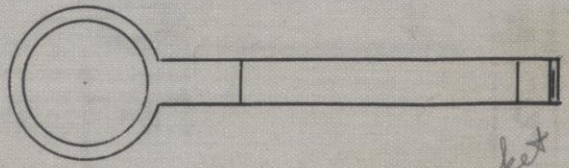

rear bracket

PATTERN NO. 9

SEE B. P. NO.

more in stock

THE HAMILTON MFG. CO.

DON'T REMOVE THIS LEAF FROM BOOK

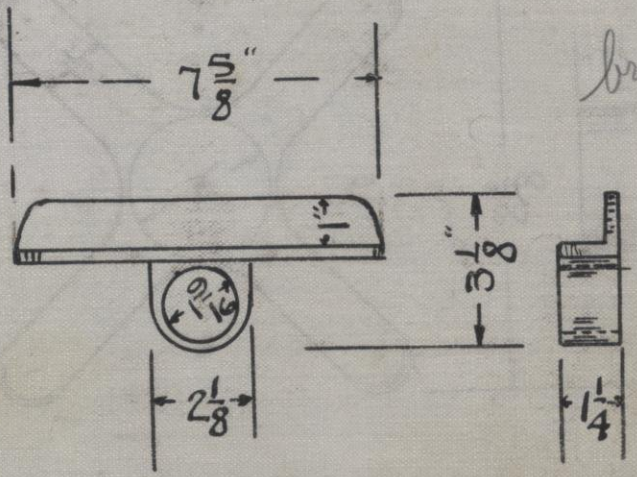

bracket

PATTERN NO. 7

SEE B. P. NO.

THE HAMILTON MFG. CO.

DON'T REMOVE THIS LEAF FROM BOOK

Spider

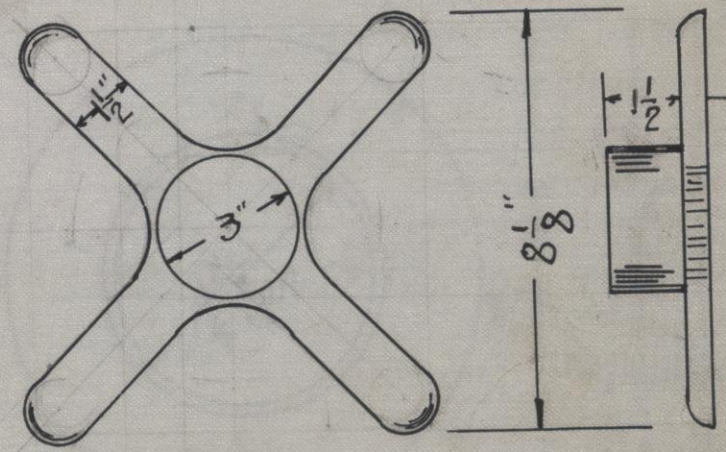

PATTERN NO. 6

SEE B. P. NO.

THE HAMILTON MFG. CO.

DON'T REMOVE THIS LEAF FROM BOOK

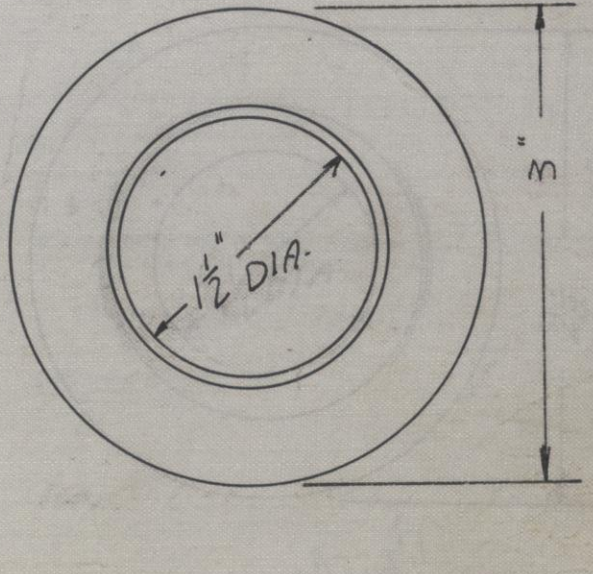

flange

NG

5

PATTERN NO.

SEE B. P. NO.

THE HAMILTON MFG. CO.

DON'T REMOVE THIS LEAF FROM BOOK

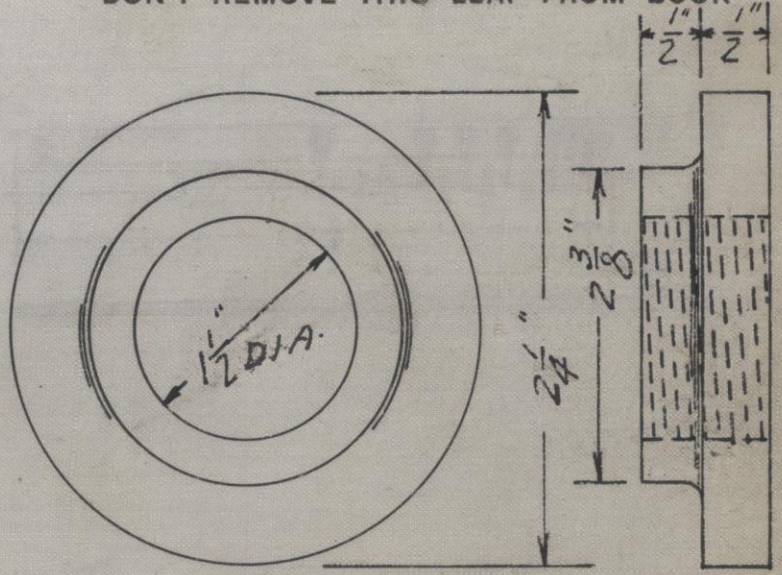

move in Stock

Flanges

SEE B. P. NO.

PATTERN NO. 4

THE HAMILTON MFG. CO.

DON'T REMOVE THIS LEAF FROM BOOK

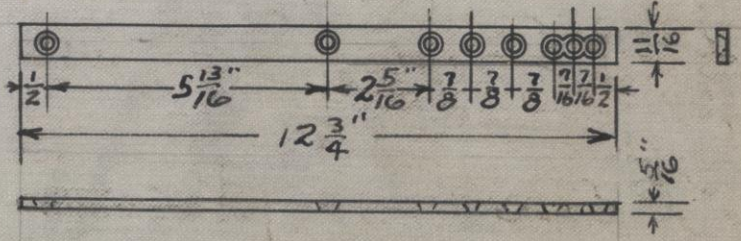

PATTERN NO. 3

SEE B. P. NO.

THE HAMILTON MFG. CO.

DON'T REMOVE THIS LEAF FROM BOOK

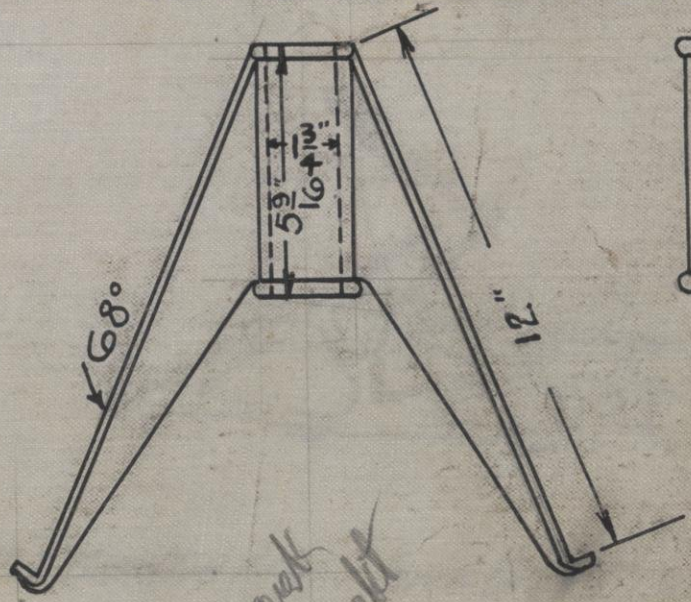

PATTERN NO.

SEE B. P. NO.

THE HAMILTON MFG. CO.

DONT REMOVE THIS LEAF FROM BOOK

NG

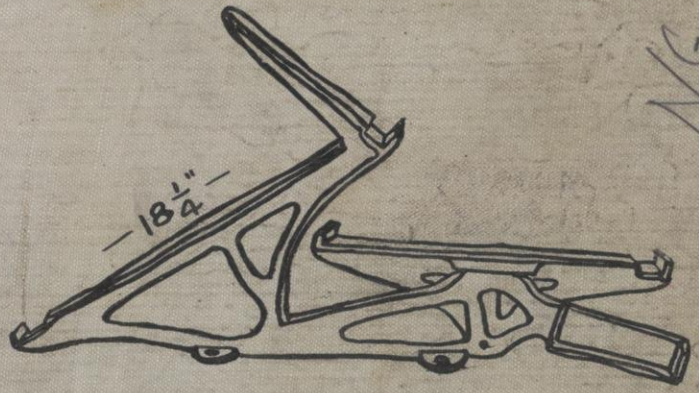

No. 2. Hamilton Patent Three-Case Tilting Bracket.

PATTERN NO. 2R

" " 2L

SEE B. P. NO.
NB Drawing

THE HAMILTON MFG. CO.

DON'T REMOVE THIS LEAF FROM BOOK

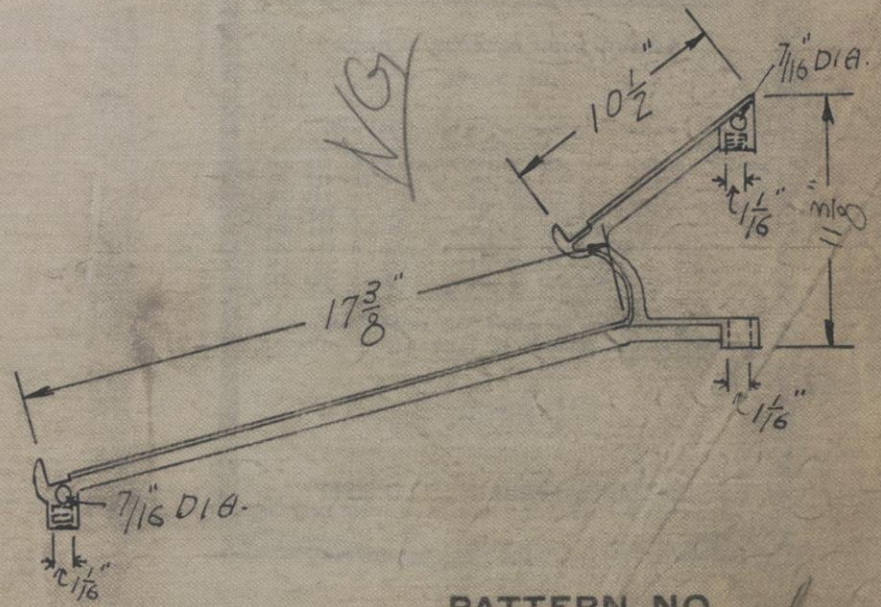

PATTERN NO.

SEE B. P. NO.

Cesco LOOSE LEAF **Binders**

HUDSON SLOTTED LOCK BINDER

STYLE "HL"

THE FOLLOWING SIZES CARRIED IN STOCK:

☐	HL 117	5½x 8½	2¾	☐	HL 136	8½x11	2¾
☐	HL 119	5½x11	2¾	☐	HL 113	8½x14	4¼
☐	HL 111	6 x 9½	2¾	☐	HL 101	9½x12	4¼
☐	HL 148	6 x12	2¾	☐	HL 114	11 x8½	7
☐	HL 141	7 x8½	4¼	☐	HL 138	11 x8½	4¼
☐	HL 149	8 x9½	4¼	☐	HL 115	12 x 9½	7
☐	HL 112	7 x11	4¼	☐	HL 139	14 x 8½	7
☐	HL 100	8½x11	4¼	☐	HL 116	17 x11	7

Stock Sizes Are Indicated by a Star.
Re-order Special Sizes by Number Shown Below:

NO. 78147

THE C. E. SHEPPARD CO.
Loose Leaf Binders and Forms — Long Island City, N. Y.