Preliminary project description: Crandon Project. October 1980

Exxon Minerals Company

[s.l.]: Exxon Minerals Company, October 1980

REPORT

PRELIMINARY PROJECT DESCRIPTION

CRANDON PROJECT

prepared for

Wisconsin Department of Natural Resources

EXXON MINERALS COMPANY

PRELIMINARY PROJECT DESCRIPTION
CRANDON PROJECT

prepared for
Wisconsin Department of Natural Resources

by
Exxon Minerals Company

October 1980

PREFACE

This document is submitted by Exxon Minerals Company (Exxon) to the Wisconsin Department of Natural Resources (DNR) in fulfillment of the requirements presented in proposed NR 132.05(2)(e), Wisconsin Administrative Code (DNR draft of proposed Chapter NR 132 Metallic Mineral Mining, September 17, 1980).

The "Preliminary Project Description" reflects the status of the Crandon Project through September 1980, and is being distributed publically.

Many documents and specific reports concerning the Crandon Project have been made available to the public. A complete set of these public submittals can be found in any of the following libraries:

- Crandon Public Library;
- Rhinelander Public Library;
- Antigo Public Library; and
- Nicolet College Library.

EXXON MINERALS COMPANY
CRANDON PROJECT

PRELIMINARY DESCRIPTION

	Author: J. A. DeMarte
Section:	Checked:
Date: 10/1/80	Approved:

TABLE OF CONTENTS

LIST OF FIGURES

LIST OF FIGURES (continued)

LIST OF FIGURES (continued)

EXXON MINERALS COMPANY
CRANDON PROJECT

PRELIMINARY DESCRIPTION

Section: 1.0
Date: 10/1/80
Author: J. A. DeMarte
Checked:
Approved:

1.0 INTRODUCTION

The information presented in this report reflects the current plans of Exxon Minerals Company, a division of Exxon Corporation (Exxon), for developing and operating the Crandon Project. This report is based upon the current status of ongoing studies and data available at this time. Some changes can be expected between this submittal and submittal of the Environmental Impact Report for the Crandon Project. This report describes processes, such as underground mining, milling and construction of waste disposal installations that employ standard well-proven engineering techniques used successfully by mining companies throughout North America. This report is preliminary and does not necessarily state the preferred action to be ultimately presented by Exxon.

Contained in the Preliminary Project Description is a presentation of the Project overview which includes a brief history of the Crandon orebody discovery and its geographic location. A general construction schedule is provided which illustrates Project plans projected over a five year period. This report describes the projected manpower requirements for the construction and operational phases of the Project.

General descriptive information is provided on the underground mine facilities, mine/mill surface facilities, concentrator process, waste disposal facilities, and potential effluents and emissions. For the convenience of the reader a glossary of technical terms is also provided along with detailed topographic maps showing possible locations of some of the surface facilities.

2.0 PROJECT OVERVIEW

2.1 History

In the course of exploration for base metal deposits in northern Wisconsin, an aerial electromagnetic geophysical anomaly was found near Crandon in Forest County during 1974. This was verified by collecting and interpreting ground survey data. Exxon began drilling this anomaly in the summer of 1975. The first diamond drill hole returned significant mineralization containing zinc and copper. Subsequent drilling confirmed the discovery of a sizable zinc-copper deposit. From 1975 until 1978, about 200 diamond drill holes were completed, some as deep as 760 meters (2500 feet). This drilling effort basically outlined the physical limits and determined the quality of the zinc-copper mineralization. An extensive program of pre-development and mine planning activities has been conducted by Exxon Minerals Company since that time.

2.2 Location

The deposit is located in the Northern Highlands region of northeastern Wisconsin. Crandon, the county seat of Forest County, is located 8 kilometers (5 miles) due north of the proposed Project site. Other communities in the area include Rhinelander 45 kilometers (28 miles) west, Antigo 72 kilometers (45 miles) south, and Iron Mountain and Iron River, in Michigan, 121 kilometers (75 miles) and 71 kilometers (44 miles) east and north of Crandon respectively (Figure 2.1). The Project site is located 3 kilometers (2 miles) east of State Highway 55 on Sand Lake Road.

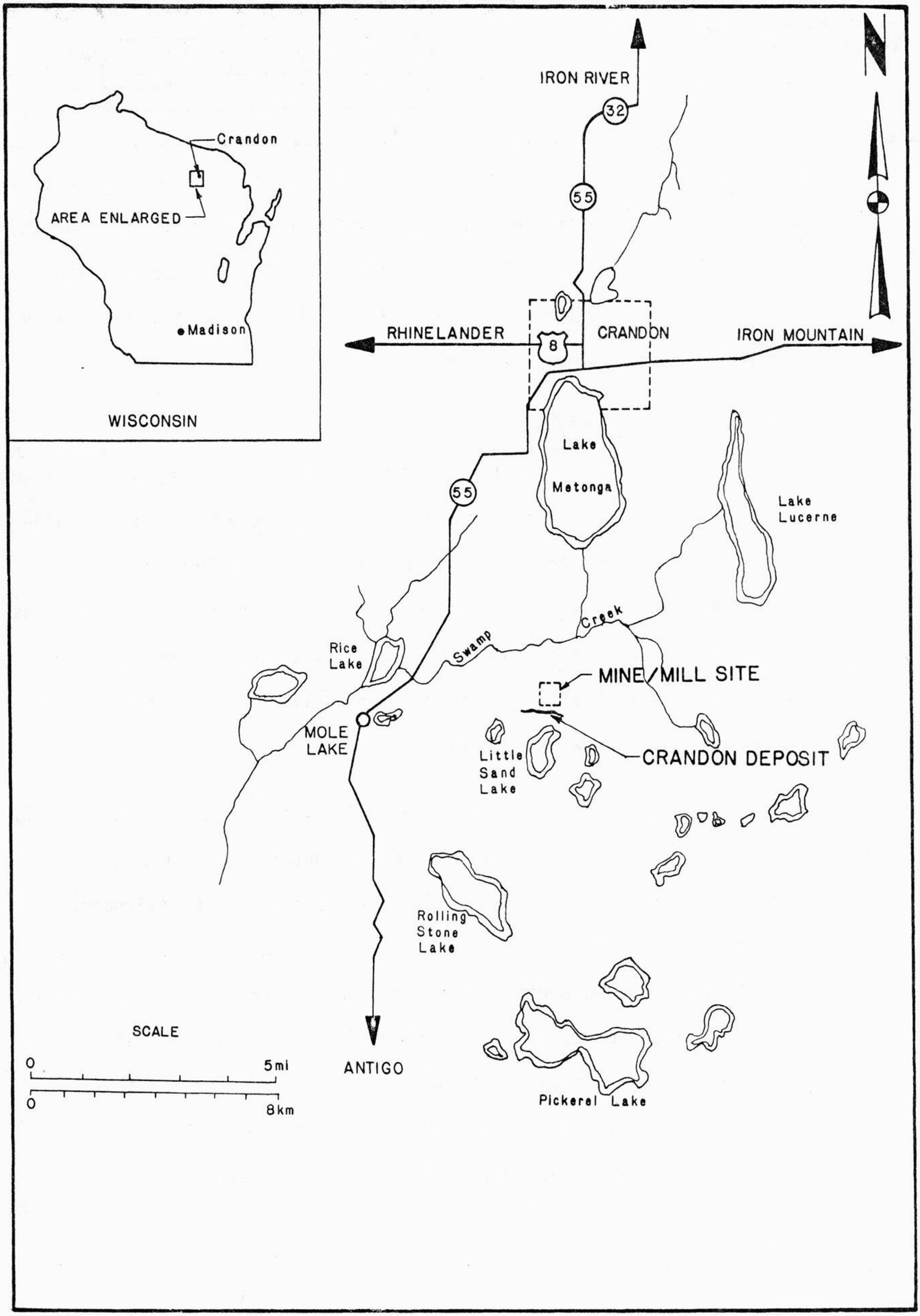

Figure 2.1 -- Geographic location of the Crandon Project and ore deposit

The east-west striking deposit occurs in Section 25, Township 35 North, Range 12 East, Nashville Township, and in Section 30, Township 35 North, Range 13 East, Lincoln Township. Physiographically, the deposit lies 0.4 kilometer (0.25 mile) north of Little Sand Lake, and 1.6 kilometers (1 mile) south of Swamp Creek.

2.3 Ore Reserves and Ore Types

The deposit is about 1520 meters (5,000 feet) long, dips approximately 80 degrees north to vertical, and averages about 38 meters (125 feet) wide and 720 meters (2,330 feet) beneath the surface. Current estimates of the probable tonnage and grade of the deposit are 75 million metric tons (83 million tons) that average 5.0 percent zinc, 1.1 percent copper, 0.4 percent lead. This estimate, based on 200 drill holes, is subject to future updating as new geological data become available.

The deposit contains about equal amounts of two major ore types. The first ore type consists of copper mineralization containing minor amounts of zinc, in a quartz matrix. This copper-zinc ore has been designated "stringer ore", because of the occurrence of stringers or veinlets that consist of quartz and pyrite (FeS_2) with smaller amounts of chalcopyrite ($CuFeS_2$) and sphalerite (ZnS). Some of the sulfide mineralization occurs as disseminated grains and blebs within the silicified volcanic rock matrix. Overlapping the stringer ore and extending to the east is the other type which is termed "massive ore" (zinc-copper-lead).

This zinc-copper-lead ore consists mostly of sphalerite, with chalcopyrite and minor amounts of galena (PbS), all within a matrix that is mostly pyrite. The massive and stringer ore types occur either in contact with, or separated from one another by a narrow zone of waste rock, and therefore, can be readily mined and treated separately.

2.4 Operational Period and Production Rates

Current tonnage estimates indicate that the orebody, assuming 75 million metric tons (83 million tons), can sustain a 30 year plus mine operation at an annual production rate of 3.2 million metric tons (3.5 million tons). Mine construction and initial production will add another 4 to 6 years to the anticipated total life of the operation.

Under this base case, ore would be mined underground and hoisted to the surface at a daily rate of approximately 12 700 metric tons (14,000 tons) five days a week. Processing of the ore will occur in the mill with a capacity of 9 100 metric tons (10,000 tons) per day. The mill would maintain a 24-hour, seven day a week schedule. Zinc, copper, and lead concentrates will be produced and shipped for smelting and refining.

3.0 SCHEDULE

A mine/mill facility the size and type of the Crandon Project normally requires 4 to 5 years to develop and start initial production of concentrates. An additional 4 to 5 years are then required to reach full production.

The starting point for the development and construction schedule is dependent upon the date when Exxon receives all required government permits and corporate approval to commence construction. A condensed construction schedule for the proposed Crandon Project is presented in Figure 3.1.

Site preparation and construction of the access road, railroad, electrical power line, and the surface facilities for support of the underground mine development will be started first. Shortly thereafter, work will start on sinking of the main production and ventilation shafts, followed by development of the underground mine workings and erection of the mine hoist headframe.

On the surface, work will commence on constructing the mine/mill and ancillary facilities, and the waste disposal facilities. As the buildings are constructed, equipment will be installed, tested, and prepared for production of concentrates.

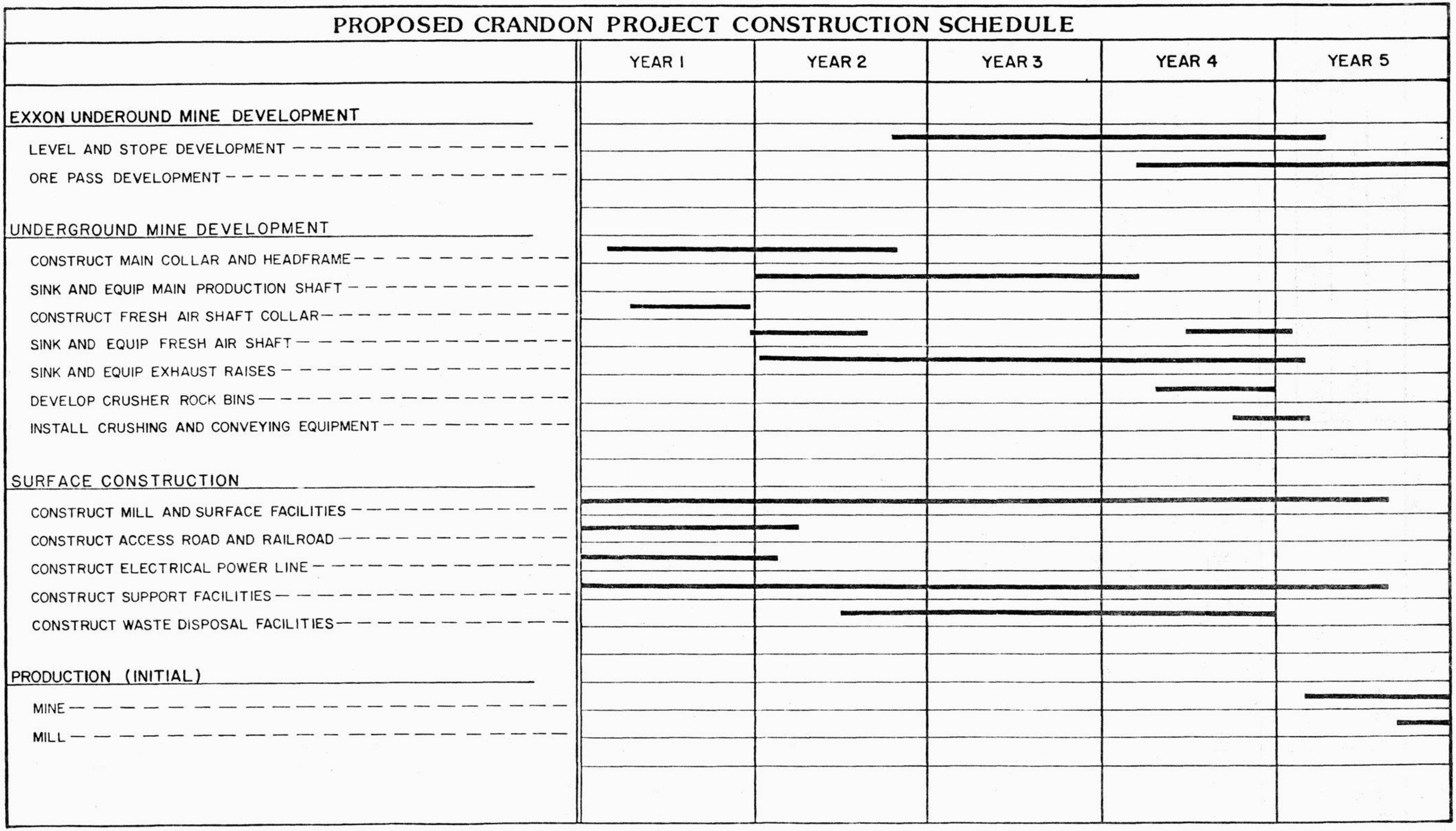

Figure 3.1 -- Condensed construction schedule for the proposed Crandon mine and mill project.

EXXON MINERALS COMPANY CRANDON PROJECT		Author: R. A. Ford
	Section: 4.0	Checked:
PRELIMINARY DESCRIPTION	Date: 10/1/80	Approved:

4.0 PROJECTED MANPOWER REQUIREMENTS

Manpower requirements for the proposed Crandon Project are described for the three phases of the Project development; surface construction activities, initial mine development, and operations.

The surface facilities required for mining, milling, and waste disposal will be built primarily by specialized contractors. These contractors normally supply their own labor with some portion expected to be hired locally. Levels of employment will vary during the 4 year construction period as the major facilities are completed.

Initial mine level development and construction of major underground facilities will occur concurrently with the surface construction. These activities also have a term of 4 years, determined primarily by the time required to develop the main production shaft and the associated ore handling facilities. During this period, specialized contractors will be employed for shaft sinking and installation of major underground equipment such as the crusher and conveying system. However, the major portion of the mine level development will be performed by permanent Exxon employees hired and trained at a fairly constant rate over the 4 year period. Approximately 60 Exxon employees will be required at the start of mine development, with a gradual escalation to about 775 by the time production begins 4 years later.

Once mine and mill operations begin, contract labor will no longer be required, and permanent Exxon labor will increase from about 775 to approximately 900 at rated mine/mill capacity. Some construction employees can be retained to operate the mine facilities. This level of employment is expected to be sustained throughout the operating life of the property.

Exxon very strongly wants to utilize local people, including local Native Americans, in filling many of its manpower needs at the Crandon operation. One of Exxon's biggest concerns is that there will be a shortage of individuals from the local area who are available for the Crandon Project. However, to the extent local people are available, and to the extent allowed by law, it will be Exxon's practice to hire preferentially local individuals among equally qualified candidates.

Because of the anticipated shortage of needed skills in the local population, Exxon will provide comprehensive training programs to supply such job skills. Institutions such as Nicolet College and area high schools can also be involved in such programs. In addition, Exxon will conduct extensive on-site safety and skills training.

It will be necessary to continue to recruit a nucleus of managers, supervisors, and technical staff for the project from within Exxon and from the mining industry to fill certain key positions to provide for a safe and orderly progression toward full production. However, it is expected that some supervisory and technical positions will be filled by qualified people hired from the local area, with more positions of the type eventually filled by local people through promotion.

Exxon also strongly desires that where contractors are utilized, the contractors will utilize local people in filling as much of its manpower needs as possible without sacrificing safety or performance of contract work according to contract standards. While Exxon realizes that the contract work is of relatively short duration and requires skilled labor for the most part, Exxon nevertheless wants the contractors selected to make a significant effort to employ local people in the performance of the contract work. For this reason, special, strong language encouraging employment of local people, including local Native Americans, will be included in construction contracts.

5.0 UNDERGROUND MINE FACILITIES

5.1 Mining Method and Ore Handling System

5.1.1 Mining Method

The mining method will be sublevel blasthole open stoping with delayed backfilling, utilizing mill tailings as the backfill material. This method involves the simultaneous development and operation of several vertical stope blocks of ore between mine levels. The ore will be blasted using large diameter blastholes 150 millimeter (6 inch), such that the broken rock can be extracted from openings at the base of each stope. The stope block size and production sequence are dictated by design criteria established through rock mechanics and backfill studies. Effective separation of the two ore types is an additional consideration in designing the mining method and ore handling system.

5.1.2 Ore Handling

Ore handling (Figure 5.1) will begin when low profile, diesel powered, rubber-tired, Load/Haul/Dump (LHD) vehicles transport the blasted rock from the drawpoint drifts to strategically located ore passes, feeding a common electric rail haulage network. The electric rail haulage system will be utilized to collect ore from ore passes for delivery to the coarse ore bins located immediately above the crusher. The ore will be directly fed from these bins into a gyratory crusher, and following crushing, conveyed to storage bins located below the crusher. The crushed ore then will be conveyed from these bins to a loading pocket located immediately adjacent to the main shaft. Following

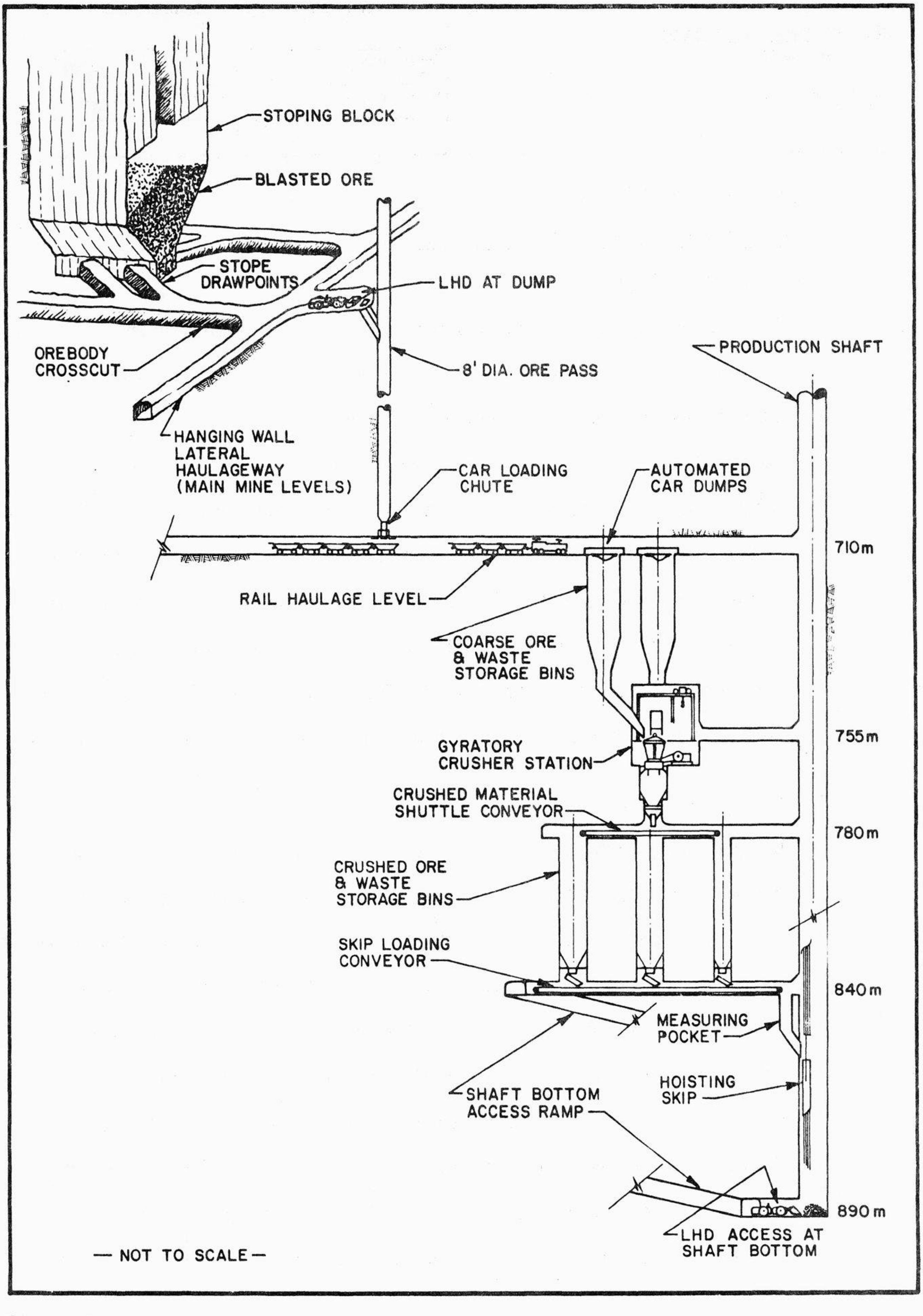

Figure 5.1 -- Underground ore handling schematic designed for the proposed Crandon Mine.

loading into the skips, the ore will be hoisted to the surface and dumped into a skip discharge bin in the headframe. From this bin, the material will be conveyed to a covered ore storage building.

5.2 Facilities and Operations

5.2.1 Headframe

The headframe will be a multiple level, concrete tower, approximately 76 meters (250 feet) in height. The purpose of the headframe is to support the various electric hoists and deflection sheaves that position the hoisting ropes along the centerlines of each of the hoisting compartments. In addition, the headframe will provide sufficient vertical clearance to allow the hoisting skips to dump into the skip discharge bin (Figure 5.2).

The top level of the headframe will accommodate the large electric hoist motors and drums required to operate the conveyance systems within the shaft. The deflection sheaves and an auxiliary cage single-drum floor-mounted hoist will be located beneath the hoist level. Based on current estimates, the largest hoist motor will be about 5,000 kW (6,700 hp). The remaining two lower levels will house the operating console and monitoring instrumentation.

The skip discharge bin will be located between the ground surface and the headframe levels. A service elevator and a stairway system will provide access to the headframe levels. At the base of the headframe, a collar floor will be established to provide access for materials and

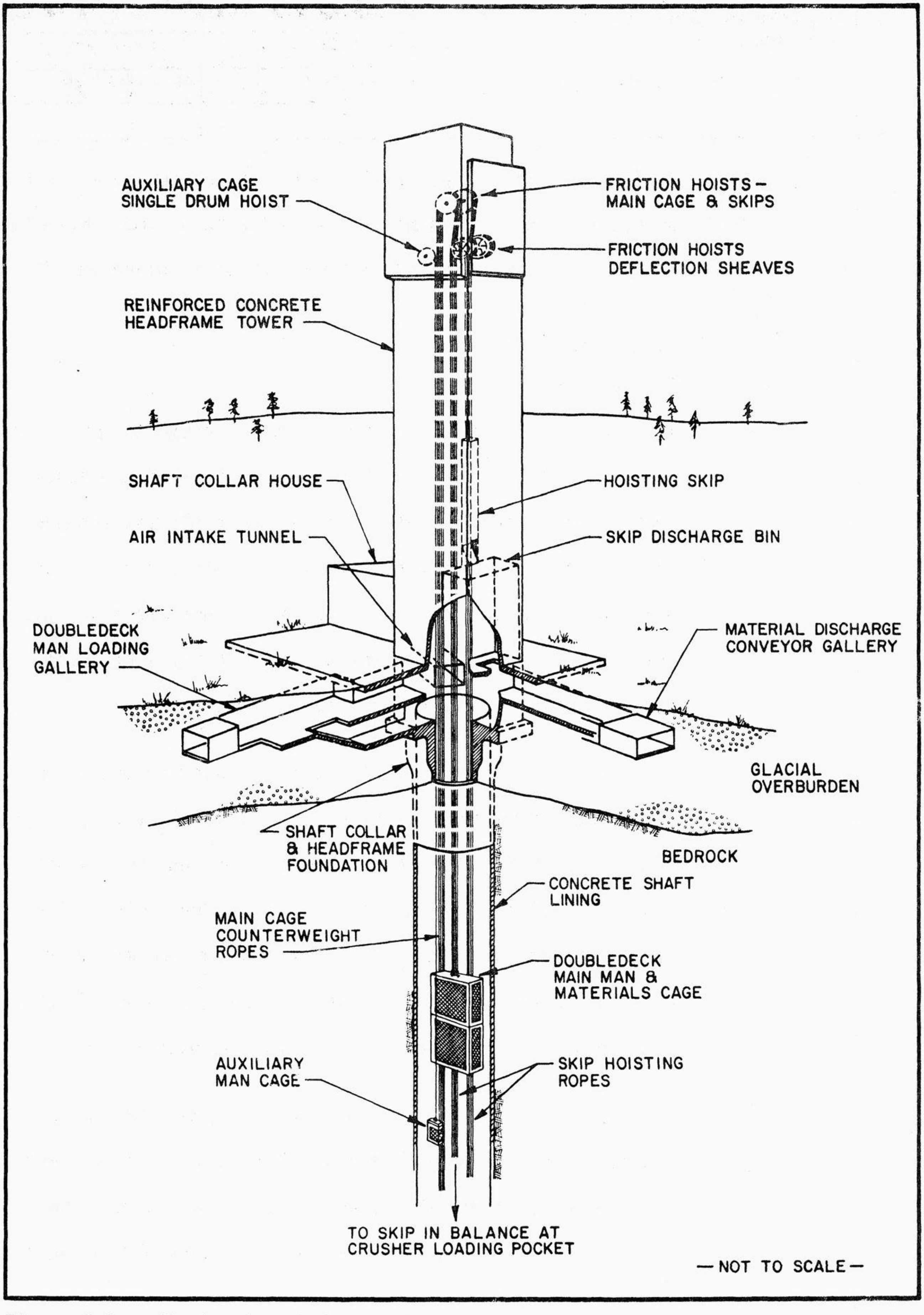

Figure 5.2 -- Production shaft headframe collar and shaft conveyance schematic designed for the proposed Crandon Mine.

equipment. Two additional subcollar floors will be provided for personnel loading, air intake, and access to the conveyor feeder at the base of the skip discharge. The collar will be established through the overburden using ground freezing techniques.

5.2.2 Production Shaft

The production shaft, measuring 7 meters (24 feet) in diameter will provide primary access to the mine. This shaft will be a concrete lined structure sunk to a depth of 884 meters (2,900 feet) using conventional sinking methods. Several conveyances will be installed within the shaft cross-section. The production hoist will be a tower-mounted friction hoist with two skips in balance. The main service hoist will also be a tower-mounted friction hoist, with a counterweighted cage, and will transport both men and material. There also will be an auxiliary service cage capable of transporting a limited number of personnel and small-sized material between mine levels. In addition, a service compartment will be constructed to accommodate electrical, communication, and service lines.

Underground supplementary access will be provided by a 15 to 17 percent decline, or ramp, interconnecting all mine levels. The ramp access will facilitate the movement of personnel, mine equipment, and supplies throughout the mine. This ramp will be designed so that it could be extended to the surface at some future date.

5.2.3 Ventilation

Ventilation requirements are dictated by the anticipated operating diesel horsepower, number of persons underground, dust control provisions, and natural flow resistance of the mine openings. Computer simulation of the Crandon Mine parameters has indicated a fresh air requirement of greater than 34 000 cubic meters (1.2 million cubic feet) of air per minute. Fresh air will enter the mine through both the 5 meter (16 foot) diameter production shaft and an adjacent 6 meter (20 foot) diameter fresh air intake shaft. Air will circulate across the various mine levels and be exhausted to the surface through two 6 meter (20 foot) diameter exhaust raises, located at each end of the orebody. These exhaust raises will be equipped with 522 kW (700 hp) fans installed underground on the uppermost mining level. During the winter months, intake air will be heated to a minimum temperature of 2°C (35°F) by direct-fired heaters.

5.2.4 Mine Shaft Stations

Mine shaft stations (levels) will be established at approximately 120 meters (400 foot) intervals within the shaft (Figure 5.3). These stations allow personnel and materials to transfer from the shaft conveyances to the mine levels. Six main levels and drawpoint levels will service most of the mine area. On the main levels, access from the shaft station will be provided by a cross-cut drift, intersecting a lateral drift about 30 meters (100 feet) north of the orebody.

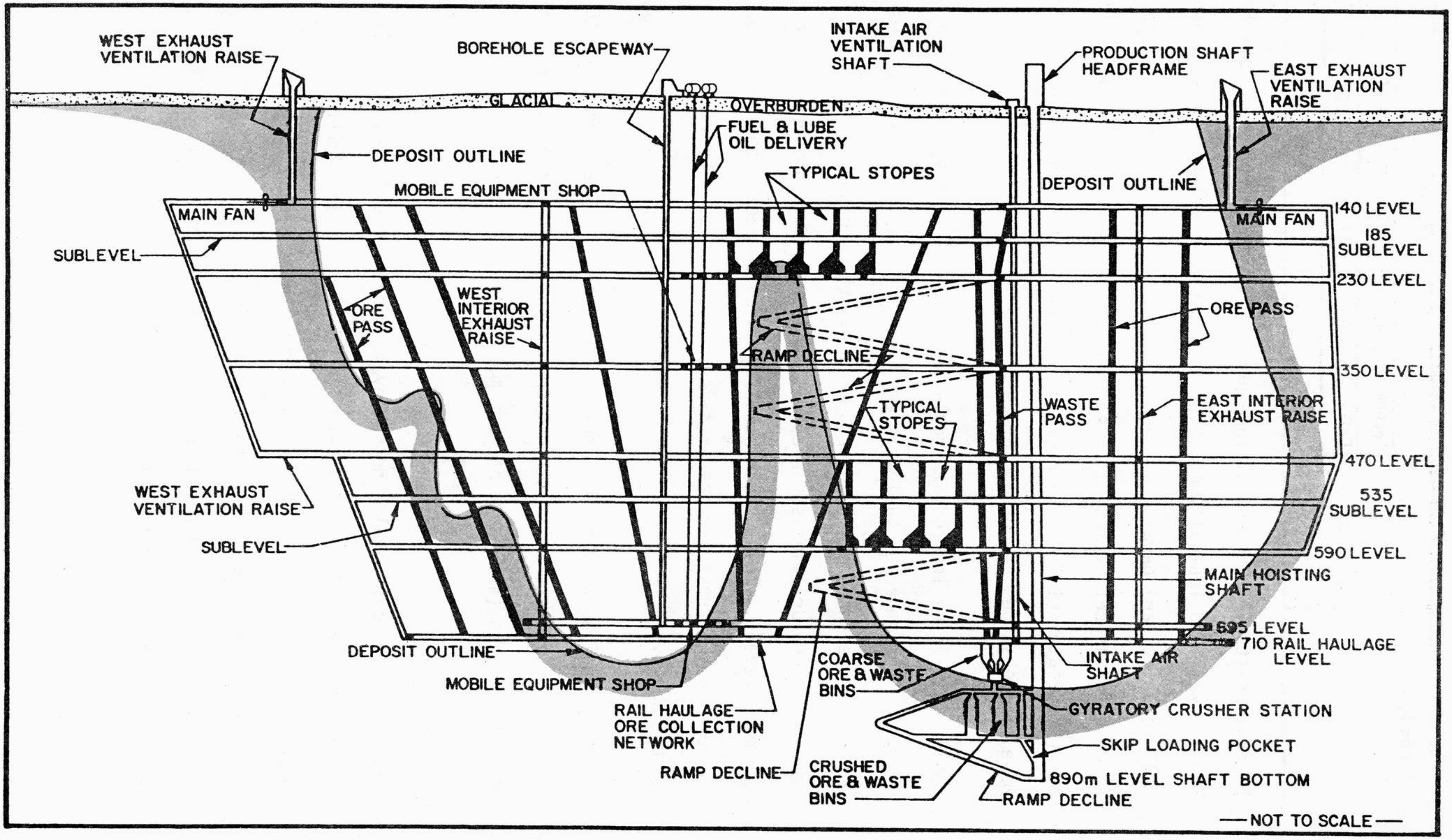

Figure 5.3 -- Longitudinal section illustrating primary development and major facilities designed for the proposed Crandon Mine.

Lateral drifts will be established parallel to the orebody in both the hanging wall and footwall, connecting to the main exhaust raises, and will serve as haulageways for the transport of rock (Figure 5.4). A set of cross-cut drifts will interconnect the lateral haulage drifts at appropriate intervals to provide both access and ventilation to the base of the stopes and drawpoints.

Sublevels will be located at regular vertical intervals above the main levels. The number of sublevels employed between the main levels will depend on the shape of the orebody, its width, and the mining plan. Generally, one drilling sublevel will be established between each of the main levels. The sublevels will also be connected to the exhaust raises and the fresh air intake raise. The ramp will provide access to the sublevels.

Stope dimensions will be 45 meters (150 feet) wide measured along the orebody strike, and will extend from hanging wall to footwall and the full 120 meters (400 feet) between main levels (Figure 5.5).

5.2.5 Drilling

Drilling from main levels and sublevels above the main levels will consist of vertical 150 millimeter (6 inch) downholes drilled to pre-engineered depths in a 4 x 4 meters (12 x 12 feet) pattern. The drilling will be accomplished using high pressure air and down-the-hole drilling technique from pre-excavated drill drifts arranged in an appropriate pattern.

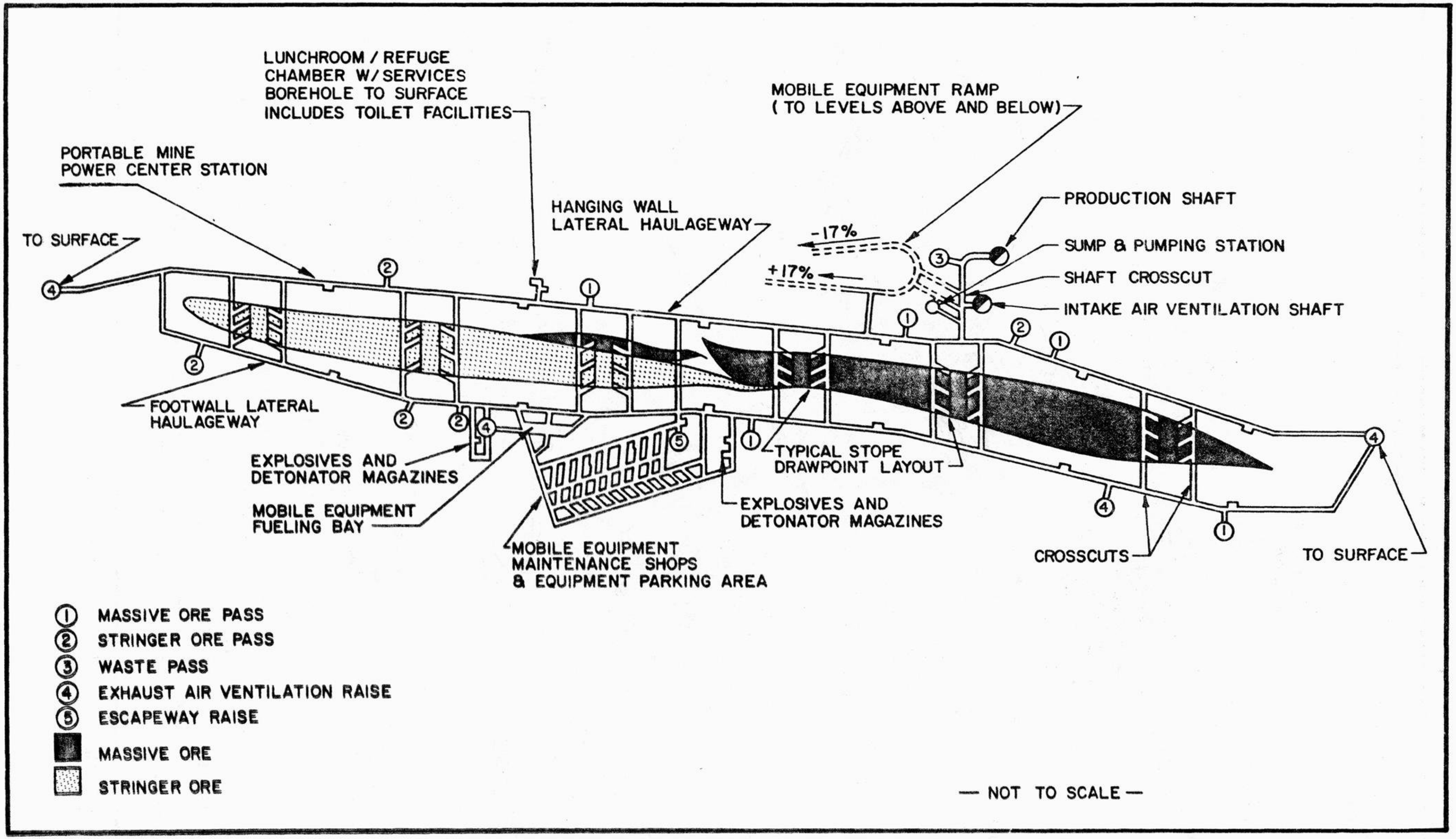

Figure 5.4 -- General arrangement of a typical underground main level designed for the proposed Crandon Mine (Plan View).

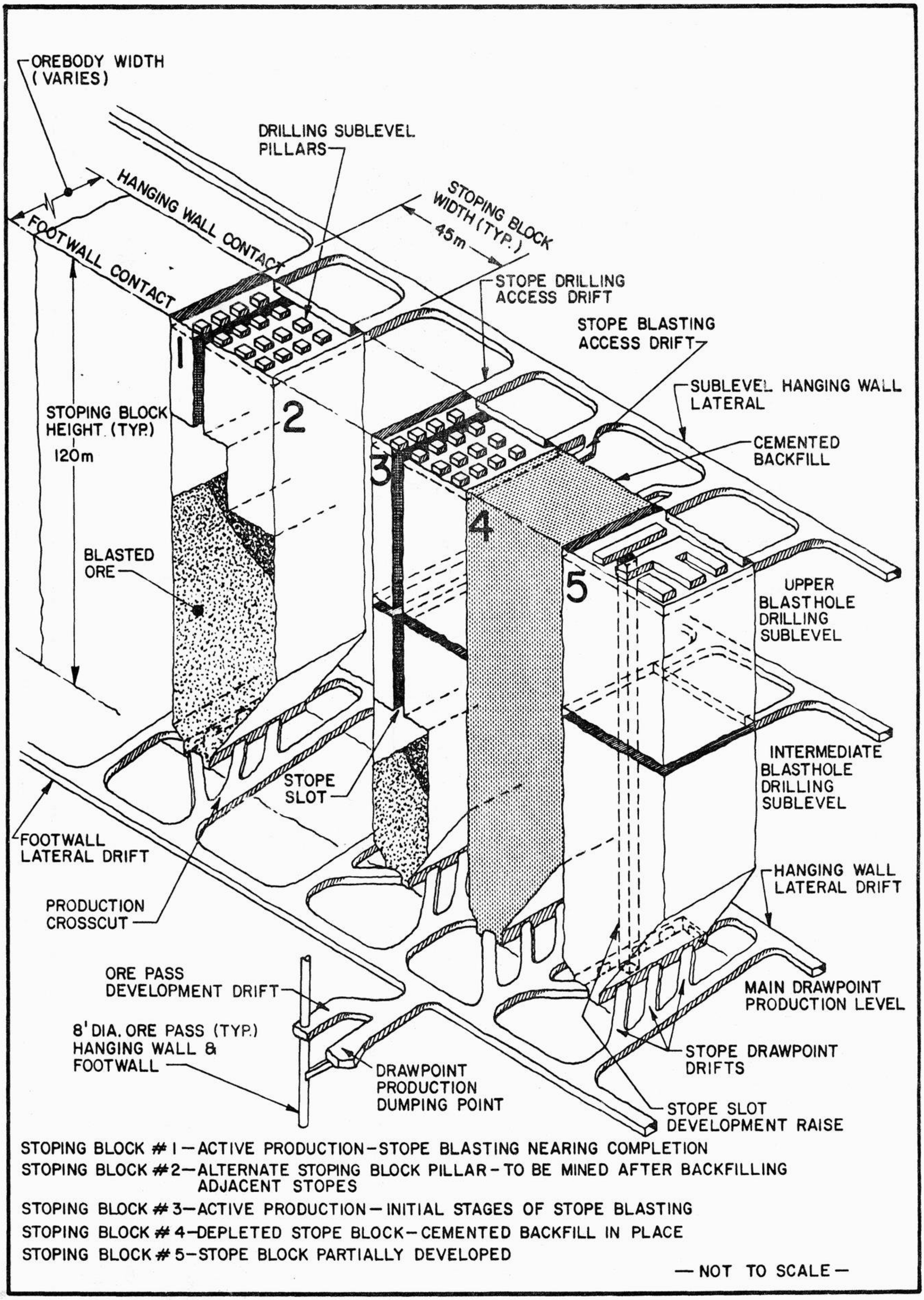

STOPING BLOCK #1—ACTIVE PRODUCTION—STOPE BLASTING NEARING COMPLETION

STOPING BLOCK #2—ALTERNATE STOPING BLOCK PILLAR—TO BE MINED AFTER BACKFILLING ADJACENT STOPES

STOPING BLOCK #3—ACTIVE PRODUCTION—INITIAL STAGES OF STOPE BLASTING

STOPING BLOCK #4—DEPLETED STOPE BLOCK—CEMENTED BACKFILL IN PLACE

STOPING BLOCK #5—STOPE BLOCK PARTIALLY DEVELOPED

— NOT TO SCALE —

Figure 5.5 -- Conceptual stope dimensions and sequence of ore extraction proposed for the Crandon Mine.

5.2.6 Stope Blasting

Stope blasting will be conducted as follows:

1) raisebore or drill and blast a slot raise,
2) open the slot or trench along the strike of the stope, or across the width of the stope, and
3) begin blasting slices, or rings, into the pre-excavated slot until the extremities of the stope are reached.

5.2.7 Mining Equipment

The most commonly used mining equipment will be drill jumbos, LHD units, and trucks. Level development will be accomplished with air and electric powered drill jumbos capable of drilling small diameter holes to a depth of 2.7 to 4.6 meters (9 to 15 feet). Each round or section of tunnel advance will require approximately 60 to 80 holes. These holes, when loaded with explosives and detonated in a predetermined sequence, provide for drift advance roughly equal to the depth of the hole drilled. Broken rock will be removed from the tunnel face with diesel powered, rubber-tired LHD units. For haulage distances greater than 183 meters (600 feet), a combination of LHD units and trucks will be used.

5.2.8 Ore Passes

Ore passes will be located in both the hanging wall and the footwall, spaced such that the maximum haul distance per stope will be approximately 183 meters (600 feet). The locations of the ore passes will be dictated by computer simulation of mobile equipment haulage networks and by production schedule requirements, integrated to provide optimum utilization, flexibility, and productivity, including the separation of the two ore types.

All the ore passes will have a minimum inclination of 70 degrees and a diameter of approximately 2.4 meters (8.0 feet) to provide adequate flow of broken ore to the rail haul level (Figure 5.6). Loading pockets will be provided immediately above the rail haul level for temporary storage and muck flow control. These loading pockets will be provided with control chains and rail car feeder mechanisms.

5.2.9 Electric Rail Haulage

Electric rail haulage will be used on the lowest ore collecting level (710 meters) to transport the broken rock. Collection of ore ahead of the underground gyratory crusher will involve the use of a one-train, one-locomotive trolley haulage system, utilizing a 21 to 23 metric ton (23 to 25 ton) locomotive and 7.6 cubic meter (10 cubic yard) mine cars. Massive ore, stringer ore, and waste rock will be loaded separately into rail cars and transported to their respective coarse storage bins. A fully automated rail car dumping device will be provided above each of the bins.

5.2.10 Ore Storage Bins

Ore storage bins (massive, stringer, and waste) located above the crusher will be sized to permit crushing on two shifts while mining and haulage are being conducted on three shifts (Figure 5.7).

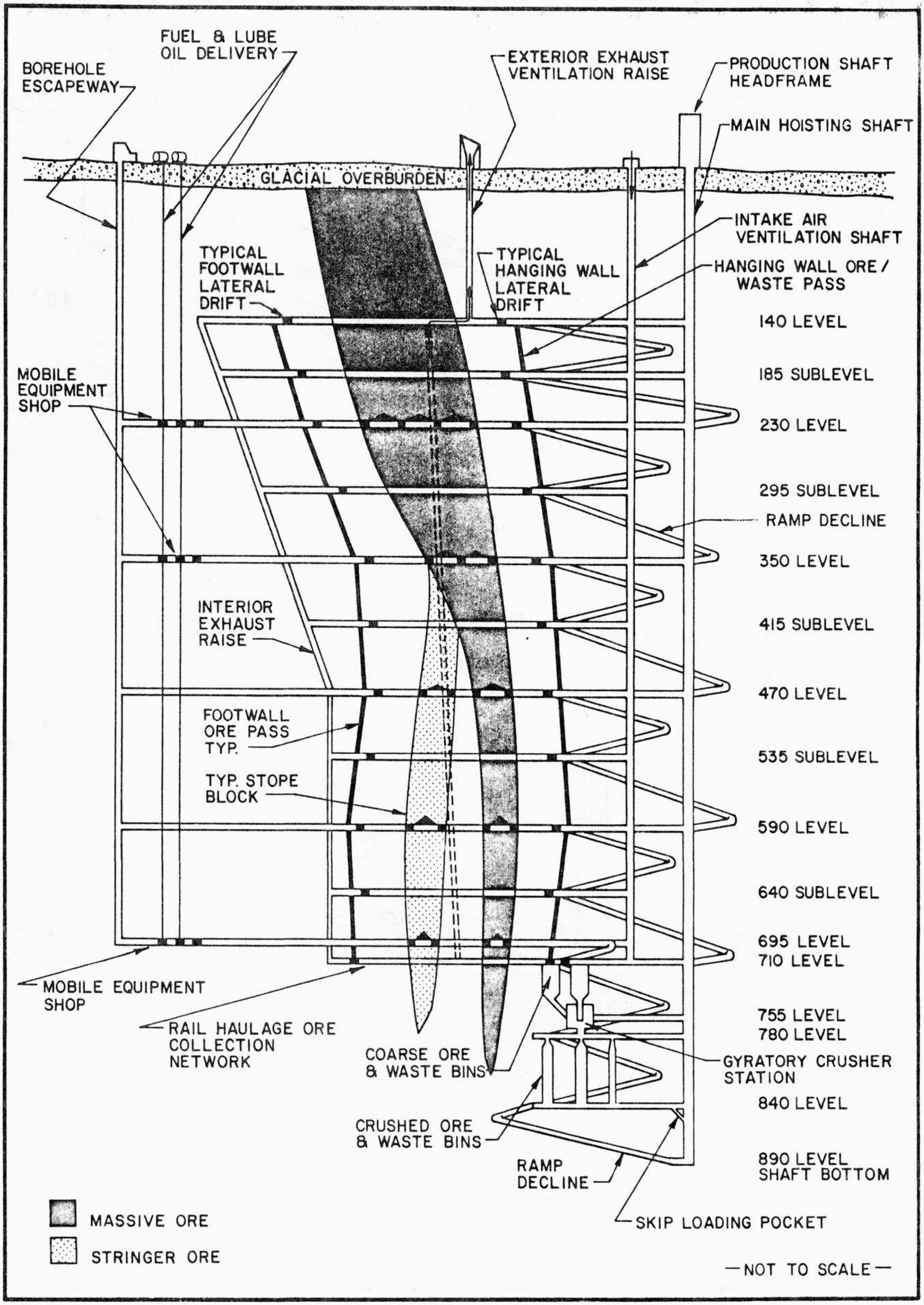

Figure 5.6 -- Generalized cross-section illustrating primary development and major facilities designed for the proposed Crandon Mine.

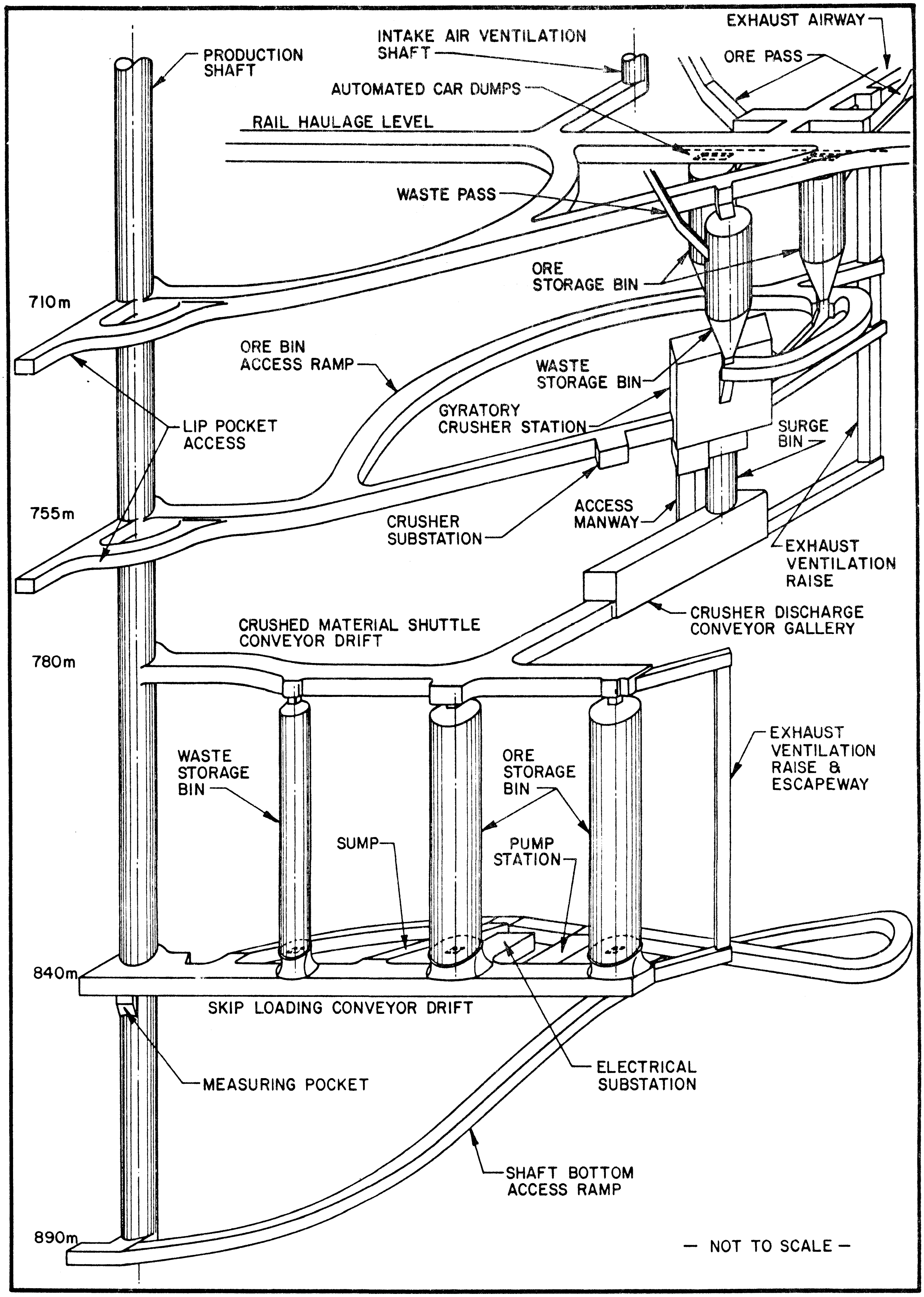

Figure 5.7 -- Conceptual diagram of shaft, crusher, ore and waste bins, and transfer conveyor system including ancillary facilities designed for the proposed Crandon Mine.

5.2.11 Gyratory Crusher

An underground gyratory crusher will reduce the ore and waste rock to a maximum size of minus 150 millimeters (minus 6 inches) to optimize hoisting efficiency. Rock will be discharged through lined chutes from the base of the coarse storage bins into the crusher.

The crusher station and material handling system will be equipped with a dust collection system. A surge bin will be provided at the base of the crusher to regulate the flow of crushed material to a transfer conveyor belt. This transfer belt will convey the crushed material from the surge bin to the appropriate crushed ore storage bin.

5.2.12 Crushed Ore Bins

Crushed ore bins will provide storage so that crusher delays during a working shift will not interrupt the hoisting schedule and, conversely, hoisting delays during a work shift will not interfere with the crushing schedule. In addition, the crusher can have a planned maintenance shutdown of two shifts without interfering with the hoisting schedule.

5.2.13 Loading and Hoisting

Loading and hoisting of fine ore and waste rock will occur from pockets adjacent to the production shaft. The capacity of each loading pocket is identical to the skip's capacity. An adjustable weightometer system will be installed beneath the pocket to regulate skip loading.

As one pocket is being loaded from the conveyor, the other pocket will be unloaded into the waiting skip. These skips are hoisted in balance while one is being loaded at the pocket, the other is unloaded in the skip discharge bin.

5.2.14 Backfilling

Backfilling of mined-out stopes with classified mill tailings will be accomplished utilizing a pipeline system interconnecting the underground workings with the mill. This backfill material is required to support the stope walls and to absorb the transfer of inherent and induced stress during subsequent adjacent excavation.

Tailings material produced during bench metallurgical testing of core samples was studied to determine its suitability for use as mine backfill. It was concluded that a combination of deslimed (removal of fine fraction) pyrite concentrate and plus 30 micron pyrite sand prepared as part of the milling process will provide backfill material with the desired drainage and strength characteristics. Cement will be added to the backfill slurry in varying amounts to provide increased stability and strength. Approximately 45 percent of the tonnage milled will be returned underground as backfill.

Once the ore from a stope has been recovered, a bulkhead will be constructed in each stope access opening to contain the slurried backfill. These backfilling procedures will ensure mine area stability and eliminate any potential for surface effects.

5.2.15 Power Distribution System

The primary power distribution system was designed using projected connected loads and the total anticipated maximum demand for the underground mine. A 13,800 volt (13.8 kV) system will provide the most economical power for the underground operation. The distribution system will contain a normal and emergency feeder line, such that, if a section of one feeder should fail, full mine power could be supplied by the backup line.

In an underground mine there are normally two different categories for equipment which must be supplied with electrical power. They are as follows:

1) permanently located equipment such as pumps, fans, crusher and conveying equipment, and lighting, and
2) portable or mobile mine equipment which moves as the mine development progresses.

Portable mine power centers, sized at 500 kVA, will supply the moveable mining loads, from 13.8 kV distribution to these power centers.

Certain permanent underground loads will be supplied with power at 4,160 volts. This is the best and most economical utilization voltage for motor loads above 200 hp. These permanent loads will be necessary to operate the primary ventilation fans and the gyratory crusher.

In addition, there will be distribution to various 480 volt permanent loads. These loads generally include mine pumps, underground crushing and conveying, loading pocket, trolley haulage system, shaft station services, shops, and secondary ventilation fans.

5.2.16 Communications

Communications will be provided by a surface dial telephone system extended to approximately 40 locations underground by a cable installed in the main shaft. A supplementary telephone system utilizing mine page type telephones will also be installed. Twenty of these units will be placed in permanent locations, while an additional 20 units will be temporarily located in active areas of mine advance. A separate mine page type telephone network also will be installed for the tailings backfill communications systems.

5.2.17 Explosives and Detonator Magazines

Explosives and detonator magazines will be located on each main level. They will be constructed in accordance with applicable State and Federal mine safety regulations.

Explosives from the magazines will be used in the development heading and for secondary blasting of oversize rock in the drawpoints. Distribution will be controlled by a designated attendant on each shift. Underground transportation of explosives will be by a vehicle equipped with containers meeting applicable safety regulations.

Explosives and detonators required for stope blasting will be supplied from a mine surface magazine as required. They will be transported down the shaft in suitable containers, loaded into properly equipped vehicles, and delivered to the stope blasting area. Only those explosives and detonators approved by the Mine Safety and Health Administration for underground use will be utilized. When explosives and detonators are being transported in the shaft, no personnel travel, production hoisting, or other simultaneous shaft activities will be permitted.

5.2.18 Maintenance Shops

Maintenance shops will be provided on two main levels. These facilities, one located on the 350 level and the other on the 695 level, are intended to function primarily as inspection, lubrication, and major repair centers. The internal ramp will provide access and permit movement of the equipment to and from these facilities and other levels within the mine.

These underground maintenance facilities will be situated adjacent to the footwall lateral and centrally located opposite the access to the ramp. The main access drift and footwall lateral will provide adequate flow-through ventilation and allow for an efficient flow of traffic.

Within the confines of the shops, areas will be provided for cleaning, inspection, and maintenance. Auxiliary facilities will include a warehouse, offices, lunch rooms, and sanitary facilities. The entire complex will be vented directly to an exhaust raise. All the shop work areas will be equipped with monorails and cranes to assist in movement and placement of material.

A parking area will be provided with access to the shop and the footwall lateral. It will serve as both a marshalling area at the start of shifts and for pre-operation inspection of equipment.

Smaller preventative maintenance/wash-down shops and equipment parking areas will be provided on the other drawpoint or main levels.

5.2.19 Fuel Handling System

The diesel fuel handling system for the mine will consist of a surface bulk tank and storage tanks on the 230, 350, and 695 levels. Fuel will be dispensed either directly from these tanks or by means of a fuel truck serving intermediate mine levels.

The fuel storage area will be located adjacent to the footwall lateral and vented directly to an exhaust airway that will be separated from the main haulage lateral by fire doors. A dry chemical fire fighting area will be provided in the fuel bay. The storage tanks will be filled once a day.

The hydraulic fluid supply system will be similar to the fuel system in design and operation except for the deletion of storage tanks on the 230 level.

5.2.20 Mine Drainage

Mine drainage has been divided into three networks which will collect and discharge water. Mine water will be collected for pumping on the 350 and 840 levels and in the production shaft bottom.

Water pumped from the 350 level will consist of backfill water, drill water, and groundwater from the 350 level and above. Similarly, water collected on the 840 level will consist of drill water from mine development, groundwater, water from the crusher/conveyor system, and about 95 liters per minute (25 gallons per minute) pumped from the shaft bottom.

Mine levels will be driven at a minimum grade of plus 2 percent and provided with ditches to facilitate gravity flow of the mine water to the collection points. Intermediate sumps located on the sublevels and intermediate main levels will collect and feed the water by gravity flow through drill holes to settling sumps located on the 350 and 840 main pumping levels.

Pump stations will be equipped with standby capacity to assure adequate and reliable capacity. Pump discharge will be directed to the surface for subsequent discharge into the treatment/waste disposal system.

5.2.21 Water Supply

Water will be supplied to the mine by two separate pipeline systems installed in the service compartment of the main shaft. One system will supply utility water for drilling operations and wash-down water while the other system will provide potable water for personnel consumption. Each system will be clearly designated as to use.

Utility water will be distributed on all mine levels, as level development advances. Potable water will be distributed to the lunch rooms on all the levels. For a further discussion of Water Management see Section 9.0.

5.2.22 Sanitary Facilities

Sanitary facilities will be constructed on all levels in the vicinity of the lunch rooms. Proper maintenance of these facilities will be instituted, as required.

5.2.23 Lunch Rooms/Refuge Chambers

These multi-purpose lunch room facilities will include meeting areas, refuge chambers, first aid stations, and escapeways. Two such facilities will be excavated per level mid-way between the shaft and the east and west extremities of the orebody. Only one of these rooms will be established on the 840 level, near the crusher station. Additional lunch room/refuge chambers have been centrally located in the footwall on all main levels. From the rear of these refuge chambers access will be provided to a 1.8 meter (6 feet) borehole escapeway capable of transporting men in a capsule to the surface. An internal pressurized escapeway will also be provided from the hanging wall 840 level refuge chamber to one of the 710 level hanging wall refuge chambers.

EXXON MINERALS COMPANY **CRANDON PROJECT** PRELIMINARY DESCRIPTION		**Author:** C. E. Fowler
	Section: 6.0	**Checked:**
	Date: 10/1/80	**Approved:**

6.0 MINE/MILL SURFACE FACILITIES

6.1 General

The mine/mill surface facilities described herein include those required on the surface for support of the underground mine; those for handling, storing, and crushing the ores on the surface; and the concentrator where the minerals will be separated from the ores to produce concentrates. The ancillary facilities and utilities required to support the mine/mill operations are described in Section 10. All of the surface and ancillary facilities, with exception of the railroad spur and the access road will require an area of about 40.47 hectares (100 acres). About one-third of this area will be covered by buildings, roadways, parking lots, and other installations.

The mine/mill surface facilities will be designed and constructed with a capacity to handle and process a total of 9 100 metric tons per day (10,000 tons) of two types of ore from the underground mine. Since the two types of ore (massive and stringer) will require somewhat different milling and concentrating processes, they will be handled, stored, and processed separately. All of the necessary equipment required for these processes will be located in the mill building.

The facilities will be designed to produce concentrates in the most efficient manner possible, based on proven and established technology and consistent with environmental and regulatory requirements. Some of the primary considerations in the development of the overall mine/mill surface facilities should be:

1) The facilities should be located as close as possible to the mine hoist headframe to minimize area impact and ore transport systems;
2) Advantage should be taken of topography in order to facilitate gravity flow of materials;
3) The surface area will be graded where necessary such that all operations will be in the same surface watershed;
4) Mine/mill surface drainage will be collected for any necessary treatment;
5) In consideration of local climatic conditions, as many installations as possible should be combined under one roof with the major buildings connected by tunnels;
6) All buildings and equipment layouts shall be arranged to achieve a healthy and safe environment for the operating personnel;
7) Equipment selection and layout shall meet federal noise regulations with noise abatement procedures incorporated where necessary; and
8) All buildings and structures should be designed to achieve the best overall visual aesthetics consistent with the local area.

6.2 Mine Surface Facilities

6.2.1 General

The mine surface facilities support the underground mine operations. Included are the collar house, mine operations building and change area, shaft access tunnel, mine air heaters, mine backfill preparation facilities, and air compressors (Figure 6.1). The mine hoist headframe is included as part of the mine and is described in Section 5.0.

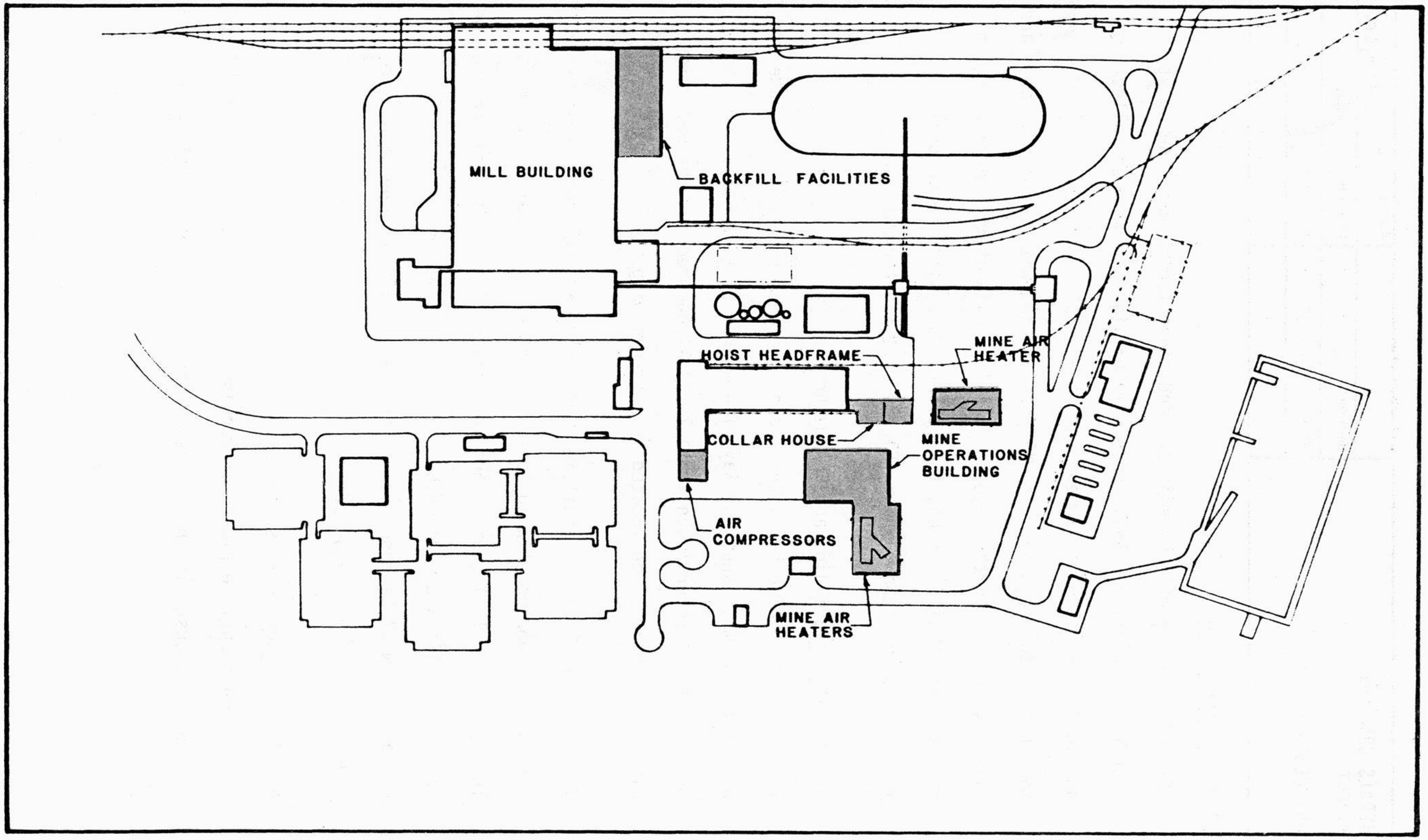

Figure 6.1 -- A schematic plan of possible Crandon Mine/Mill Facilities showing the mine surface facilities as shaded areas.

6.2.2 Collar House

The collar house will be adjacent and connected to the mine hoist headframe structure. This house will provide a protected collecting and laydown area for equipment and materials to be transported down the shaft into the mine. It will be equipped with overhead cranes and will have access to the cage hoist in the main shaft. A narrow gauge railroad track will connect the collar house with the central maintenance and repair shops (Figure 10.1; Section 10).

6.2.3 Operations Building and Change Area

The operations building is shown near the headframe and will have access to the main shaft by way of a tunnel (Figure 6.1). The management and supervision installations required for the underground mine operation will be located in this building.

The lower level of this building will contain a complete change room for the mine personnel with lockers, showers, and clothing baskets. This lower level also will contain mobilization, lamp, and mine rescue rooms, as well as a tool crib, first aid and utility rooms. The change room will be connected to the main shaft and the main gate house by personnel tunnels.

6.2.4 Mine Air Compressors

The mine and surface plant air requirements will be accomplished from compressors housed in an enclosed room adjacent to the maintenance and repair shops. Compressed air will be supplied to the underground operations for use in rock drills and other air-powered equipment, and for general use.

6.2.5 Mine Air Heaters

Because of low ambient temperatures during winter, it will be necessary to heat the mine ventilation air before drawing it into the mine. This is to prevent freeze-up and adverse working conditions in the mine during the periods of cold outside temperatures. The mine air heaters will be located on the air intakes to the main shaft and ventilation shaft, and will be sized to insure a minimum air intake temperature of 2°C (35°F).

6.2.6 Mine Backfill Facilities

It is planned to use the coarse part of the tailings from the milling process as backfill in mined-out areas of the underground mine. The facilities for preparing, storing, and handling the backfill will be located adjacent to, and will be an integral part of, the mill building. Backfill sand slurry tanks and a cement storage silo will be provided. Also, to be located in this area are the cement/sand mixing equipment and the pumps to transport the sand slurry to a holding tank adjacent to the mine backfill hole. As needed underground in the mine, the sands will be transported as a slurry in pipelines.

6.3 Ore Handling, Crushing, and Storage

6.3.1 General

These facilities will include conveyors for moving the ore from the headframe to storage, the coarse ore storage building, ore reclaim feeders, conveyors for moving the ore from the storage building to the mill building, the fine crushing facility and conveyors, and the fine ore storage bins. Equipment for handling and disposing of mine waste rock brought to the surface also will be included (Figure 6.2). On the surface, the ore will be transported and stored under cover at all times as protection from precipitation and for dust control.

6.3.2 Coarse Ore Storage Conveyors

Once the ore is on the surface, it will be transported by covered belt conveyors from a bin in the hoist headframe to the coarse ore storage building. The same conveyor will be used to transport the two types of ore (massive and stringer), but at different times. In the top of the storage building there will be two conveyors, one of these reversible to transport the ores separately to the respective storage areas.

6.3.3 Waste Rock Facilities

Waste rock generated during the initial and ongoing development of the underground mine will either be used for road building in the mine and backfilling in the mine, or will be hoisted to the surface for disposal. Any waste rock brought to the surface will be transported by belt conveyor to holding bins, and then loaded into trucks for transporting.

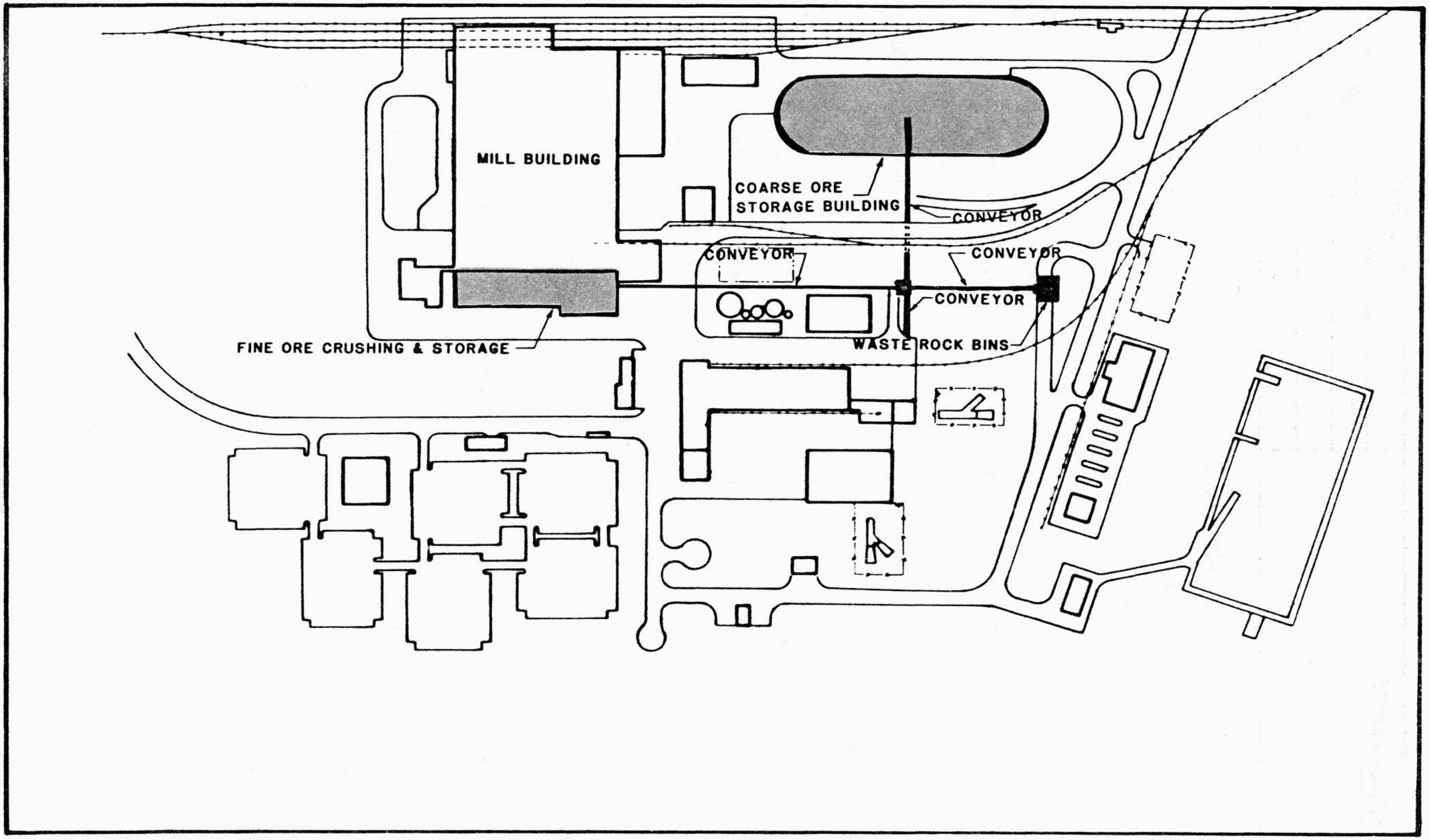

Figure 6.2 -- A schematic plan of possible Crandon Mine/Mill Facilities showing the ore handling, storage, and crushing facilities as shaded areas.

6.3.4 Coarse Ore Storage Building

The coarse ore storage building will be a structure about 60 meters (197 feet) wide by 198 meters (650 feet) long, and will cover almost 1.2 hectares (3 acres). The purpose of this storage building will be to provide a supply of ore on the surface to allow the mill to continue operation at those times when the mine may not be operating. The building will be divided into two separate stockpile areas, and will contain a total storage of both ore types sufficient for about 6 days normal mill operation.

The coarse ore storage building will be totally enclosed, with large roll-up access doors, and normally will not be heated. Dust control systems will be provided in the building as required.

6.3.5 Coarse Ore Reclaim Feeders and Conveyors

As needed by the mill, either massive or stringer ore will be reclaimed from the coarse ore storage building by 26 belt feeders (12 massive and 14 stringer) located in a reclaim tunnel beneath the ore stockpiles. Only one type of ore can be reclaimed at a time. The belt feeders will then discharge onto two collecting conveyors, each for a respective ore, which transports the ore to the coarse ore reclaim conveyor. The ore then will be transported to the fine crushing section of the mill building.

6.3.6 Fine Ore Crushing

The fine ore crushing facility will be located in one end of the mill building, and will include ore surge bins, secondary and tertiary crushers, vibrating screens, and recycle and storage conveyors. The purpose of this facility will be to further crush the ore to reduce it from about minus 150 millimeters (minus 6 inches) to about minus 16 millimeters (minus 5/8 inches) for feed to the grinding circuit. The two ore types will be crushed separately, but using the same equipment. Different times of the day will be allocated for the crushing of each ore type.

The ore crushing plant will be totally enclosed, and suitable dust control systems will be provided. Special attention will be given to the design in order to minimize noise emissions.

6.3.7 Fine Ore Storage

After the ore is crushed to minus 16 millimeters (minus 5/8 inches) for grinding circuit feed, it will be transferred by conveyors to the fine ore storage bins. The two ores will be stored separately in 15 fine ore bins (7 massive and 8 stringer). A storage capacity sufficient for 2.5 days of normal operation of the concentrator will be provided.

6.4 Concentrator

6.4.1 General

The concentrator will be located in the mill building and will include primary grinding; flotation; concentrate dewatering and drying; concentrate handling, storage, and shipping; reagent storage, mixing, and handling; the milk-of-lime facility; and office, laboratory, and change area (Figure 6.3). This includes all of the required equipment between the ore belt feeders below the fine ore storage bins and the concentrate loadout area.

The purpose of the concentrator facilities will be to further reduce the particle size of the ores by grinding; to separate the minerals from the ores to produce separate concentrates of zinc, copper, and lead; and to dewater and dry the concentrates for shipment.

6.4.2 Mill Building

The mill building will house the fine ore crushing and storage described in paragraphs 6.3.6 and 6.3.7, as well as the concentrator. The mill building will be about 120 meters (395 feet) wide by 194 meters (636 feet) long, and will cover over 2.23 hectares (5.5 acres). The building will have different floor elevations between the grinding section and flotation section to take advantage of the natural terrain, and to allow for gravity flow in the process wherever practical.

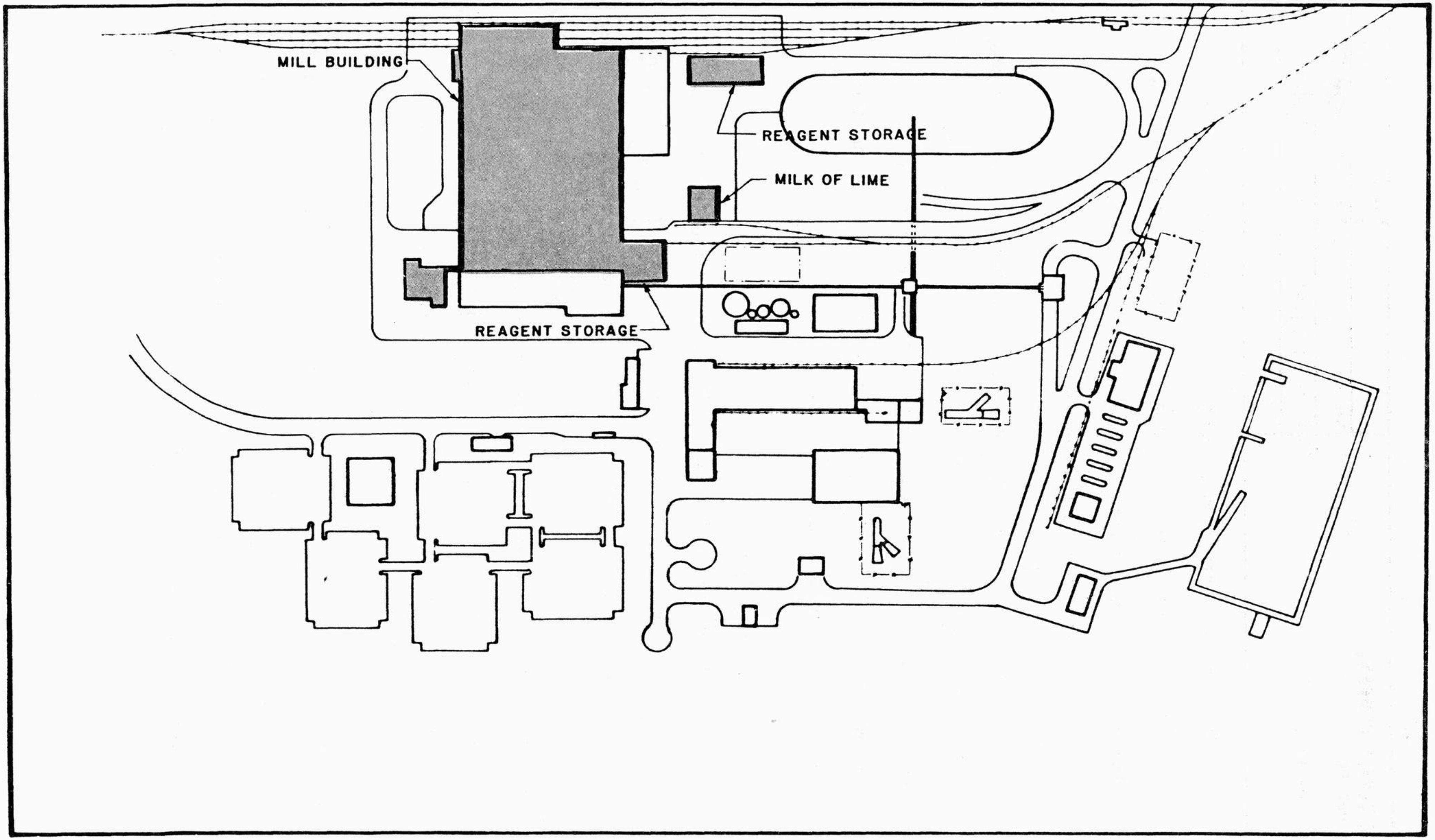

Figure 6.3 -- A schematic plan of possible Crandon Mine/Mill Facilities showing the concentrator facilities as shaded areas.

It is planned to have a main control room near the center of the building from which most of the milling process can be viewed, monitored, and controlled. A computer may be utilized to assist in monitoring and controlling the process.

Electrical power, utilities, heating, and ventilation will be provided in the mill building as required. Road and railroad access will be provided into the primary grinding section and the concentrate loadout section. Overhead cranes will be provided for handling equipment and materials.

6.4.3 Primary Grinding

The purpose of primary grinding will be to further reduce the ore particle size to that suitable for supply to the flotation process. Grinding will occur in two identical grinding circuits - one for massive ore and one for stringer ore. Each circuit will consist of feeders and belt conveyors from the fine ore storage bins, a rod mill, a ball mill, pumps, cyclones, an aerator, and auxiliary equipment. Provisions will be made for sufficient storage of spare rods and balls for the mills.

Preliminary studies indicate that the rod mills will be 3.7 meters (12 feet) in diameter by 4.9 meters (16 feet) long, and will be driven by 1250 horsepower motors. The ball mills will be 4.7 meters (15.4 feet) in diameter by 7.6 meters (25 feet) long, and will be driven by 3000 horsepower motors.

6.4.4 Flotation

Flotation is the process used to physically separate the zinc, copper, and lead mineral grains from the ore to produce concentrates. The flotation section will include all of the equipment required for this process.

The most prominent equipment in the flotation section is a series of flotation cells (machines). Gravity flow will be used where possible in the flotation process. However, pumps will be provided as required for pumping the ore slurries, concentrates, and tailings to the next step in the process. The flotation cells will be located on an elevated floor with adequate headroom below for locating the pumps and other auxiliary equipment.

At a point in the flotation process it will be necessary to put the ore slurry through a regrinding step. Two regrind ball mills, somewhat smaller than the primary grinding ball mills, will be provided for this grinding step.

6.4.5 Concentrate Dewatering and Drying

The three concentrates (zinc, copper, and lead) produced in the flotation facilities of the concentrator will require dewatering to a specified moisture content prior to shipment. Dewatering is necessary for ease of handling, and to reduce the weight and consequent cost associated with shipping the concentrates to a refinery or smelter. Each of the three concentrates will be dewatered and dried separately in equipment specifically selected for the particular concentrate.

Concentrate dewatering and drying, will be a three step process. In the first step, the concentrates will be pumped into large diameter steel tanks called thickeners. These thickeners will be elevated above the floor and will be designed with bottoms which slope toward the center. In the thickeners, the solids will settle to the bottom where low speed revolving blades will rake the mineral particles to the center for collection and removal as a dense sludge. The excess water will be decanted over the top edge of the thickener and then pumped to the reclaim water system.

The next step will be to pump the thickened concentrates into filters where vacuum pumps will be used to remove additional moisture by vacuum filtration. The moisture content in the filter cake, coming from the filter, will vary from about 7 to 15 percent.

In the case of the copper concentrate, the moisture content (7%) will be low enough for shipment without further dewatering. However, it will be necessary to further reduce the moisture content of the zinc and lead concentrates to less than 5 percent. Rotary type dryers will be used to further reduce the moisture in zinc and lead concentrates. The zinc concentrate dryer will be about 2.4 meters (7.9 feet) in diameter by 18.3 meters (60.0 feet) long, and the lead concentrate dryer will be about 0.9 meters (3.0 feet) in diameter by 7.3 meters (24.0 feet) long.

After dewatering and drying, the various concentrates will be carried by belt conveyors to the concentrate storage area.

6.4.6 Concentrate Handling, Storage, and Shipping

These facilities will be totally enclosed in one end of the mill building, and will have multiple railroad tracks for loading and handling rail cars. Provisions will be made for separate storage of zinc, copper, and lead concentrates.

It is planned to ship the concentrates by rail to other locations for further processing. The concentrates will be transported from the respective storage facilities by belt conveyors to rail cars for loading. These belt conveyors will be equipped with belt scales to control the rail car loading. Car pullers will be provided for moving the rail cars during loading operations.

6.4.7 Reagent Storage

This facility will be divided into two functional areas, one for storage of bagged and drummed reagents, and one for storage of liquid bulk reagents.

Drummed and bagged reagents will be stored in a building which adjoins the mill in the area of the primary grinding facilities. This building will be designed for both trucks and rail car unloading. Bags and drums of reagents will be moved from this area to the reagent mixing area by forklift truck.

Liquid bulk reagents will be unloaded from either rail cars or trucks into suitable surface storage tanks. These storage tanks, some of which will be located within special catchment basins, will be designed for storage of the respective reagents.

6.4.8 Reagent Mixing and Handling

The reagent mixing and handling will occur within the mill building, for the different reagents required for the concentrator process. Storage tanks will be provided for the mixed, or prepared, reagents. The facility will be designed for the preparation of the different reagents on a one shift per day, 5 days per week basis, and to store enough prepared reagents for the continuous operation of the concentrator.

Drums and bags of reagent will be emptied directly into mixing tanks equipped with agitators. Liquid bulk reagents will be pumped from their respective storage tanks directly into mixing tanks.

The properly prepared and mixed reagents will be transferred to reagent storage tanks, usually on a daily basis, to reagent day tanks located in the flotation area.

6.4.9 Milk-Of-Lime $[Ca(OH)_2]$ Slurry

Considerable quantities of lime will be required in processing the ores, and the milk-of-lime facility will be designed to prepare the lime for use. The lime plant will be located in a separate building near the mill building, and will be accessible by both truck and railroad. All unloading will be done under a roof with adequate dust control.

Burnt Lime (CaO) will be received, unloaded, and conveyed into storage bins. From these bins, the lime will be fed into a ball mill circuit, where it will be ground and slaked by the addition of water. The milk-of-lime will be stored in agitated tanks and, as needed, will be pumped into a distribution tank located in the reagent mixing and handling area in the concentrator. The milk-of-lime will then be distributed to points throughout the concentrator by pipeline loops.

6.4.10 Operations Office, Laboratory, and Change Room

The operations office, laboratory, and change room will be included in a two-story building located adjacent to the mill and connected by an enclosed passageway. A tunnel between this facility and the gate house will provide personnel access during inclement weather.

The laboratory will occupy about one-half of this building and will contain the laboratory functions for efficient handling, preparation, and analysis of process samples.

The office-change room areas will occupy the other half of the building. Offices for all of the mill/concentrator supervisory personnel and complete change and lunch room will be provided in this area for all mill personnel.

7.0 CONCENTRATOR PROCESS DESCRIPTION

7.1 General

A concentrator is a facility in which ore is separated into concentrates and tailings. Concentrates contain the valuable minerals found in the ore, and tailings are the materials rejected after the valuable minerals have been recovered.

In order to produce concentrates, it is necessary to liberate the various minerals from the host rock and from each other, and to separate and recover these valuable minerals. Liberation will be achieved by crushing and grinding the ore to a size at which the valuable minerals will be discrete particles which can be separated from each other.

The sulfide mineral particles will be separated from the ore slurry by a selective flotation process. Selective flotation is the process in which specific sulfide mineral particles can be made to adhere to air bubbles, float to the surface of the slurry and form a froth which collects on the top of the water, or to remain in the slurry.

By the use of various reagents, the mineral may be made either to adhere to an air bubble or to remain in the water. The use of these chemical reagents permits the separation and recovery of the zinc, copper, and lead sulfides from the gangue minerals. Figure 7.1 is an illustration derived from a high speed photograph showing mineral adhering to air bubbles. The process works very much like that of a balloon elevating a gondola into the air.

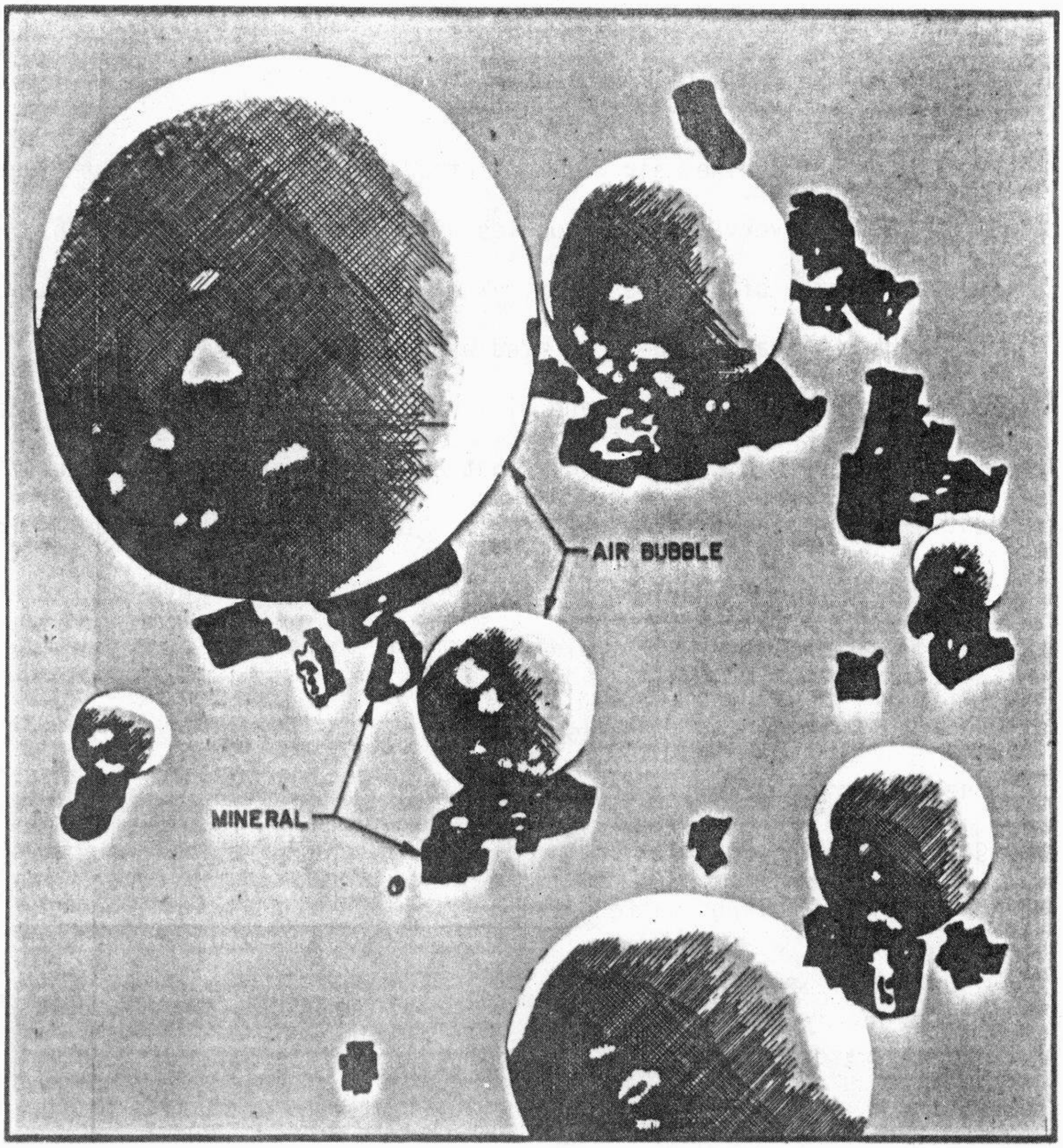

- NOT TO SCALE -

Figure 7.1 -- High speed photograph of mineral particles adhering to air bubbles.

The flotation process will be performed in flotation machines similar to that shown in Figure 7.2. The ground ore, in a slurry with water, comes from the grinding circuit. Reagents will be added and the slurry passed into the first cell of the flotation machine.

In the flotation machine, air will be introduced into the bottom through an impeller. The very fine air bubbles will be distributed thoroughly through the slurry of ore and water. When an air bubble encounters a mineral particle that has been treated with the proper reagent, that particle adheres to the bubble and will be transported with the froth to the top of the machine. A particle that has not adsorbed the proper reagent will not adhere to an air bubble. This particle then remains in the water and will be carried out with the water and form the tailing. The minerals collecting in the froth will form the concentrate.

By proper combination of reagents and the arrangement of the flotation machines, separations will be made between the various sulfide minerals and gangue. This results in the production of concentrates of zinc, copper, and lead, and a tailings waste product.

In the process of liberation and separation of minerals from the ore, the mill/concentrator will include the following activities:

1) Crushing and ore storage;
2) Grinding and classification;
3) Flotation;
4) Concentrate handling;
5) Pyrite flotation and mine backfill preparation;
6) Tailings disposal;
7) Reagent preparation; and
8) Process control.

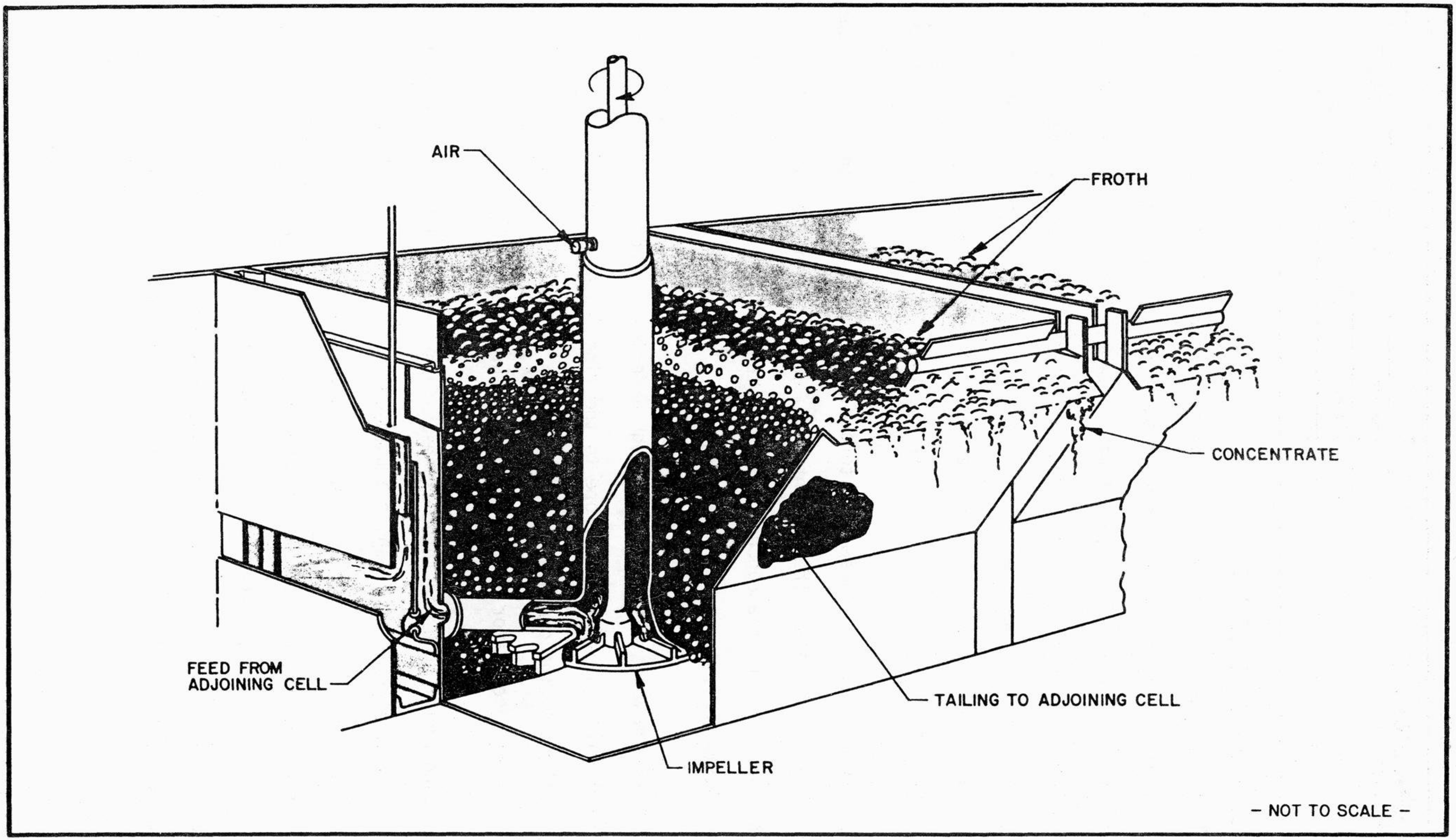

Figure 7.2 -- Flotation cell mechanism showing slurry feed to the cell, mineral laden froth (concentrate), and tailing product.

7.2 Crushing and Ore Storage

The first stage of crushing, to nominally minus 150 millimeters (6 inches) will be undertaken below ground in the mine. The ore will be hoisted to the surface two shifts a day, 5 days a week. The mine will produce two sulfide ores: a zinc-copper-lead ore (massive) and a copper-zinc ore (stringer). The hoisted ore will be delivered by feeders from an ore bin in the headframe to a conveyor belt which will deliver the ore to the coarse ore storage facility, where the two ores will be stored separately.

The purpose of the coarse ore storage building is to provide surge capacity between the mine and the concentrator, and to provide a supply of ore for the operation of the concentrator over the 2 days of the week in which the mine shaft is not in production.

Coarse ore will be reclaimed through a series of feeders onto conveyor belts which will direct the ore to the fine crushing plant. A schematic flowsheet of the crushing and ore storage system for the proposed Crandon concentrator is presented in Figure 7.3.

Crushing will occur in three stages. Each stage will be equipped with a machine suitable for crushing a particular size of rock. As mentioned earlier, the first stage of crushing will occur underground in a gyratory crusher. Gyratory crushers are quite effective in crushing ore from several feet in diameter to approximately 150 millimeters (6 inches) or less. The next stage requires a cone crusher, which will crush from approximately 150 millimeters (6 inches) to about 38 millimeters

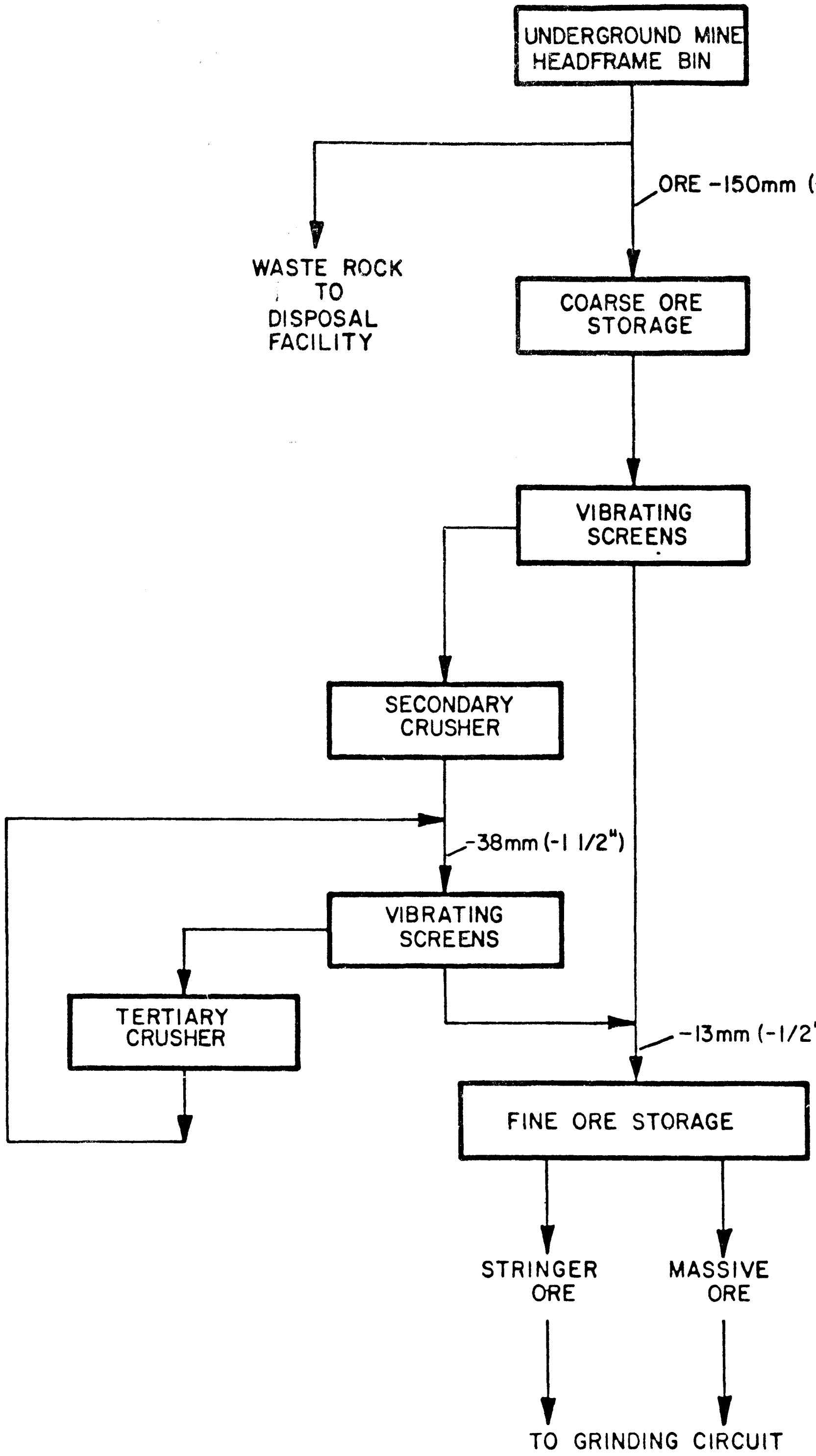

Figure 7.3 -- Schematic flowsheet of the crushing and ore storage system for the proposed Crandon concentrator.

(1.5 inch). The final stage involves a shorthead cone crusher which crushes from 38 millimeters (1.5 inch) to about 13 millimeters (0.5 inch). Each stage of crushing will be equipped with a vibrating screen to remove the fine ore ahead of the crusher. This will allow the crusher to operate more efficiently.

All crushers operate in a similar manner. They crush ore by squeezing it between the crushing surfaces of the machine. Figure 7.4 is a cut-away drawing of a cone crusher. The cone-shaped head rotates in an eccentric manner within the bowl of the machine. As the dry ore passes through the machine by gravity, it is squeezed between the head and the bowl and is broken. While gyratory and shorthead crushers differ in detail of design, they operate in a similar manner.

The crushed and screened ore will be conveyed to one of two sets of fine ore bins. Massive and stringer ores will be crushed and stored separately, and will be processed individually.

7.3 Grinding and Classification

The two ores, will be crushed separately and deposited in separate fine ore bins and readied for fine grinding. The finely crushed ore will be removed from the fine ore bins by a system of feeders and conveyor belts and directed to two identical grinding circuits. Each ore will be ground separately in its own grinding and classification circuit. Figure 7.5 contains a schematic flowsheet of the proposed concentrator.

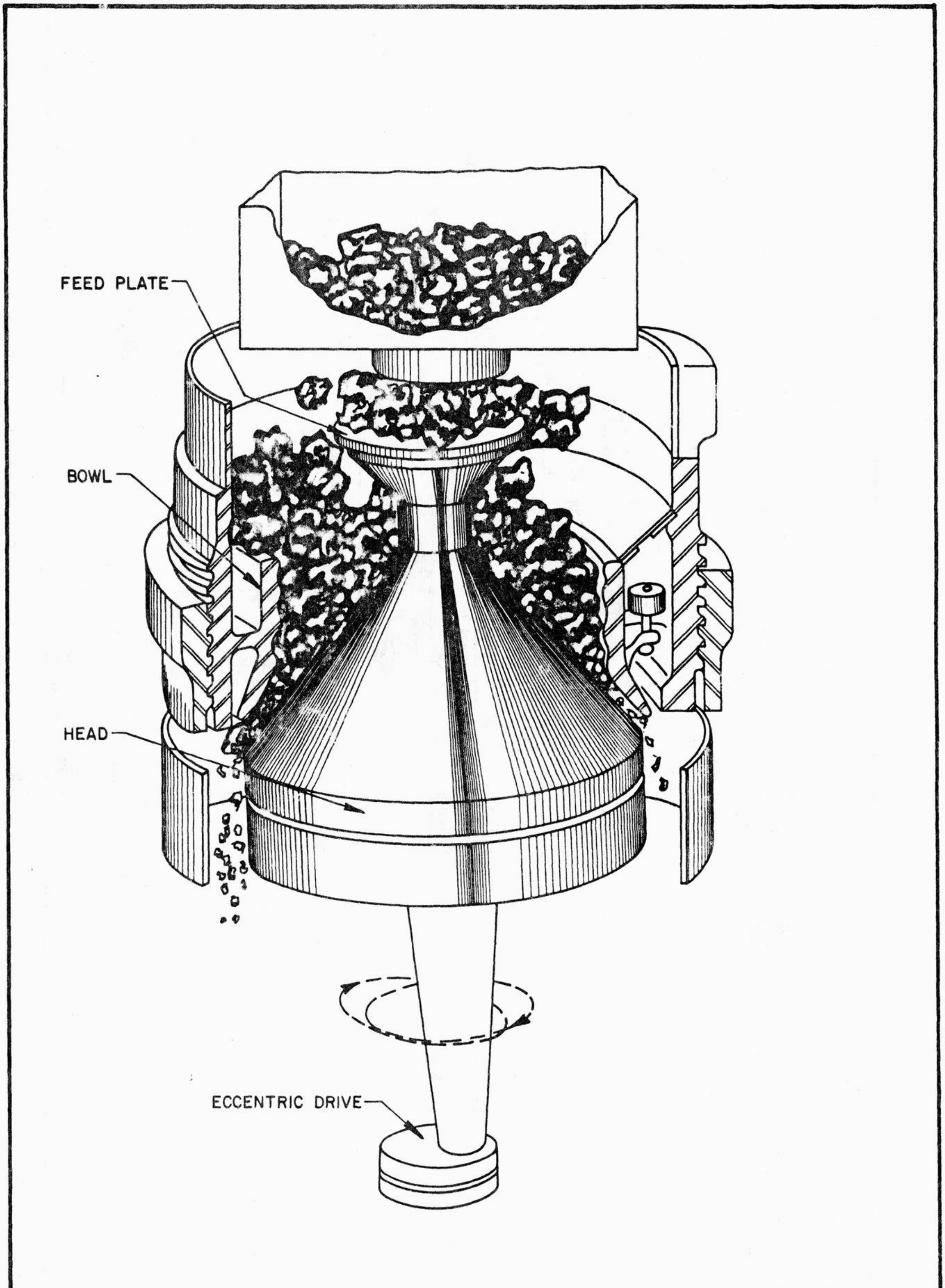

Figure 7.4 -- Cut-away view of a cone crusher.

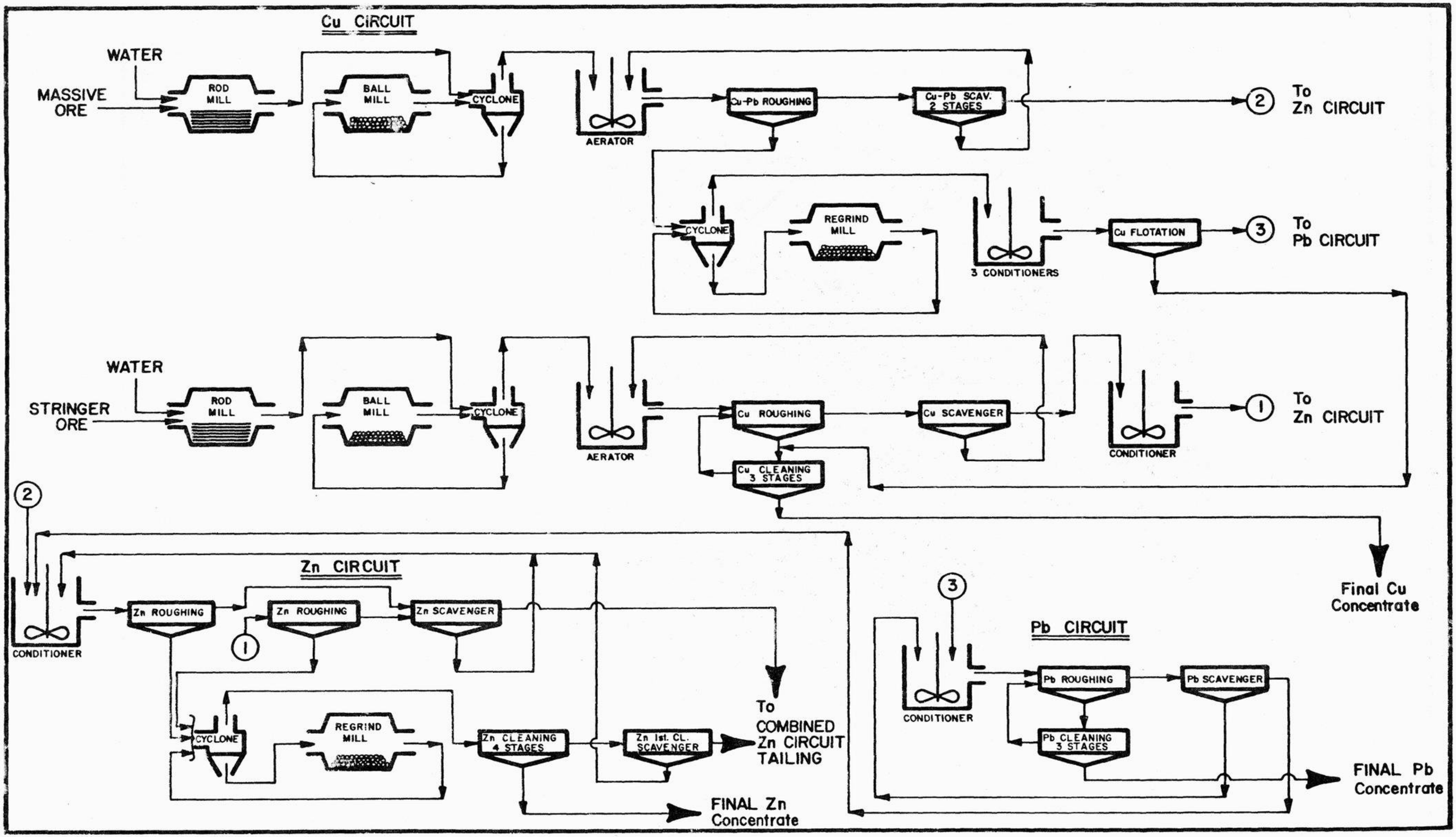

Figure 7.5 -- Schematic flowsheet of the proposed Crandon concentrator showing zinc, copper, and lead circuits for massive and stringer ores.

The operation of the grinding circuits will be identical for each ore. The crushed ore will be fed by a conveyor belt into a rod mill where water will be added and the ore will be ground. A rod mill is a large horizontal cylinder lined with heavy steel liners and filled with grinding rods approximately 51 to 76 millimeters (2 to 3 inches) in diameter the length of the mill. The mill will be rotated by means of an electric motor, and the rods tumble as the mill rotates. As the ore and water pass through the mill, the ore will be crushed between the tumbling rods to a particle size approximately the consistency of coarse sand. Because rod mills will not efficiently grind the ore to the necessary particle size for complete mineral liberation, an additional stage of grinding will be required.

The rod mill discharge will be pumped to a cyclone classifier in the ball mill grinding circuit. A cyclone classifier separates particles based on their size. The ore slurry will be pumped into the cyclone under pressure which causes the mineral slurry to rotate and the coarse particles will pass to the outside of the cyclone and will be collected at the bottom, while the finer particles will tend to collect towards the center and pass out through the top of the cyclone. Figure 7.6 contains a cut-away drawing of a cyclone. The coarse particles from the bottom of the cyclone will be directed to a ball mill for further grinding.

The slurry containing the crushed particles from the cyclone classifier will be ground in a ball mill. A ball mill is very much like a rod mill in that it is a horizontal rotating cylinder lined with heavy steel

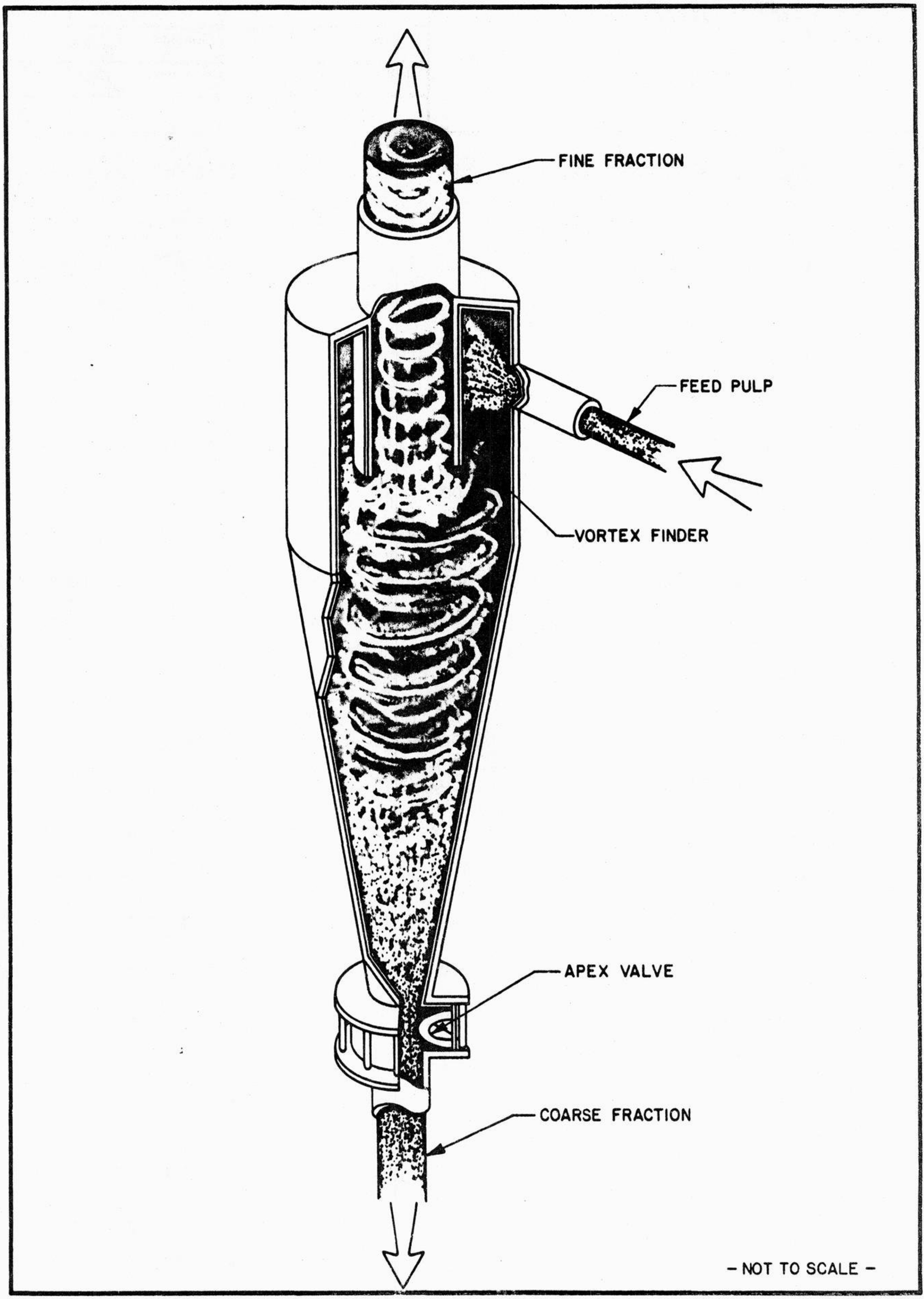

Figure 7.6 -- Cut-away view of a cyclone classifier.

liners and rotated by an electrical motor. The ball mill will be filled with alloy steel balls approximately 6 millimeters (0.25 inch) in diameter to a maximum of about 51 millimeters (2 inches). As the mill rotates and the slurry of ore and water passes through the mill, the impact of the balls falling on the mineral particles will cause them to break and result in ore size reduction and liberation. The discharge from the ball mill also will be pumped to the cyclone classifier, where the fine particles will be removed and the coarse particles recycled back to the ball mill.

7.4 Flotation

The slurry from the cyclone overflow will pass to an aeration step in which the slurry will be conditioned with reagents and air to prepare it for the flotation of the sulfide minerals. The aerators will consist of large slurry tanks containing agitator mechanisms which serve to introduce air into the slurry. Products from the aerator will be fed to the respective flotation circuits. The massive aerator will precede the bulk copper-lead flotation of the massive ore, and the stringer aerator will precede the copper flotation of the stringer ore.

7.4.1 Copper-Lead, and Lead Flotation Circuits

After grinding, aeration, and conditioning with reagents, the massive ore slurry will be fed into the distributor feeding several banks of flotation machines. This flotation step will produce copper-lead rougher concentrate, which requires further processing. The tailings from the copper-lead rougher flotation will pass to a scavenger flotation step in which additional copper and lead minerals will be recovered by flotation. The scavenger concentrate will be pumped back to the aerator for further treatment. The tailing from the copper-lead scavenger circuit will contain zinc from the massive ore and will be pumped to the zinc circuit.

The copper-lead rougher concentrate will be pumped to a regrind circuit containing a ball mill and cyclone classifier. Upon regrinding of the concentrate, the copper minerals will be separated from the lead minerals by another step of flotation. The copper concentrate then will be pumped to the combined copper cleaning circuit for the stringer ore. The lead tailing will then be pumped to a lead circuit to produce a lead concentrate.

7.4.2 Copper Flotation

After grinding, aeration, and conditioning with reagents the stringer ore will be subjected to flotation for the production of a copper concentrate and a tailing containing recoverable zinc. The copper flotation circuit will be similar to the massive copper-lead circuit containing roughing and scavenger steps.

The copper rougher concentrate, together with the copper concentrate produced in the copper-lead separation circuit of the massive ore flotation process, will be cleaned in a separate step. This cleaning will result in a production of a final copper concentrate.

7.4.3 Zinc Flotation

The feed to the zinc flotation circuit will consist of the following three tailing products:

1) Stringer ore scavenger tailing;
2) Massive ore copper-lead scavenger tailing; and
3) Lead scavenger tailing.

The total zinc flotation circuit feed will be conditioned with reagents and directed to zinc flotation. Zinc rougher and scavenger concentrates will be produced. The zinc scavenger concentrate will be returned to the beginning of the circuit for reprocessing.

The zinc rougher concentrate will be reground prior to cleaning. The regrind circuit will consist of a ball mill and cyclones operating in closed circuit. Following regrinding, the concentrate will be cleaned three times to produce a final zinc concentrate. The zinc scavenger tailing will pass on to the pyrite flotation and backfill preparation circuit.

7.5 Concentrate Handling

In the process described above, the zinc, copper, and lead minerals will have been concentrated and separated. The step remaining will be to separate the concentrates from the water that accompanies them in the processing. This will be done to minimize the costs associated with shipping and to minimize the water requirements for the processing of the ore.

The dewatering process will occur in three steps. First, the froth will pass to a thickener in which the solids will be allowed to settle. The thickened concentrates will be further dewatered by means of vacuum filtration, resulting in a filter cake containing approximately 15 percent moisture. The moisture content of copper concentrate probably will be low enough to be shipped without further drying. In the case of the lead and zinc concentrates, it will be necessary to dry these filter cakes to approximately 5 percent moisture for shipment.

The lead and zinc filter cakes will be dried individually in rotary concentrate dryers, which will be heated by means of fuel-fired burners. The dryers will be equipped with dust collection equipment. The dried concentrates will be transported by belt conveyors to a concentrate storage and loadout facility. Concentrate shipment will be by rail.

7.6 Pyrite Flotation and Mine Backfill Preparation

The mine backfill preparation circuit consists of the recovery of pyrite concentrates and the production of non-sulfide sand products. The final zinc flotation tailings will be separated into a pyrite concentrate and a pyrite tailing utilizing a flotation process. Figure 7.7 contains a schematic diagram of the pyrite flotation and mine backfill flowsheet. The pyrite flotation concentrate will be classified in two stages of cycloning to produce a sand product and to remove the minus 30 micron particles. The pyrite sand product will be pumped to the backfill preparation circuit where it will be combined with the sand product from the pyrite flotation tailing. The fine pyrite cyclone overflow will be pumped to the tailing disposal area.

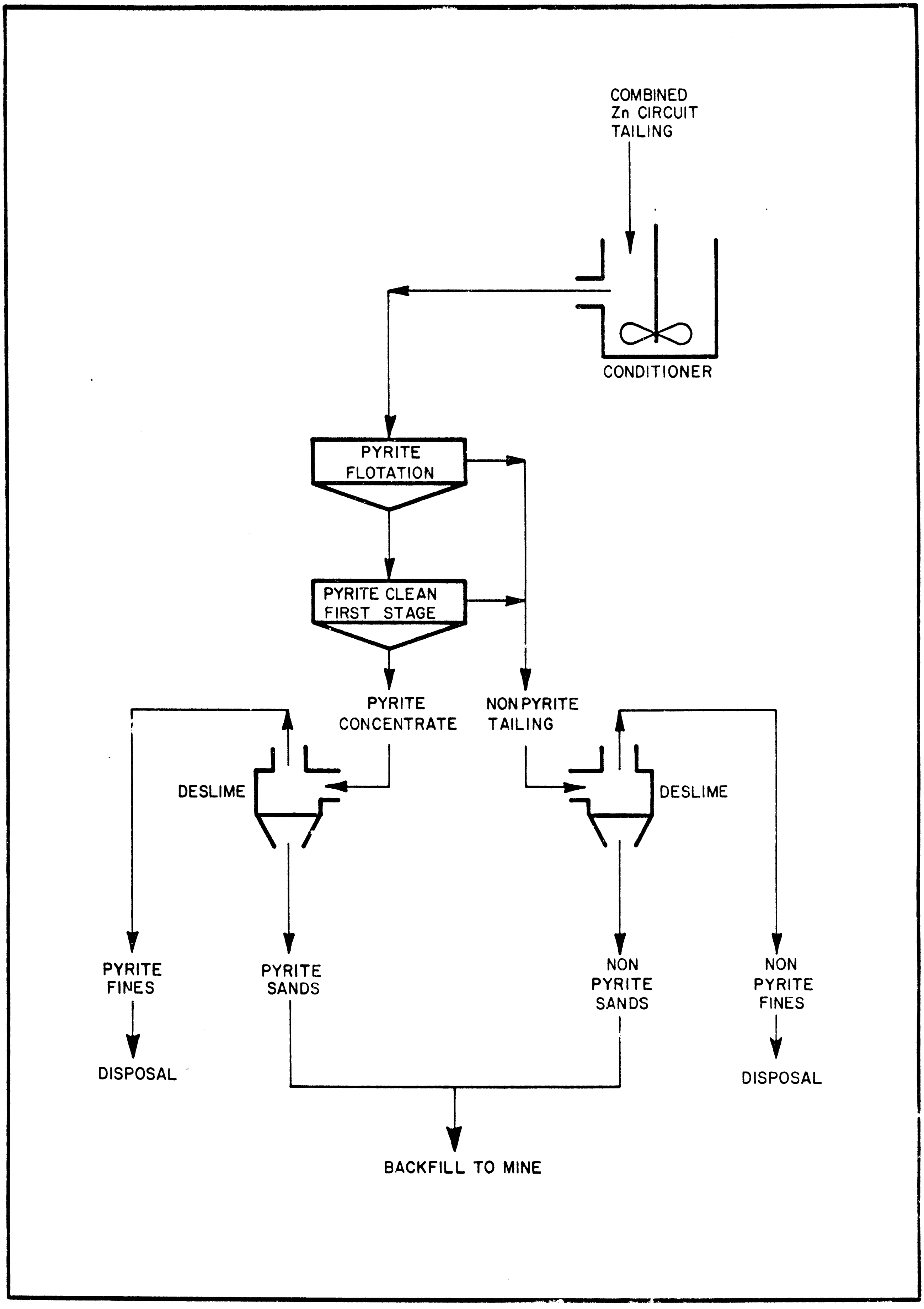

Figure 7.7 -- Schematic flowsheet of the pyrite flotation circuit which is followed by pyrite concentrate and tailing deslime steps and mine backfill circuits.

The pyrite flotation tailing will be classified in two stages of cycloning, as will be the pyrite concentrate, to produce a nonpyrite sand and a product containing the minus 30 micron nonsulfide material. The nonpyrite sand then will be pumped to the backfill preparation plant where it will be combined with the pyrite sand and cement to produce mine backfill. The mine backfill then will be pumped to the mine for deposition underground in the mined out stopes. When there are no available stopes to receive backfill, the sand product will be pumped to the waste disposal area for temporary storage. When needed, the sands will be reclaimed from the waste disposal area and returned to the mine for deposition underground.

7.7 Tailings Disposal

In addition to the three concentrates, the concentrator will produce mine backfill and two separate tailings streams. The tailings streams are the pyrite fines and the nonpyrite fines.

The nonpyrite tailing will be the largest volume of material coming from the concentrator. It consists of a stream containing approximately minus 30 micron nonsulfide fines. This material will have a consistency of talcum powder. The slurry leaves the concentrator containing approximately 10 percent solids, and will be pumped through a pipeline to a nonsulfide storage area. The slurry will be impounded behind dams, the solids allowed to settle, and the clear water decanted and sent to a reclaim water pond.

The pyrite fines, which are also approximately minus 30 microns in diameter, will be pumped to a separate cell in the tailings disposal system.

At that point, they too will be allowed to settle in a similar fashion to the nonsulfide fines. The clear water will be decanted and the solids stored in the pond area. Separate disposal of the pyrite in this fashion will permit its recovery if desired in the future.

8.0 WASTE DISPOSAL FACILITIES

8.1 General

The primary function of the waste disposal facilities will be to provide an area for safe surface disposal of the waste materials generated directly from the mining and processing of the ore, and for the treatment of water. The waste materials will be generated from the orebody and will be essentially crushed or ground rock of varying grain size. The waste disposal facilities will also serve as a water retention, reclaim, and recycle system. The following waste materials will be stored or disposed of in the facilities:

1) Sulfide tailings fines;
2) Nonsulfide tailings fines;
3) Combined sands for mine backfill; and
4) Water treatment sludge.

A simplified block diagram of the waste disposal system is shown in Figure 8.1.

8.2 Waste Disposal Siting

Dames & Moore performed a tailings disposal facility siting study for Exxon which identified and evaluated 50 possible disposal areas, and then ranked potential disposal sites. The report on this work titled, "Site Identification Studies for Disposal of Tailings, Phase I, Crandon Project", was submitted to the Wisconsin Department of Natural Resources

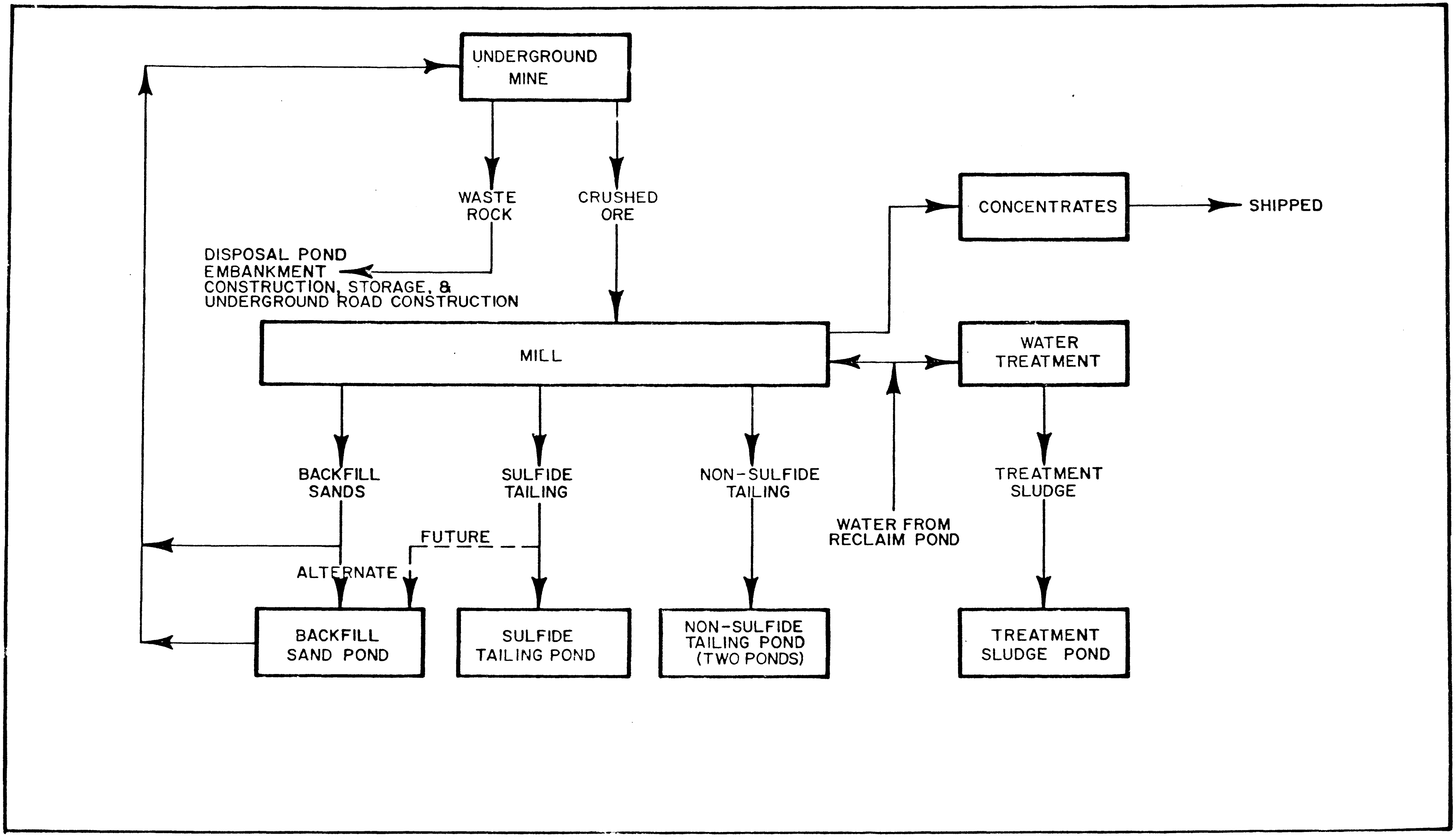

Figure 8.1 -- A generalized block diagram of the distribution of solid waste products for the proposed Crandon Project.

in January, 1979. This report provided a general overview of the characteristics of an area within a 12-mile radius of the Crandon orebody. Also, it indicated that the lands beyond this 12-mile radius were not different than those within the environmental study area.

Golder Associates performed another siting study which was designed to supplement the study by Dames & Moore, and would present another perspective on tailings disposal siting. The study area was reduced to a 5-mile radius of the orebody. Golder Associates prepared a report which described the methodology by which certain broad areas of land were excluded from consideration as disposal areas, and by which 13 potential disposal areas were identified and evaluated. The Golder Associates' report titled, "Siting Report for Disposal of Tailings, Crandon Project", was submitted to the Wisconsin Department of Natural Resources in May, 1979.

Throughout the siting studies, consideration was given to the location of lakes and wetlands, presence of certain ecological features, endangered species and unique habitats, topography, land use, regional hydrology, and disposal facility requirements.

Areas not considered to be potential disposal areas were excluded from the studies by plotting the various siting criteria onto base maps. In general, these criteria excluded those lands below 1600 foot elevation, as well as the criteria listed in the above paragraph. Application of these criteria excluded from consideration most of the area immediately around the site area as potential disposal sites. Only a small corridor of high land east and southeast of the mine site prevents the mine site from being completely surrounded by excluded lands. This is the area which has been designated site 41. Another small area of high land southwest of the mine site and south of Oak Lake was not in the excluded land and is designated site 40.

As a result of these siting studies, three potential disposal sites were identified for further detailed study and evaluation. They are as follows:

1) Site 41 located east and southeast of the mine site;
2) Site 40 located southwest of the mine site; and
3) Site 50 which incorporated parts of both sites 40 and 41 (Figures 8.2, 8.3, and 8.4 respectively).

8.3 Generation of Waste Materials

In the underground mining operation, rock will be excavated, crushed to about 150 millimeters (6 inches) or less in size, and then hoisted to the surface. The excavated rock includes both ore and waste rock. The crushed ore brought to the surface will be the raw "feed" material to the mill. When possible, the waste rock will be kept underground to fill previously mined areas and for road building; otherwise, it will be hoisted to the surface for embankment construction or disposal.

In addition to the three metal concentrates, as has been discussed previously in Section 7.0, the concentrator produces mine backfill, sulfide tailings, and nonsulfide tailings.

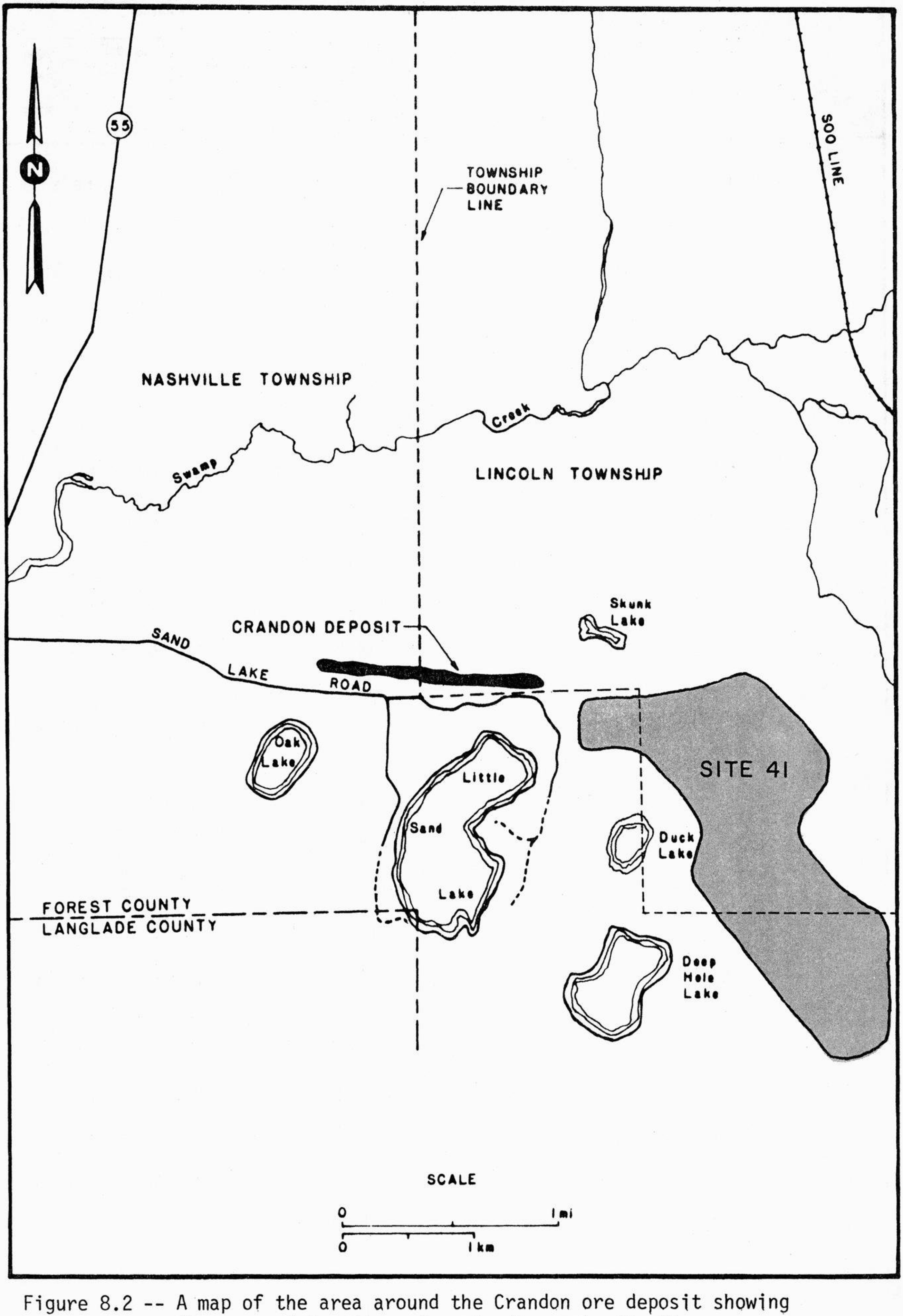

Figure 8.2 -- A map of the area around the Crandon ore deposit showing the general location of waste disposal site 41.

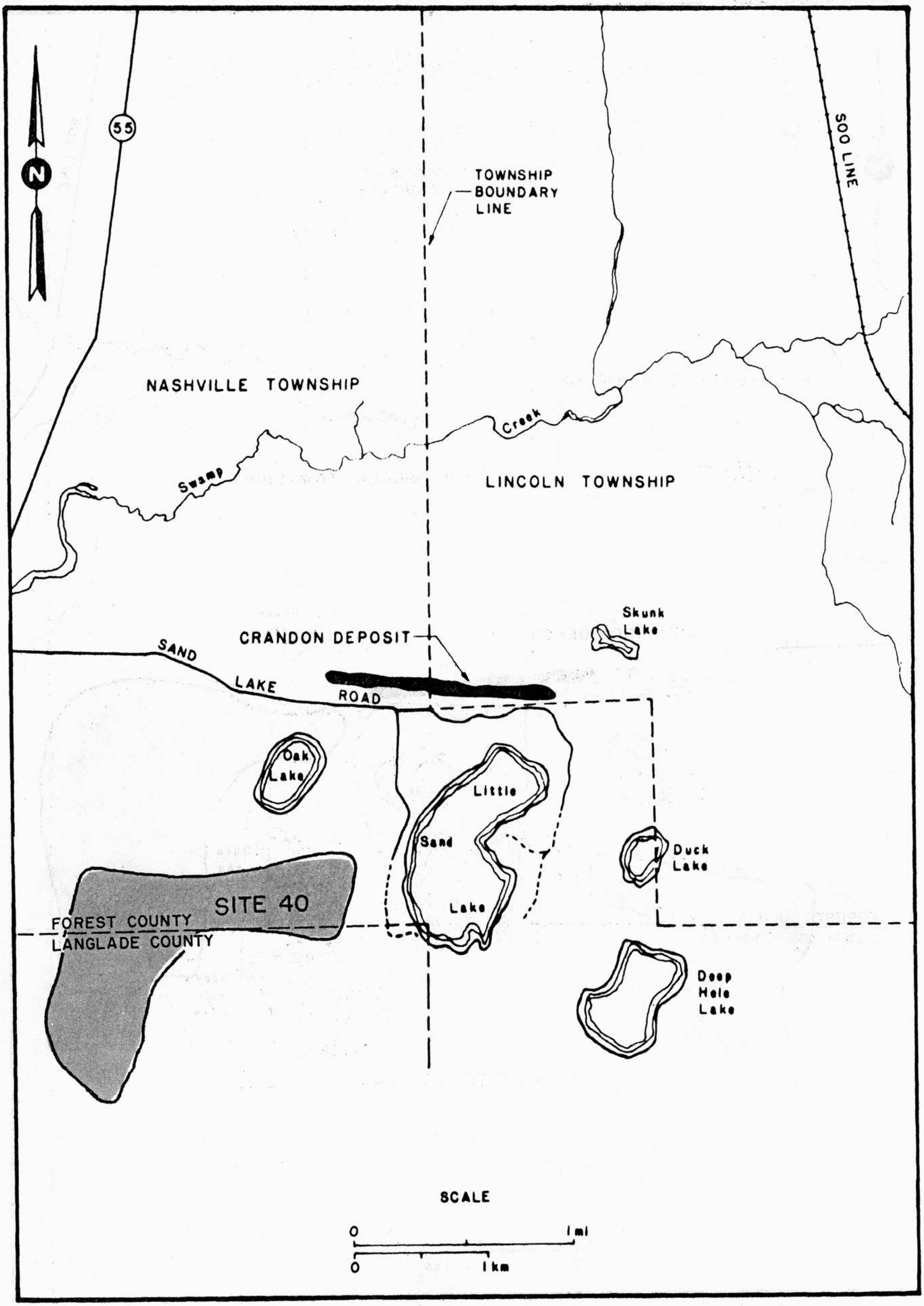

Figure 8.3 -- A map of the area around the Crandon ore deposit showing the general location of waste disposal site 40.

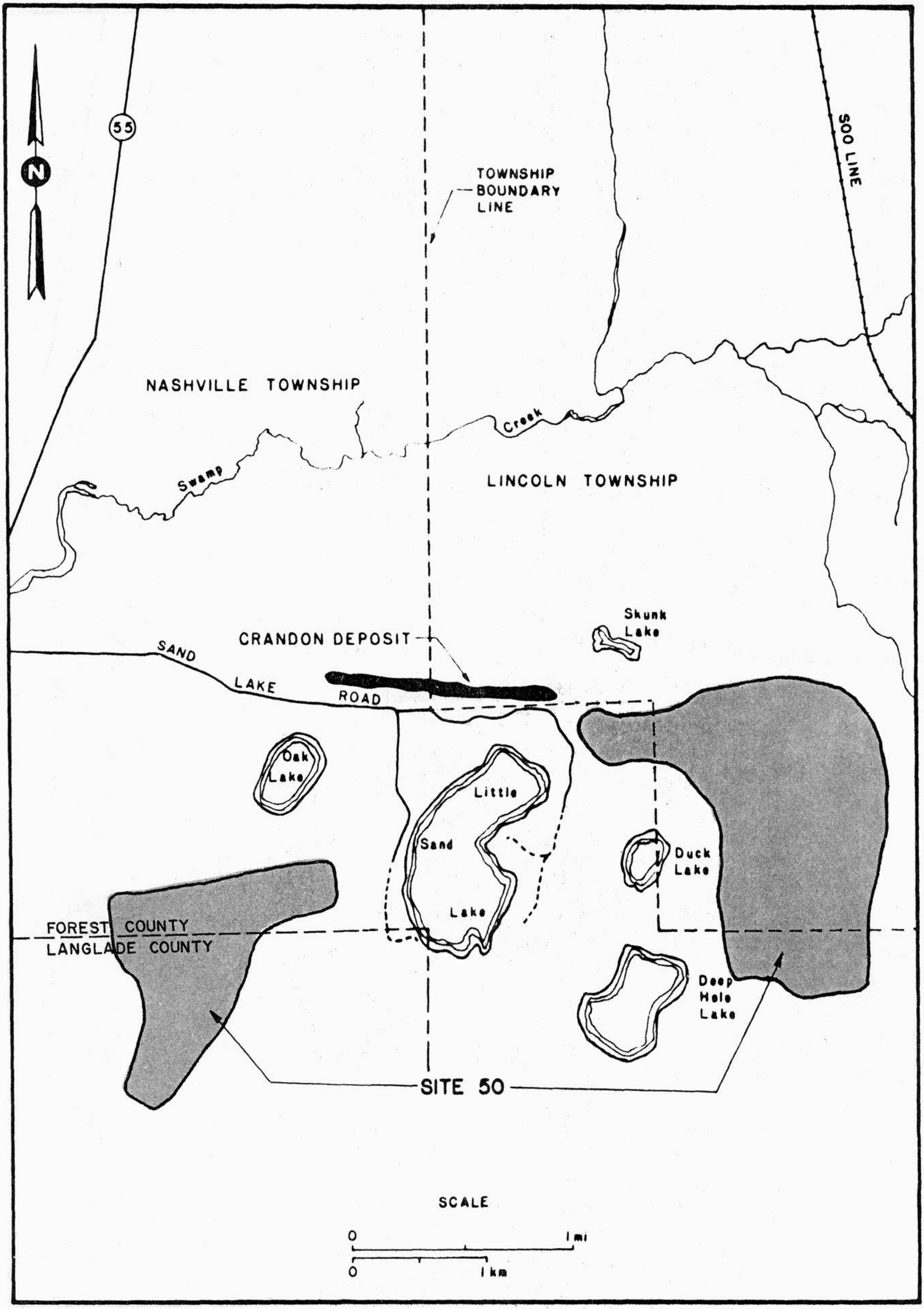

Figure 8.4 -- A map of the area around the Crandon ore deposit showing the general location of waste disposal site 50.

The combined backfill sand will be pumped from the mill as a slurry. Depending on the need for backfill in the mine, the sand will either be pumped directly to the mine or to a pond at the waste disposal facilities for temporary storage. As the need requires, those sands stored in the pond will be reslurried and pumped to the mine for backfill. It is estimated that after about 15 years of operation this storage pond will not be required for backfill sands and will be available for disposal of sulfide tailings.

The sulfide and nonsulfide tailings will be pumped from the mill as a slurry to the respective disposal ponds. In these ponds the crushed rock solids will settle.

It is anticipated that all the tailings will be stored under water in the disposal ponds to minimize oxidation of the sulfide materials and reduce fugitive dust. The reject sludge from water treatment will be placed in a separate pond in the waste disposal facility. Decant water from the waste disposal system will be incorporated in the Water Management Program which is described in Section 9.0.

8.4 Estimated Volumes of Waste Materials

The present estimate of proven reserves for the Crandon orebody is on the order of 75 million metric tons (83 million tons). To have a "safety factor" in the capacity of the waste disposal facilities, they are being sized for the potential that the mine, as we now understand the orebody, might conceivably produce as much as 100 million metric tons (110 million tons). The design contingency thus allows for a 33 percent factor above known ore reserves.

All data regarding estimated volumes of materials, production rates, and resulting size of the waste facilities for waste disposal are based on 100 million metric tons (110 million tons) and a 30-year active mine. While tonnages of ore and waste products will vary somewhat on an annual basis, a summary of the estimated volumes and production rates of the various products is shown in the following table:

Estimated Product Tonnages

	Average Daily Tons (Thousands)		Approximate % Of Mill Feed
	Metric	English	
Concentrates	1.26	1.39	14
Backfill Sands	3.96	4.36	43
Sulfide Tailings	1.32	1.46	15
Nonsulfide Tailings	2.53	2.79	28
Mill Feed Ore	9.07	10.00	100
Waste Rock	0.61	0.67	N/A

8.5 Waste Disposal Facilities Sizing

The various elements of the waste disposal facilities are sized for the specific type and volume of waste materials. The volume of most of the waste materials to be stored is much greater than the mined volume of the material because of the "swell factor". The bulk density of the stored materials will be much lower than the in-place density of the rock in the mine. The primary elements which affect the density of the materials to be stored are its specific gravity, grain size and shape, method of transportation, and method of disposition in the ponds. The estimates of storage volumes which were used for the waste disposal facilities sizing and layouts are as shown in the following table:

Pond Sizing Criteria

Product	Required Volume (Ac. Ft.)	Design Volume (Ac. Ft.)
Sulfide Tailings	5,713	4,070(1)
Nonsulfide Tailings	16,727	21,263
Backfill Sands	1,381	2,938(1)
Treatment Sludge	1,600	1,628
Reclaim Water	1,799	1,852
Totals	27,220	31,751

(1) After about 15 years operation, the backfill sand pond will be available for disposal of sulfide tailings. Therefore, the sulfide tailings disposal will be in two ponds with a combined storage capacity of 7,000 acre-feet.

In the above table, the water treatment sludge pond was sized for 1600 acre-feet of storage volume based on preliminary data from the water management studies for the Project.

After about 15 years operation, the combined backfill sand pond will be available for use as a sulfide tailings disposal pond. Therefore, sulfide tailings disposal will be in two ponds with a combined storage capacity of 7000 acre-feet. At the present time, it is planned to use waste rock brought to the surface as construction material in the dams; therefore, no specific disposal area will be provided.

8.6 Waste Disposal Facilities Design

The waste disposal facilities will be a complex system of contiguous ponds which will allow for separate disposal of the various waste materials generated by the mine, mill, and water treatment plant. Current plans are to have separate ponds to hold the sulfide tailings fines, nonsulfide tailings fines, backfill sands, and water treatment sludge. This configuration could change as further study work is completed on the facilities.

Each of the waste materials will be pumped in separate pipelines, with backup pumps and pipelines for use during servicing or in case of an emergency. For protection of the pipelines in case of power outage or other emergency, dump stations will be located in the pipelines at low points along the route. If power fails, dump valves will automatically open and drain the tailings at these locations. At this time, these stations are envisioned as having tanks to contain the dumped tailings. When power is restored, the tailings will be taken from the dump stations to a pond for disposal.

Since the waste materials will be transported as a slurry, it will be necessary to remove the excess water from the ponds after the tailings solids have settled. Two decant systems will be provided in each of the disposal ponds to remove the water and route it to the reclaim pond. Where possible, the decant will be by gravity, otherwise it will be pumped to the reclaim pond.

All of the pipelines are planned to be laid on a prepared bed, probably gravel, with an adjacent service road. The road will be a minimum of 5 meters (16 feet) in width, and the pipeline bedding will vary in width depending on the number of pipes at a given point. Where practical the pipeline corridors will be along the tops of the pond dams.

The ponds will be constructed by excavating soils from within the pond area for use as construction materials in the dams. It is also planned to use the mine waste rock in the interior of the dams or as rip-rap on the inside slope of sulfide pond dams. All pond areas will be cleared and grubbed prior to construction. It is also planned to construct the ponds in stages to the extent possible. The staged construction concepts are still under study.

The sulfide tailings fines, backfill sands, and water treatment sludge, are considered potential leachate producing materials. Studies are currently underway on the soils in the area of potential disposal ponds to determine their attenuation properties and the potential need for liners. Also, studies are being conducted on various lining materials such as clay, clay admixtures, and synthetic materials.

With the exception of waste rock, it is anticipated that all waste materials will be transported to the disposal area by pipeline. The sulfide tailings, nonsulfide tailings, and backfill sands will be slurried with water for pumping. The water treatment sludge will be generated as a pumpable material. A complete slurry transport system is planned to include pumps, pipelines, and controls, with backup equipment as required.

9.0 WATER MANAGEMENT

The systems for supplying, handling, and storing of water for use, and the possible treatment of water in an operation like the proposed Project are complex. Because of the complexities, extensive water management studies have been undertaken which will assist in the development of water policies and in the design of water facilities. Outside consultants have been retained to perform these water management studies, and they have not been completed at this time.

These water studies will assist in identifying possible sources of water, requirements for the operation and process, and water losses. The principal sources of water will probably be from wells, underground mine water, and precipitation on the waste disposal facility. Some of the main water use areas identified are process, potable, utility (in both mine and mill), sewage treatment, and fire protection. Areas of probable water loss include evaporation and seepage from the waste disposal facility, sewage treatment effluent, loss from drying and shipping the concentrates, water remaining in the tailings, and possible water discharge (Figure 9.1).

Most of the water used in the milling process will be pumped with the tailings to the waste disposal facility. In the waste disposal ponds the tailings solids will settle and the clarified water (decant water) will be continuously removed and piped to the reclaim water pond. As much of this water as practicable will be recycled for reuse in the mill as process water. These water management studies will determine whether a surplus of water will result from the overall mining and milling operations, and if so, what

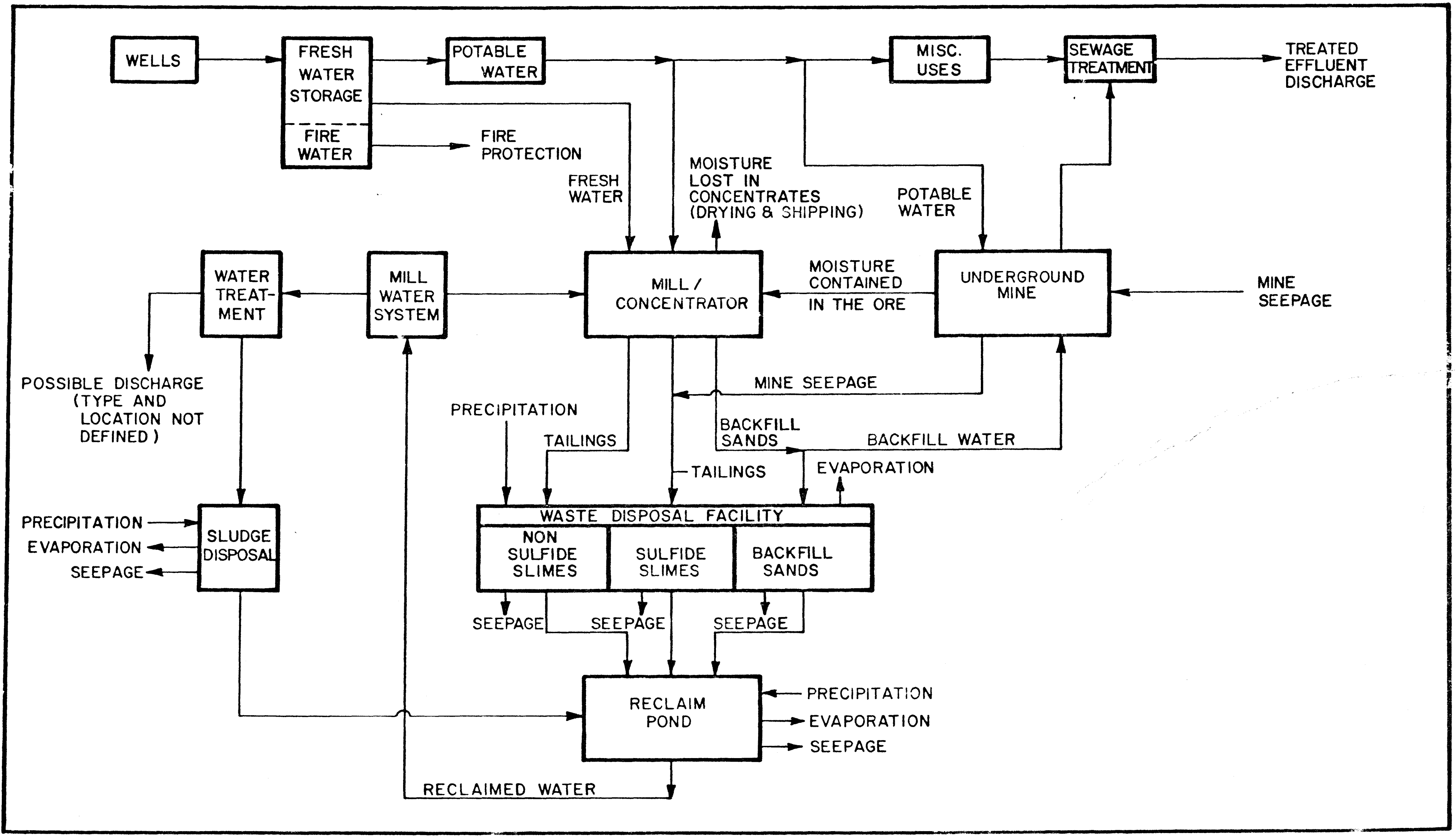

Figure 9.1 -- A simplified block diagram of possible water distribution developed for the proposed Crandon Mine/Mill Project.

provisions should be made for treating and disposing of any such surplus. Also, practical methods of water treatment will be determined.

As with other studies on the Project, extensive use is being made of computer modeling techniques in the water studies. Computer models are being developed and used to evaluate water quantity and balance, and water quality from many different streams in the operation.

10.0 ANCILLARY FACILITIES

10.1 General

The ancillary facilities are those offices, warehouses, shops, service building, fuel and explosives storage, water systems, sewage treatment, and transportation and utility facilities required to support the operation of the mine/mill process facilities (Figure 10.1). The general design objective will be to unify as many of these facilities as practical, and to locate them close to and between the mine and mill. Also, because of the winter conditions, an effort will be made to combine as many facilities as practical under one roof, or into one building.

10.2 Ancillary Buildings

10.2.1 Main Office

This office will provide space for, and will house, the required managerial and administrative functions associated with the mine/mill operations. All of the offices, storage areas, vaults, and utility areas will be provided. An environmental laboratory will be provided in the basement. A personnel tunnel will connect from the basement level to the gate house, mill building, mine operations building, and other service buildings.

10.2.2 Gate House, and Fire Truck and Ambulance Garage

These facilities will be located in a common building near the mine/mill entry gate. The gate house will function as a control point for visitors, mine/mill personnel, and vehicle traffic into the facilities. Access to the personnel tunnels will be provided through this building.

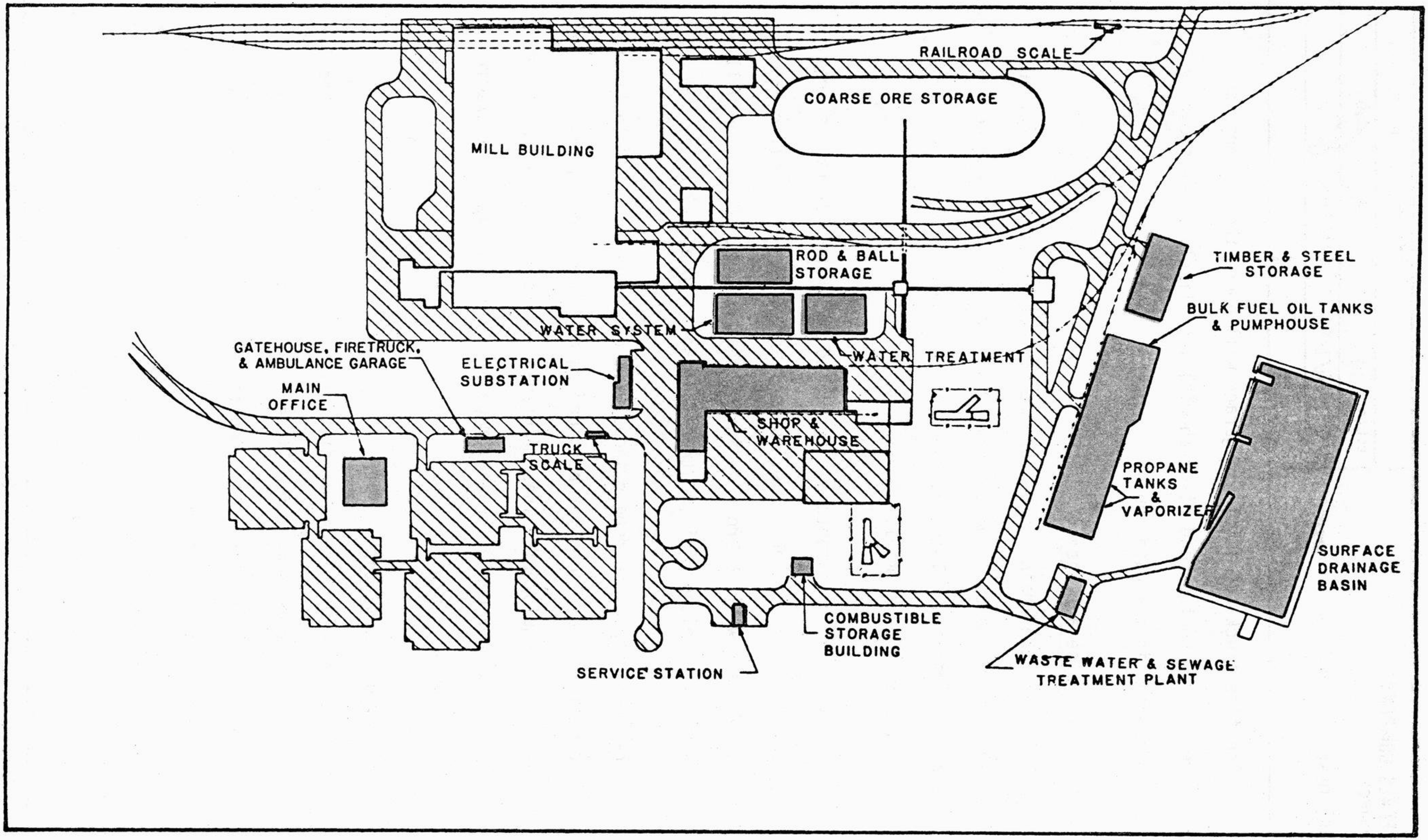

Figure 10.1 -- A schematic plan of proposed Crandon Mine/Mill facilities showing the ancillary facilities as shaded areas, and roads and parking lots, as cross-hatched areas.

The fire truck and ambulance garage will house these emergency vehicles. Control and dispatch will most likely be by security personnel in the gate house.

10.2.3 Warehouse and Shops

The warehouse, maintenance, and mechanical repair shops will be located in one building to provide service to both the mine and mill operations. This building will be located between the mine headframe and the mill.

The warehouse will contain both heated and unheated storage areas. Receiving and issuing areas, as well as offices and sanitary facilities, will be provided in the heated area. Provision will be made for either rail or truck unloading to a dock area.

The maintenance and repair shops will be designed to handle light to medium repair jobs for both underground mine and surface facilities equipment. This maintenance complex will contain electrical, carpenter, paint, machine, welding, plate, blacksmith, and automotive repair shops.

10.2.4 Combustibles Storage

The combustible storage building will be located in an isolated area away from the main facilities. This facility will serve as a storage area for such combustibles as oil and grease, and will serve both the mine and mill.

10.2.5 Service Station

The service station will provide fuel service for both diesel and gasoline powered mobile equipment. Storage tanks and pumps will be provided for both fuels.

10.2.6 Main Electrical Substation

The main electrical substation will be the point at which high voltage power will be received from the utility company, and then will be "stepped down" to a lower voltage for use in the mine/mill facilities. The main electrical substation building will house all of the main switchgear and associated equipment for distributing, controlling, and metering of power to all of the mine and mill facilities. In-plant power cables will be supplied from this building to the various facilities by way of the personnel/utility tunnels.

Also located in this building will be either diesel or gas powered generator units to provide emergency power service to selected critical underground mine equipment and mill equipment.

10.3 Water Systems

10.3.1 General

Storage tanks will be provided in a central location within the facilities for mill process water, mill water (fresh), service or utility water, potable water, and fire protection water.

Pumps for all of the water systems will be located in a pump house adjacent to the storage tanks. Water will be distributed from this facility to the various points of use by a separate pipe system for each type of water.

The mill process water will normally be recycled water, and the potable, service, and fire protection water will probably come from wells. A potable water chlorination system can be provided in the pump house.

10.3.2 Fire Protection System

A facility fire protection system will be provided which will consist of a large fire water storage tank, electric motor driven pumps, emergency diesel engine-driven pump, a pipe loop system around the facilities, hydrants, and a fire hose truck.

Each individual facility will be provided with fire house stations. Sprinkler systems will be provided in the offices, warehouses, shops, and other facilities requiring this type of protection.

10.4 Waste Water and Sanitary Sewage Treatment

10.4.1 Waste Water Treatment

Studies are presently underway to determine the water requirements for the overall mining and milling operations. These studies will also assist in determining the requisites for water treatment.

It is planned to have a waste water treatment facility located in the same general area as the water storage tanks. The type of water treatment system which will be required has not been determined at this time.

10.4.2 Sanitary Sewage Treatment

A complete sanitary sewage collection system will be provided throughout the mine/mill facilities, and the collected sewage will be routed to a treatment plant. The treated effluent from this plant will be piped to a surface seepage pond, and the sludge will be disposed by a commercial contractor. The size of the sanitary sewage treatment facility will be determined by the number of people in the workforce at the mine and mill.

10.5 Fuel Storage

10.5.1 Fuel Oil Storage

Storage tanks for fuel oil will be located in an isolated area of the site to supply the needs of the underground mobile mining equipment, the surface mobile equipment, the concentrate product drying, and heating the surface buildings. These tanks will be located within earthen dikes to provide containment of fuel oil should a tank rupture or leakage occur. Both railroad and truck access will be provided to the tank area. Fuel oil pumps will be located in a pump house for tank car and truck unloading, and for distributing the oil to points of use.

10.5.2 Propane Gas Storage

During the winter, it will be necessary to heat the mine ventilation air prior to putting it into the mine. Because of the uncertainties regarding the availability of natural gas when the mine starts production, it is planned to have propane gas available for heating the mine air. Storage tanks will be located near the fuel oil storage tanks. A propane vaporization unit and a steam generator will be housed in a building adjacent to the storage tanks.

However, if natural gas is available at the time the mine/mill starts production, it will be used for heating the mine air. In this event the propane storage facilities would not be required. Also, natural gas would be used for concentrate product drying and heating the surface buildings.

10.6 Explosives Storage

An explosives magazine and storage area will be located outside of the mine/mill perimeter fence, and at an approved distance from all other facilities. Included within a fenced security area will be a concrete slab area suitable for parking and storing trailers loaded with low yield explosive slurry. Also within this area, three buildings will be provided for storing high yield explosives and blasting caps.

The construction of and the safety distances required between the buildings within this facility will be in accordance with all applicable regulatory requirements.

10.7 Transportation Facilities

10.7.1 Railroad

Because of the quantities of concentrates that will be produced and shipped from the mine/mill facilities, a railroad system will be required to transport these products. Truck transportation of the anticipated quantity of concentrates would place a heavy burden on the highway system in the area, and the cost of truck transportation would be prohibitive.

There is a main trunk railroad line located about 3 kilometers (2 miles) northeast of the mine site. It is planned at this time that a rail spur line will be routed from this main line into the mine site (Figure 10.2). This spur line will be a single track about 5 kilometers (3 miles) long. Rail sidings will be provided near the connection point to the main line for storage, drop-off, and pickup of rail cars that will service the mine/mill.

Rail yard tracks will be provided in the mill area as required for loading concentrates, unloading materials and supplies, and for the related shipping. A railroad track scale will be provided for weighing rail cars which are loaded with concentrate, and for weighing incoming cars as required.

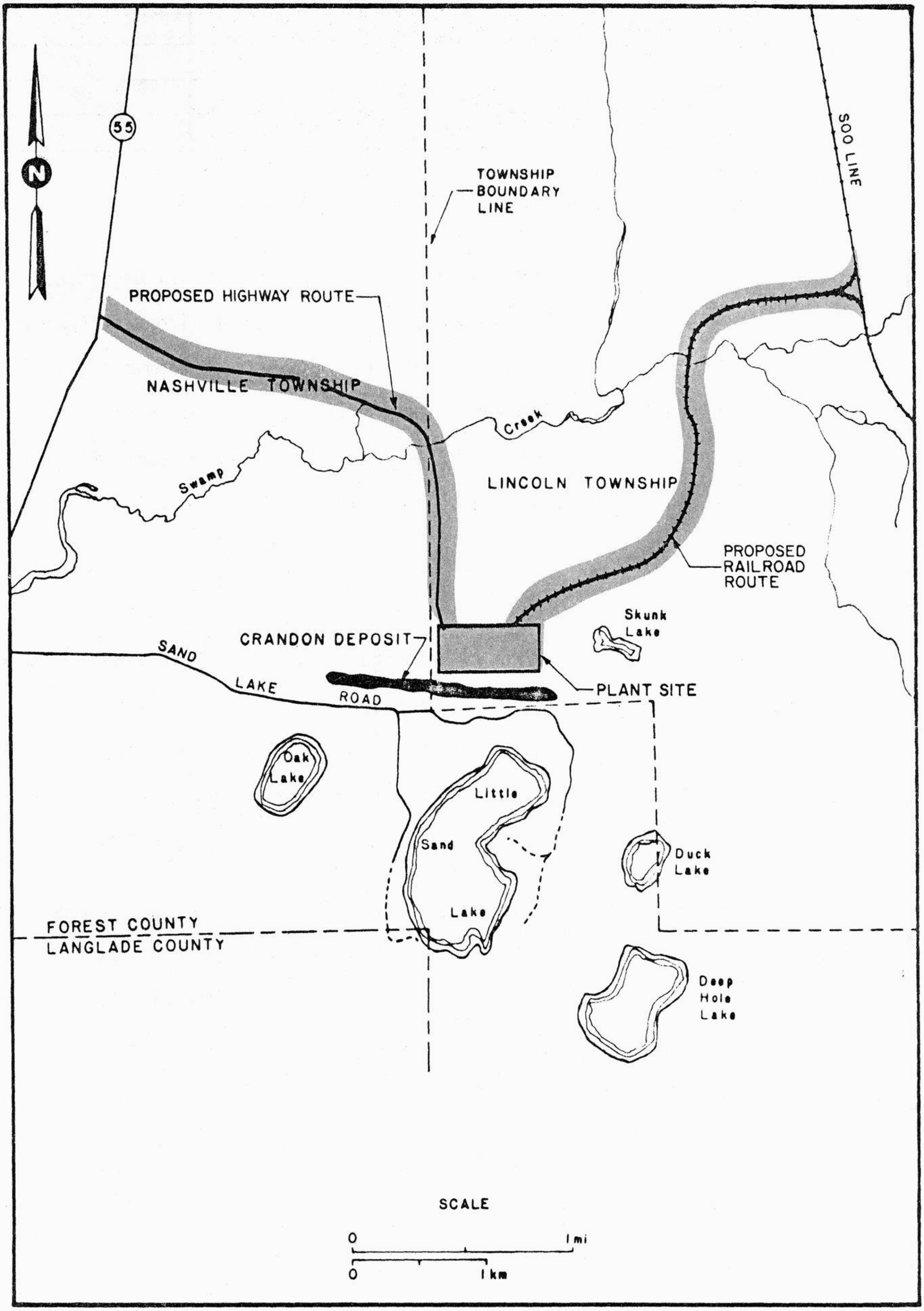

Figure 10.2 -- A location map of the Crandon ore deposit and possible mine/mill location showing proposed routes for the access road and railroad spur.

10.7.2 Access Road

The workforce required for operation of the mine/mill facilities will generate traffic into the site. The existing town roads into the area would not be adequate for this anticipated traffic, and a new access road should be provided. This new access road should be all weather, designed for maximum safety, be adequate for the traffic volume, and should connect to a main traffic artery.

State Highway 55 is located about 3 kilometers (2 miles) west of the site. It is planned to start a new access road at a point on SH 55 about 4 kilometers (2.5 miles) northwest of the site, and to route this road southeasterly into the mine/mill site. This access road will be routed in a 61 meter (200 foot) wide corridor, and it is envisioned at this time that the main electrical power line into the mine/mill will share this corridor.

10.7.3 In-Plant Roads and Parking Lots

Paved in-plant roads will be provided for vehicle access to all of the mine/mill facilities. Paved parking lots will be provided to accommodate the workforce and visitors.

A truck scale will be provided near the main entrance gate house for weighing of trucks entering and leaving the facilities, as required.

11.0 ANTICIPATED EFFLUENTS AND EMISSIONS

Potential effluents and emissions from the Project could be gaseous and particulate emissions to air, noise, and possibly a water discharge. Applicable environmental control and treatment technologies will be utilized throughout the Project to assure that all regulatory limitations are met.

Some potential effluent and emission sources include:

Potential air emission sources -- two exhaust ventilation air raises from the mine, numerous particulate collection system exhausts within the mill-surface plant complex, fuel combustion products from space heaters and concentrate dryers, and fugitive dust from vehicular traffic and material handling.

Potential water discharge sources -- treated process water and sanitary sewage treatment plant effluent water.

Potential noise sources -- the mill building complex and attendant activity, mine ventilation air heater fans, periodic yard activities, and scheduled shift change work vehicle movement.

No attempt has been made here to specifically quantify potential effluents and emissions that might result from the proposed underground mining project. As mentioned in earlier sections of this document, several engineering efforts are in progress that will generate detailed identification, characterization, and quantification estimates of potential effluents and emissions. Some of the studies which must be concluded prior to projection of anticipated effluents and emissions are:

1) Waste Management Studies;
2) Water Management Studies;
3) Hydrological/Geological Studies; and
4) Surface Engineering Studies.

As the data resulting from these studies become available, Exxon will be formulating more definitive engineering plans for construction and operation of the proposed mine/mill complex. At that time, Exxon will provide updated information on anticipated effluents and emissions for inclusion in this document.

GLOSSARY

AERATOR -- An apparatus for introducing gas under pressure into a mineral slurry.

ANOMALY -- A term applied to a departure from the normal or field characteristics commonly used in geophysical prospecting.

AQUIFIERS -- A stratum or zone below the surface of the earth that is capable of producing water, as from a well.

AUXILIARY SERVICE CAGE -- A small elevator-type conveyance operated by a single drum hoist capable of hoisting a maximum load of six (6) men or a material load of 1500 pounds.

BALL MILL -- A cylindrical-shaped steel container filled with steel balls into which crushed ore is fed. The ball mill is rotated, causing the balls to cascade, which in turn grinds the ore.

BLASTHOLE -- A hole drilled for the purpose of the containment of explosive charges which when detonated will fragment the rock in which the hole is drilled.

BLEBS -- A small inclusion of one distinctive mineral within another.

BIOLOGICAL OXIDATION -- The process by which organisms break down complex chemicals by natural means to simple chemical constituents.

CAGE -- An elevator used in a mine shaft for the conveyance of men and materials.

CONCENTRATE -- The desired product of the mine and milling process. It is normally a product containing the valuable metal from which most of the waste material in the ore has been eliminated, thereby increasing the percentage concentration of the metal bearing mineral in the ore. Concentrates are shipped to a smelter or refinery for further processing.

CONCENTRATOR -- A milling plant that produces a concentrate of the valuable minerals or metals. Further treatment is required to recover the pure metal.

CROSS-CUT -- A horizontal tunnel or passage underground at approximately right angles to the strike of a vein or rock formation.

CYCLONE CLASSIFIERS -- A device for classification by centrifical means of fine mineral particles suspended in water, whereby the coarser grains collect at, and are discharged from, the apex of the vessel, while the finer particles are eliminated with the bulk of the water at the vortex or discharge orifice.

DECANT -- The overflow product from a water slurry separation normally removed from the top of the settling apparatus or pond, while the solids settle to the bottom.

DEWATERING -- In the case of mining, dewatering refers to the draining away, pumping, or otherwise removal of water from a mine. In the case of concentrating, it is the mechanical separation of water from a mineral slurry, thus separating the slurry into solids and water.

DIP -- The angle at which an orebody, structure, or rock bed is inclined from the horizontal, measured at right angles to the strike.

DOWN-THE-HOLE-DRILLING -- That method of drilling rock where the machine utilized has an air driven hammer or impact tool located as an integral part of the drill string behind the bit within the hole.

DRAWPOINT -- A spot at the base of a stope where gravity-fed ore is loaded into hauling units.

DRIFT -- A horizontal tunnel or passage underground which normally follows the strike of a vein or rock formation.

DRILL JUMBOS -- A self-propelled platform stage or frame mounted on rubber tires which incorporates several rock drills used in driving tunnels.

DRYERS -- An apparatus for drying ore dressing products (primarily concentrates). Dryers are of various types, such as rotating kiln and multiple-hearth.

EXHAUST RAISE -- A vertical or near vertical passageway bored or blasted in rock serving as a conduit for used air.

FINES -- Very small material produced in breaking up large lumps of ore or coal. In general, the smallest particles in any classification, process, or sample or run-of-mine material. The fine fraction of the product of rock crushing is that which passes through the screen or screening device.

FLOTATION -- A part of the concentration process by which some mineral particles are induced to become attached to bubbles and float, and others to sink. In this way the more valuable minerals are concentrated and separated from other minerals or worthless gangue.

FOOTWALL -- The wall or rock on the upper side of an inclined vein or ore structure.

GANGUE -- Undesired minerals associated with ore. This is the fraction of ore usually rejected as tailing in a separating or concentrating process.

GROUNDWATER -- That part of subsurface water which is in the zone of saturation.

GYRATORY -- A widely used type of rock breaker or crusher in which an inner cone gyrates in a larger outer hollow cone by means of an eccentric system.

HANGING WALL -- The wall or rock on the upper side of an inclined vein or ore structure.

HAULAGEWAYS -- Connecting passages (cross-cuts and laterals) used for the transport of ore, waste, supplies, and movement of miners.

LATERAL -- A horizontal tunnel or passage underground that is parallel to the strike of a vein or rock formation.

LEACHATE -- A product of a chemical process for the extraction of valuable minerals from ore; also, a product of the natural process by which groundwaters and rainfall dissolve minerals by percolating through soils or other media.

LOAD/HAUL/DUMP UNITS (LHD) -- Low profile, rubber-tired, diesel or electricity powered rock moving machines similar to a fron-end loader.

LINERS -- A layer or layers of various low permeable materials, such as clay, tailings (natural) Hypalon, PVC, or polyethylene (artificial), as used to contain liquids in a waste disposal pond.

LOADING POCKETS -- A hopper used to receive, direct, and control rock or ore to a skip or self-dumping bucket suspended in a shaft.

MILK-OF-LIME -- A dilute suspension of lime hydrate in water; it has the appearance and consistency of milk.

MUCK -- Ore or rock that has been broken with the use of explosives.

NONPYRITE -- In the case of the Crandon concentrator, nonpyrite refers to the flotation process tailings product after the pyrite flotation step.

OPEN STOPING -- A method of ore extraction where no artificial methods of support are employed. The walls and roof are self supporting and the entire block is removed from wall to wall without leaving any pillars.

ORE -- A mineral or aggregate of minerals from which a valuable constituent, especially a metal, can be profitably mined or extracted.

ORE PASSES -- Steeply dipping passageways bored in rock for the purpose of transporting ore through the use of gravity flow to lower elevations.

OXIDATION -- A chemical reaction caused by natural forces that results in a change in the composition of a mineral.

PYRITE -- A common sulphide mineral, shiny and yellow in color, composed of sulphur and iron, sometimes known as "fool's gold." Contains 46.7 percent iron, 53.3 percent sulfur.

QUARTZ -- Crystallized silicon dioxide SiO_2 - a mineral. The name of the mineral is prefixed to the names of many rocks that contain it, as quartz porphyry, quartz diorite.

RAISEBORE -- To raise bore is the act of utilizing a drilling machine fitted with a tri-cone bit to bore or cut a vertical or near vertical passageway in rock.

REAGENT -- A chemical or solution used to produce a desired chemical reaction; a substance also used in assaying or in the flotation process. In ore dressing applications, reagents are used to mean those chemical solutions used in the ore treatment process.

REAGENT DECAY -- The process by which reagents used in the concentrator breakdown through any number of methods, i.e., oxidation, action of ultraviolet light, or through other reagent additions.

RECLAIM WATER -- Water used within the mining and milling operations that will be retained and recycled for reuse within the various project operations.

ROCK -- Any naturally formed mineral mass or aggregate that constitutes a significant part of the earth's crust.

ROCK MECHANICS -- That branch of engineering science concerned with the measuring and monitoring of physical rock properties and the application of this knowledge to the design and construction of underground openings.

ROD MILL -- A rotating cylindrical mill which employs steel rods as a grinding medium.

SCAVANGER FLOTATION -- A secondary flotation operation which recovers most of the minerals remaining following initial rougher flotation to produce a low grade concentrate. This low grade concentrate from scavenger flotation is frequently combined with new feed to rougher flotation. The purpose of scavenger flotation is to maximize mineral recovery.

SEEPAGE -- A quantity of a fluid that seeps or passes through permeable material.

SHEAVE -- A wheel, grooved around its circumference, that guides and supports a cable between the load and the hoisting engine.

SKIP -- A self-dumping type of bucket used in a shaft for hoisting ore or rock.

SILICIFIED -- That material into which silica has been introduced or replaced through natural processes.

SLIMES -- Material of extremely fine particle-size, encountered in ore treatment. Primary slimes are extremely fine particles derived from ore, associated rock, clay, or altered rock. Secondary slimes are very finely ground minerals from the ore.

SLOT RAISES -- A vertical or near vertical excavation extending the full height within a stope forming a cavity into which additional ore can be blasted.

SLUDGE -- Sludge may have two meanings in the minerals industry:

-- The mud and cuttings made by diamond or churn-drill bit, and carried to the surface by the uprising stream of water.

-- The product of chemical treatment of waters produced from mining, milling, and tailings storage.

SLURRY -- A mixture of finely divided mineral and rock particles and water.

STOPE -- An excavation in a mine from which ore is being or has been extracted in a series of steps.

STOPE BLOCKS -- A three dimensional column of ore delineated for the purpose of extracting ore.

STRIKE -- The course or bearing of an inclined orebody or rock structure on a level surface, i.e., perpendicular to the direction of the dip.

SUBLEVELS -- A secondary level primarily used as a platform for drilling and blasting in operating stopes.

SURGE CAPACITY -- The capacity of a storage hopper or bin as installed below the crusher to provide uniform feeding of a transfer belt located below the bin.

SUSPENDED PARTICULATE -- Particles that remain suspended in a water medium in preference to settling out. Also, a measurement of particles remaining with the water phase after a particular separation step in the concentrating or water treatment process.

TAILINGS -- Material rejected from a concentration process after the recoverable valuable minerals have been extracted.

VACUUM FILTRATION -- The separation of solids from liquids by passing the mixture through a filter with the aid of a partial vacuum to increase the rate of filtration.

WASTE ROCK -- Barren rock in a mine, or at least material that is too low in mineral grade to be of economic value.

WATER MANAGEMENT -- The practice of planned handling or controlling of all process and associated waters of a manufacturing or processing facility.